**UNIVERSIDADE FEDERAL DE ITAJUBÁ**

**INSTITUTO DE RECURSOS NATURAIS**

**DISSERTAÇÃO DE MESTRADO**

# IDENTIFICAÇÃO DOS FLUXOS ENERGÉTICOS (ORIGEM, DESTINO E INTENSIDADE) EM SISTEMAS ELÉTRICOS DE POTÊNCIA

Autor: Ricardo Alexandre Passos da Cruz

Orientador: Afonso Henriques Moreira Santos

Co-Orientador: Edson da Costa Bortoni

Itajubá, Agosto de 2009

**UNIVERSIDADE FEDERAL DE ITAJUBÁ**

**INSTITUTO DE RECURSOS NATURAIS**

**DISSERTAÇÃO DE MESTRADO**

# IDENTIFICAÇÃO DOS FLUXOS ENERGÉTICOS (ORIGEM, DESTINO E INTENSIDADE) EM SISTEMAS ELÉTRICOS DE POTÊNCIA

Autor: Ricardo Alexandre Passos da Cruz

Orientador: Afonso Henriques Moreira Santos

Co-Orientador: Edson da Costa Bortoni

Curso: Mestrado em Engenharia da Energia

Área de Concentração: Planejamento e Gestão de Sistemas Energéticos

Dissertação submetida ao Programa de Pós-Graduação em Engenharia da Energia como parte dos requisitos para obtenção do Título de Mestre em Engenharia da Energia.

Itajubá, Agosto de 2009

MG – Brasil

Ficha catalográfica elaborada pela Biblioteca Mauá –
Bibliotecária Margareth Ribeiro- CRB_6/1700

C957i

Cruz, Ricardo Alexandre Passos da
Identificação dos fluxos energéticos (origem, destino e intensi_ dade) em sistemas elétricos de potência / Ricardo Alexandre Passos da Cruz. -- Itajubá, (MG) : [s.n.], 2009.
63 p. : il.

Orientador: Prof. Dr. Afonso Henriques Moreira Santos.
Co-orientador: Prof. Dr. Edson da Costa Bortoni.
Dissertação (Mestrado) – Universidade Federal de Itajubá.

1. Fluxos energéticos. 2. Matriz de impacto. 3. Mercado de ener_ gia. 4. Fluxo de carga. I. Santos, Afonso Henriques Moreira, orient. II. Bortoni, Edson da Costa, co-orient. III. Universidade Federal de Itajubá. IV. Título.

# DEDICATÓRIA

A Deus, que me permitiu chegar até aqui com saúde, inteligência e sabedoria suficientes para desenvolver esse trabalho, estando sempre ao meu lado em todos os momentos, guiando-me e dando força para lutar.

A toda minha família, especialmente minha mãe Júlia, meu pai Márcio, meus irmãos Luiz Gustavo e Katiane, que sempre confiaram em mim e me deram enorme apoio. A eles, minha homenagem, meu amor e minha gratidão.

A minha esposa Juliana, pela companhia durante esta jornada. Obrigado pela compreensão, amizade, carinho e amor.

*Sábio não é aquele que demonstra sabedoria em suas palavras,*
*mas aquele que demonstra sabedoria em seus atos.*

# AGRADECIMENTOS

Ao meu orientador e mestre Prof. Dr. Afonso Henriques Moreira Santos, pelas valiosas sugestões e orientações que contribuíram para o desenvolvimento e enobrecimento do trabalho. Um verdadeiro amigo, companheiro e segundo pai, por quem tenho grande admiração e respeito, que sempre me ajudou de forma incontestável para o meu crescimento profissional e pessoal. A alma deste trabalho concentra-se na sua imensa criatividade.

Ao co-orietador Edson da Costa Bortoni, meu agradecimento pelo tempo dedicado, incentivo e valiosa co-orientação científica.

Aos amigos eternos, Leopoldo e Marco Aurélio, que me deram inúmeras contribuições de cunho pessoal e profissional.

Aos meus amigos de república e de mestrado, Deyvid, Vágner, Carol, Rodrigo, Ricardo e Yasmine, pela companhia durante a caminhada.

A todos os colegas de trabalho da iX, pelo apoio, incentivo e companheirismo, tanto nas horas boas quanto nos momentos complicados.

Finalmente, gostaria de agradecer à Universidade Federal de Itajubá, pela oportunidade de aprimorar meus conhecimentos em energia e eletricidade, através de todo o apoio proporcionado e que foi de fundamental importância para a conclusão desta tese.

# RESUMO

Nos estudos elétricos de fluxo de carga, os cálculos desenvolvidos não permitem saber de onde vem a energia que alimenta cada carga. Sabem-se somente os fluxos de potência nas linhas, sem que as mesmas estejam "carimbadas" ou "coloridas". Saber de onde vem a energia, ou, de maneira dual, de onde não vem, pode ser uma informação importante para a alocação de reforços de geração (térmica principalmente), face a mudanças de critérios operativos, restrições ambientais ou face a riscos hidrológicos.

No presente trabalho é apresentada uma modelagem para o cálculo do impacto em cada uma das barras, de um determinado sistema elétrico de potência, face a impactos sobre a energia firme de cada uma das centrais. Desenvolveu-se um modelo de fluxo energético, partindo-se do fluxo de carga, teórico ou real, que permite identificar a origem da energia afluente a cada ponto, permitindo, assim, saber o peso de cada geração sobre a respectiva barra.

Utilizou-se Programação Linear como ferramenta matemática para a solução do problema. Este, por sua vez, consiste em minimizar a somatória dos fluxos energéticos em todos os ramos, pois não tem sentido haver circulação adicional de energia, causando perdas desnecessárias. Denomina-se isto de "mínima entropia", pois maior circulação de energia promove aumento da entropia. As restrições são divididas em restrições de barra, onde a soma das energias que chegam e saem deve ser zero; nas linhas, a soma dos fluxos energéticos das diferentes gerações deve ser igual ao fluxo calculado ou medido.

Chega-se à denominada "Matriz de impacto", onde as linhas e colunas são respectivamente "carga" e "geração", e seus elementos o peso de cada geração no atendimento de respectiva carga.

Para facilitar a análise e o próprio tratamento numérico, desenvolveu-se uma técnica de redução do sistema elétrico, que permite agregar as barras, focando naquelas de maior interesse.

# ABSTRACT

In the load flow electric studies, the calculations developed don't allow to know the origin of energy that feeds each load. It is possible to know only the loads flow in the lines, these not being "colored" or "stamped". Knowing where the energy comes from or in a dual way to know where it does not come, can be a important information for reinforcements of generation allocation (thermal generation mainly), face the changes of operative criteria, ambient restrictions or face to hydrological risks.

This thesis presents a modeling for the impact calculation on each power system bus, in a determinate electrical system of power face to impacts caused by the power variation of a generation plant. A model for energy flow was developed from a conventional power flow. With this model it is possible to identify the origin of the firm energy on each bus due to the variation mentioned. Then, the contribution of any generation plant over any bar can be calculated.

A linear programming was used as mathematic tool for solution of the problem. This consists in minimizing total of energy flows in all branches, as it is nonsense to have additional energy circulation causing unnecessary losses. We call this " minimum entropy" as additional energy circulation causes entropy increase. Restrictions are divided in bus restrictions, where total of coming and outgoing energy must be zero; in lines, total several generations energy flows must be equal to calculated or measured flow.

It results the called "impact matrix", where lines and columns are "load" and "generation" respectively, and its elements being weight of each generation in respective load supplying.

To make easy analysis and numerical treatment itself, a technique for electric system reduction has been developed, allowing to add bus focusing those of major interest.

# SUMÁRIO

1 INTRODUÇÃO ..... 1
2 REVISÃO BILBIOGRÁFICA ..... 5
2.1 Fluxo de Potência Convencional ..... 6
2.2 Fluxo de Carga Linearizado (DC) ..... 9
2.3 O problema de Despacho Econômico (DE) e o conceito de Fluxo de Potência Ótimo (FPO) ..... 10
3 PROPOSTA METODOLÓGICA ..... 18
3.1 Metodologia proposta ..... 18
4 ESTUDOS DE CASO ..... 30
4.1 Fluxo Energético no Sistema Fictício ..... 30
4.2 Fluxo Energético no Sistema Teste IEEE 14 Barras ..... 37
4.3 Fluxo Energético no Sistema de 500 kV da Bacia do Paraná ..... 43
5 CONCLUSÕES E RECOMENDAÇÕES ..... 58
6 REFERÊNCIAS BIBLIOGRÁFICAS ..... 59
ANEXO 1 Dados do ONS ..... 63

# LISTA DE FIGURAS

Figura 1 – SEP completo .....19
Figura 2 – SEP com a região de interesse .....20
Figura 3 – Sistema de interesse .....21
Figura 4 – Loop de energia em uma malha .....21
Figura 5 – Fluxograma do modelo .....27
Figura 6 - Sistema elétrico de potência fictício .....31
Figura 7 – Sistema Elétrico de Potência com a solução .....36
Figura 8 – Sistema IEEE 14 barras .....38
Figura 9 – Sistema IEEE 14 barras simplificado .....39
Figura 10 - Fluxograma da geração do SIN Fonte: ONS, 2008.....45
Figura 11 – Bacias hidrográficas no Brasil e usinas em estudo .....49
Figura 12 – Localização das usinas em estudo na Bacia do Paraná .....50
Figura 13 - Fluxo de carga da Bacia do Paraná nas barras de 500 kV .....51

# LISTA DE TABELAS

Tabela 1 – Características do sistema fictício .....35
Tabela 2 – Percentagens das gerações em cada LT .....35
Tabela 3 – Matriz de Impacto (Gerações chegando às barras em %) .....37
Tabela 4 - Contribuições das gerações em cada LT .....41
Tabela 5 - Gerações chegando às barras, em MW .....41
Tabela 6 – Matriz de Impacto (Gerações chegando nas barras em %) .....42
Tabela 7 - Distribuição das UHEs nas bacias hidrográficas .....43
Tabela 8 – Barras do sistema de 500 kV .....46
Tabela 9 - Linhas de Transmissão .....47
Tabela 10 - Percentagens das gerações em cada LT .....53
Tabela 11 - Gerações chegando às barras, em MW .....55
Tabela 12 - Matriz de Impacto (Gerações chegando nas barras em %) .....56

# SIGLAS

DC – Direct Current

DE – Despacho Econômico

DRP – Despacho e Redespacho Programado

EPE – Empresa de Pesquisa Energética

FACTS – Flexible AC Transmission System

FPO – Fluxo de Potência Ótimo

ONS – Operador Nacional do Sistema Elétrico

PDEE – Plano Decenal de Expansão de Energia Elétrica

SEP – Sistema Elétrico de Potência

SIN – Sistema Interligado Nacional

UHE – Usinas Hidrelétricas

# 1 INTRODUÇÃO

As ferramentais usuais de planejamento energético se baseiam em otimizações, que muitas vezes se distanciam da realidade dos sistemas, notadamente por não incorporar restrições, como as externalidades ambientais e sociais. Nem por isto deixam de ser importantes. Ao se planejar a operação da geração, por exemplo, emprega-se o conceito de se igualar os custos marginais, para atender o princípio de “máximo lucro”. Três são as fragilidades deste critério: o primeiro se refere às características da rede, que ‘deformam” este princípio, impondo perdas e restrições. Segundo, o estabelecimento dos custos marginais não são evidentes, notadamente nas hidrelétricas, quando se emprega metodologias que, em síntese, valoram a água com base no custo de oportunidade (valor das térmicas). Os custos das térmicas já contém imprecisões significativas, que , levados às hidrelétricas, incorporam ainda mais falhas. Finalmente, o critério de máximo lucro, que leva a se ter (utopicamente) custos marginais iguais, se baseia na competição pura. Nesta situação a entrada de novos agentes na competição se daria de forma natural, pois o preço estaria acima do valor médio, remunerando a valores superiores à taxa de atratividade estabelecida. A medida que outros entram, a taxa se reduz, tendendo à taxa de atratividade, que é quando se tem preço igual a custo marginal e igual a custo médio. Enfim, toda otimização é parcial e, de certa forma, tendenciosa. De outra parte, as empresas não podem vender, a não ser no curto prazo, abaixo de seu custo médio, pois não paga seus custos de capital e operacional.

Assim, busca-se neste trabalho saber de onde vem a energia elétrica suprida a determinada carga – ou de onde não vem. Conhecendo-se isto, pode-se, dentre outras coisas, calcular: o custo da energia suprida, que seria o custo de cada parcela, ponderado pelos respectivos volumes; a área de influência de cada geração, podendo-se, por exemplo, estabelecer limites de submercados; a sensibilidade de certa região (barra ou conjunto de barras) a variações ou restrições em determinadas gerações.

O objetivo é, portanto, entender a logística do suprimento em cada barra. Ou seja, para uma determinada condição operacional, que pode ser resultado de um estudo teórico ou de uma medição real, busca-se “colorir os elétrons”, sabendo de onde vem e para onde vai a energia elétrica. Buscou-se na literatura algo semelhante, mas não se encontrou. Talvez por não ter se percebido o potencial de tal informação. Acredita-se que os usos potenciais, daí decorrentes, sejam bem maiores que os percebidos até então. Mas explorar esses usos não foi o objetivo desta dissertação.

Atualmente, os cálculos realizados em estudos elétricos de fluxo de carga não definem qual geração, podendo ser uma ou várias, supre cada carga. O que se sabe na verdade são os fluxos de potência nos ramos (ou linhas). Tão relevante quanto conhecer de onde vem a energia, é, de forma dual, de onde não vem, tornando-se uma informação de suma importância para que haja a alocação de reforços de geração (fundamentalmente centrais termelétricas), pois várias restrições e/ou riscos podem ocorrer, tais como:

- Mudança de critérios operativos (manutenção preventiva ou corretiva em uma máquina de uma dada usina);
- Restrições de natureza ambiental (implantação de novas usinas);
- Riscos hidrológicos (falta de chuvas).

A modelagem que será apresentada baseia-se no cálculo do impacto existente em cada uma das barras (ou nós) de um sistema elétrico de potência - SEP, ou seja, o quanto que cada geração impacta a energia firme de cada central. Entende-se por energia firme de uma central, o montante de energia que ela pode produzir em um período tão seco quanto o “período crítico” do sistema interligado nacional – SIN, que ocorreu de maio de 1952 a novembro de 1956, registrando a pior seqüência de vazões do histórico.

O ponto de partida para a simulação desenvolvida foi o *load flow* (fluxo de carga convencional), o qual permite identificar a origem da energia afluente (energia

que chega) a cada ponto. Conseqüentemente, pode-se saber o peso de cada geração sobre a respectiva barra.

Utiliza-se a Programação Linear como ferramenta para resolver esta questão, sendo que a função objetivo busca captar o princípio da mínima entropia: não há circulação desnecessária de energia na malha, ou seja, a função objetivo utilizada no processo é a minimização da soma de todos os fluxos energéticos. Os balanços de energia e as Leis de Kirchoff já foram atendidos pelo estudo inicial de fluxo de carga, de onde se calcula o fluxo energético.

Diferentemente dos fluxos em redes, que são calculados com base em potências das centrais, impedâncias das linhas e perdas, os fluxos energéticos estão relacionados com a participação (ou contribuição) de cada geração em linhas ou barras.

Portanto, o objetivo deste trabalho é de verificar quais barras de um dado sistema elétrico de potência estão sendo fortemente impactadas, através da metodologia apresentada para o cálculo dos fluxos energéticos. Assim, será possível, primeiramente, saber quais as regiões mais sensíveis, e, posteriormente, atuar no sentido de alocar reforços de geração. Diante disso, este estudo permite uma grande contribuição na área de planejamento da operação energética.

Este capítulo apresenta uma breve introdução, onde são descritas a motivação principal deste trabalho, a contextualização, o objetivo e a organização da tese apresentada.

O capítulo 2 descreve uma revisão bibliográfica acerca de fluxos de potência convencional e linearizado DC, bem como do fluxo de potência ótimo e sua relação com o despacho econômico de usinas. Todos estes tipos de fluxos em redes são bem conhecidos e utilizados atualmente.

A grande contribuição deste trabalho encontra-se no capítulo 3, onde é apresentada a proposta metodológica. Comenta-se, primeiramente, a técnica de redução de sistemas, bastante interessante e correta, que permite reduzir um sistema elétrico de maior porte, antes de se aplicar o método proposto.

No capítulo 4 são abordados três estudos de caso, sendo um fictício, um acadêmico e o outro real. Este último corresponde ao sistema elétrico de 500 kV da Bacia do Paraná. A princípio, pretendia-se simular todo o sistema composto pela Bacia do Paraná, mas de posse das grandes dimensões existentes, esta análise foi simplificada, através da técnica de redução de sistemas.

O capítulo 5 aborda as considerações finais do presente trabalho e, ainda, as possíveis recomendações para trabalhos futuros.

Finalmente, estão contidas no capítulo 6 todas as referências bibliográficas utilizadas e que foram de notável valia para a conclusão dessa dissertação.

Além dos capítulos, há o Anexo 1 no final do texto, sendo de grande importância colocá-lo para demonstrar o arquivo de dados utilizado durante o trabalho.

# 2 REVISÃO BILBIOGRÁFICA

Neste item será apresentada, inicialmente, uma introdução sucinta sobre o fluxo de carga convencional, ou *load flow*, e, posteriormente, sobre o fluxo de carga linearizado DC. Em seguida, dar-se-á ênfase ao fluxo de potência ótimo - FPO, o qual se relaciona ao denominado problema de despacho econômico. É oportuno comentar que toda a metodologia utilizada nesta dissertação tem como base o fluxo de potência calculado ou medido, ou seja, parte-se deste fluxo para o cálculo das contribuições em cada linha de transmissão e do impacto em cada barra de um sistema elétrico.

Haffner (2007) explica que a avaliação do desempenho das redes de energia elétrica em condições de regime permanente senoidal é de grande importância tanto na operação em tempo real do sistema quanto no planejamento de sua operação e expansão. Entre as informações a serem determinadas para uma condição definida de carga e geração se destacam as seguintes:

- O carregamento das linhas de transmissão e transformadores;
- O carregamento dos geradores;
- A magnitude da tensão nas barras;
- As perdas de transmissão;
- O carregamento dos equipamentos de compensação de reativos (síncronos e estáticos).

A partir destas informações, é possível definir propostas de alterações a serem implementadas no sistema, com objetivo de tornar a sua operação mais segura e econômica. Entre as alterações possíveis na operação do sistema se destacam:

- Ajuste no despacho dos geradores;

- Ajustes nos dispositivos de controle de tensão (injeções de potência reativa, posição dos taps dos transformadores e status dos bancos de capacitores e reatores);
- Ajustes no intercâmbio com os sistemas vizinhos;
- Mudanças na topologia (ligar ou desligar alguma linha de transmissão ou transformador).

Por outro lado, entre as alterações possíveis no planejamento da expansão do sistema se destacam:

- Instalação de novas plantas de geração;
- Instalação de novas linhas de transmissão e transformadores;
- Instalação de dispositivos de controle do fluxo de potência (Flexible AC Transmission System - FACTS);
- Interconexão com outros sistemas.

## *2.1 Fluxo de Potência Convencional*

Segundo Monticelli (1983), o cálculo do fluxo de potência, ou fluxo de carga, em redes de energia elétrica consiste essencialmente na determinação do estado de operação desta rede dada sua topologia e certa condição de carga. Este estado de operação consiste na:

- Determinação das tensões e ângulos para todas as barras do sistema;
- Determinação dos fluxos de potência ativa e reativa através das linhas do sistema;
- Determinação das potências ativas e reativas, geradas, consumidas e perdidas nos diversos elementos do sistema.

O modelo do fluxo de carga é formulado através de um sistema de equações e inequações algébricas não lineares. As equações básicas do fluxo de carga são obtidas impondo-se a conservação das potências ativa e reativa em cada barra.

Lescano (2004) diz que na formulação básica do problema, as injeções de potência ativa e reativa podem ser expressas, respectivamente, como nas equações (1) e (2):

$$P_k = V_k \sum_{m \in K} V_m (G_{km} \cos\theta_{km} + B_{km} \operatorname{sen}\theta_{km}) \tag{1}$$

$$Q_k = V_k \sum_{m \in K} V_m (G_{km} \operatorname{sen}\theta_{km} - B_{km} \cos\theta_{km}) \tag{2}$$

Onde:

$V_k$ é a magnitude da tensão nodal (barra *k*)

$P_k$ é a injeção liquida (geração menos carga) de potência ativa

$Q_k$ é a injeção liquida de potência reativa

*K* é o conjunto de todas as barras adjacentes à barra k incluindo a própria barra *k*

*G* e *B* são as matrizes condutância e susceptância de barra, respectivamente

$\theta_{km}$ é a abertura angular sobre a linha *k-m*

No caso de uma linha de transmissão, os fluxos de potência ativa e reativa são dados pelas seguintes expressões (3) e (4):

$$P_{km} = V_k^2 g_{km} - V_k V_m g_{km} \cos\theta_{km} - V_k V_m b_{km} \operatorname{sen}\theta_{km} \tag{3}$$

$$Q_{km} = -V_k^2 g_{km} + V_k V_m b_{km} \cos\theta_{km} - V_k V_m g_{km} \operatorname{sen}\theta_{km} \tag{4}$$

Onde:

$g_{km}$ e $b_{km}$ são a condutância e susceptância da linha que une a barra k à barra m, respectivamente.

O cálculo do fluxo de carga é, em geral, realizado utilizando métodos computacionais desenvolvidos especificamente para a resolução desses sistemas de equações algébricas que constituem o modelo da rede. Existem diferentes metodologias para a resolução de problemas de convergência de casos de fluxo de potência. Todas buscam a determinação de um ponto de operação viável para o sistema elétrico.

Ribeiro (2005) comenta que, normalmente, os algoritmos utilizados para a resolução do problema de fluxo de potência correspondem à resolução do sistema de equações por um processo iterativo. Dentre os diversos algoritmos utilizados, o mais eficiente é o Método de Newton-Raphson e seus variantes, o Método Desacoplado e o Método Desacoplado Rápido.

A resolução de equações não lineares é bastante complicada e cara do ponto de vista computacional, porém um modelo aproximado, chamado de Fluxo de Carga Linearizado ou DC, permite estimar com baixo custo computacional e precisão aceitável a distribuição de fluxo de potência ativa em uma rede de transmissão (Lescano, 2004).

Esta análise do fluxo de potência é um dos estudos mais freqüentes realizados em sistemas elétricos de potência. Como exemplo de aplicação de simulações de fluxo de potência, pode-se citar os estudos para planejamento do sistema elétrico, verificando as providências a serem tomadas com o crescimento deste sistema.

## 2.2 Fluxo de Carga Linearizado (DC)

Pode-se dizer que, quanto mais elevado o nível de tensão, melhores serão os resultados fornecidos pelo fluxo de carga DC. O modelo de fluxo de carga linearizado não leva em conta a variação das magnitudes das tensões nodais, potências reativas, e taps dos transformadores.

A diferença para o fluxo de carga convencional está em algumas considerações, que podem ser visualizadas nas equações (5), (6) e (7):

$$V_k \approx V_m \approx 1 p.u. \tag{5}$$

$$\theta_{km}\ pequeno \quad \begin{cases} \operatorname{sen}\theta_{km} \approx \theta_{km} \\ \cos\theta_{km} \approx 1 \end{cases} \tag{6}$$

$$r_{km} << x_{km} \quad \begin{cases} b_{km} \approx -1/x_{km} \\ g_{km} \approx 0 \end{cases} \tag{7}$$

Onde:

$x_{km}$ é a reatância da linha que une as barras *k* e a barra *m*.

Assim, o fluxo de potência fica aproximado por (8), (9) e (10):

$$P_{km} = -P_{mk} \tag{8}$$

$$P_{km} = x_{km}^{-1}\theta_{km} \tag{9}$$

$$P_{km} = \frac{\theta_k - \theta_m}{x_{km}} \tag{10}$$

O modelo de Fluxo de Carga Linearizado ou DC é muito usado em problemas de fluxo de potência ótimo para resolver o problema de despacho ótimo de geração, considerando custos de cada gerador, sujeito às restrições das capacidades de transmissão das linhas e limites nos mesmos geradores.

## *2.3 O problema de Despacho Econômico (DE) e o conceito de Fluxo de Potência Ótimo (FPO)*

O interesse na operação econômica dos sistemas de energia elétrica apareceu por volta de 1920 (Davison, 1922), sendo a origem do FPO associado ao modelo de despacho econômico.

O problema de despacho econômico visa alocar economicamente a carga entre as unidades térmicas com custos e características diferentes, de modo a atender a demanda global a todo instante (Lima, 1993). No início dos anos 30, Steinberg e Smith (1934) demonstraram que a solução mais econômica era operar todas as unidades geradoras ao mesmo custo marginal. Esta solução é obtida resolvendo-se o seguinte problema simplificado, através das expressões (11) e (12):

$$\min \sum_{i=1}^{ng} ct_i(p_{g_i}) \tag{11}$$

$$s.a. \sum_{i=1}^{ng} p_{g_{i)}} = p_d \qquad (\lambda) \tag{12}$$

Onde:

$ct_i(p_{g_i})$ função custo de geração da unidade térmica na barra *i*

$p_{g_i}$ geração ativa na barra *i*

$p_d$ demanda total

$ng$ número de barras de geração

$\lambda$ multiplicador de Lagrange

A função Langrangeana é dada pela fórmula (13):

$$L = \sum_{i=1}^{ng} \left[ ct_i(p_{g_i}) - \lambda \cdot p_{g_i} \right] + \lambda \cdot p_d \tag{13}$$

Assim, a solução ótima do problema será dada pela condição de estacionariedade da função Langrangeana, ou seja, pela equação (14):

$$\frac{\partial L}{\partial p_{g_i}} = \frac{\partial ct_i(p_{g_i})}{\partial p_{g_i}} - \lambda = 0 \qquad i = 1,2,...,ng \tag{14}$$

Isto resulta em (15):

$$\lambda = \frac{\partial ct_i(p_{g_i})}{\partial p_{g_i}} \qquad i = 1,2,...,ng \tag{15}$$

O multiplicador de Lagrange $(\lambda)$ representa o custo marginal do sistema, ou seja, o custo adicional para o atendimento de 1 MW a mais na demanda. Nesta formulação é considerado somente o atendimento da demanda global, não sendo representadas as restrições do sistema de transmissão e nem as perdas. Tal

abordagem simplificada é aceitável para sistemas de pequeno porte nos quais as unidades geradoras se localizam próximas aos centros de cargas.

Uma interpretação moderna do despacho econômico surgiu quando foram publicadas as condições de otimalidade de Kuhn-Tucker na programação não linear (Kuhn and Tucker, 1951). A partir deste momento, diversos trabalhos foram publicados sobre o despacho econômico.

Flores (2006) afirma que o surgimento do problema de FPO ocorreu no início da década de 60, com o uso de computadores digitais, sendo proposto por Carpentier, baseado em um problema de despacho econômico (DE).

Kirchmayer (1958) inclui a teoria e aplicações práticas envolvidas na determinação da operação econômica de sistemas de potência. São considerados métodos de cálculo de perdas em redes de transmissão, largamente aplicados por distribuidoras de energia nos Estados Unidos e no Canadá. Segundo o autor, com o desenvolvimento de sistemas de potência integrados e a interconexão de empresas que operam tais sistemas, que objetivam o intercâmbio econômico, é necessário considerar não somente o custo incremental do combustível, mas, também, as perdas incrementais na transmissão para a economia ótima.

Baptista (2004) salienta que, historicamente, o problema de DE, resolvido pelo método dos custos incrementais iguais, foi o precursor do problema de fluxo de potência ótimo, o qual marcou o fim do período clássico do despacho econômico, que tinha sido estudado e desenvolvido ao longo de 30 anos. Assim, o problema de DE passou a ser abordado como um caso particular do FPO.

A diferença básica entre o despacho econômico clássico e o modelo de FPO é a substituição da equação de balanço de carga pelas equações de fluxo de carga nas quais estão incluídas as perdas.

O método do gradiente reduzido de Dommel e Tinney (1968) possibilitou um grande avanço na resolução de FPO, pois permitiu seu uso em sistemas de grande porte graças às técnicas de esparsidade desenvolvidas por Tinney e Walker (1967). As variáveis do problema são divididas em variáveis independentes ou de controle (gerações, tensões em barras de gerações, taps, capacitores e reatores shunts, entre outras) e variáveis dependentes ou de estado (tensões em barras de carga e

ângulos de tensões). Este método trata as restrições de desigualdade funcionais que violam seus limites por penalidades e resolve as restrições de igualdade pelo Método de Newton-Raphson.

Brameller (1976) propôs fortalecer a utilização da esparsidade e explicar as técnicas numéricas e de programação computacional que podem ser usadas para resolver problemas que possuem um significante grau de esparsidade. Os métodos são aplicados a redes lineares, pois, geralmente, os problemas pertencem a este tipo de categoria. Caso seja não linear, a rede é aproximada como tal problema através de uma linearização sucessiva usando métodos iterativos. Ele comenta que métodos de esparsidade podem ser aplicados com grande vantagem para a solução desses problemas.

Ainda nos anos 70, alguns métodos de otimização baseados em modelos lineares dos sistemas elétricos de potência também foram publicados. Os modelos de programação linear são aqueles em que as variáveis são contínuas e apresentam um comportamento linear, tanto em relação às restrições como à função objetivo. Na solução do modelo de fluxo de potência ótimo através métodos de Programação Linear (PL) a função objetivo e as restrições são linearizadas em torno de um ponto de operação. O problema de programação linear resultante da aplicação das linearizações pode ser eficientemente resolvido através do Método Simplex de programação linear (Stott and Marinho, 1979).

Outra abordagem para a solução do FPO é através da programação linear sucessiva (Alsac e Stott, 1983). Esta técnica consiste de uma seqüência de cálculos de fluxo de potência (não-linear) e programação linear.

Em 1984, Burchett et al. apresentaram um método de programação quadrática seqüencial que tem como ponto de partida, as condições de otimalidade de primeira ordem (Burchett et al., 1984). Nesta metodologia, tais condições são representadas através de um problema de minimização cuja função objetivo é uma quadrática e as restrições são linearizadas. Esse problema é resolvido para se obter incrementos nas variáveis e multiplicadores de Lagrange do problema de FPO. Portanto, cada estimativa de solução do FPO é obtida após a resolução de um problema de otimização quadrática e, quando os erros nas condições de otimalidade

originais estão dentro de limites aceitáveis, chega-se à solução do problema original. O tratamento dado às restrições de desigualdade é semelhante ao empregado pelo método de Newton.

No mesmo ano, Sun et al. utilizaram uma formulação explícita do Método de Newton para minimizar a função Lagrangeana do problema de Fluxo de Potência Ótimo (Sun et al., 1984). A cada iteração, a função Lagrangeana é aproximada por uma função quadrática através da expansão em série de Taylor de segunda ordem. A solução do problema de fluxo de potência ótimo ocorre quando as condições de otimalidade de Karush-Khun-Tucker (Bazaraa, 1993) são satisfeitas, e as equações do fluxo de carga convergidas, isto é, estão dentro de uma tolerância preestabelecida.

Granville [Granville, 1994] propôs o método Primal-Dual Barreira - Logarítmica, um método de Pontos Interiores, que consiste em encontrar o ponto ótimo satisfazendo às restrições canalizadas durante o processo iterativo. Neste trabalho, as restrições de desigualdade são transformadas em restrições de igualdade através da introdução de variáveis de folga. Após esta etapa, as variáveis de folga são introduzidas na função objetivo do problema através da função barreira logarítmica e dos parâmetros de barreira que tendem a zero com o aumento do número de iterações.

É oportuno destacar, também, o trabalho de Wu et al. (Wu et al., 1994), que sugere uma extensão do método primal-dual desenvolvido por Granville (Granville, 1994). Seu algoritmo é chamado de método preditor-corretor, e sua diferença em relação ao método primal-dual está na introdução de termos não-lineares nas condições de otimalidade.

No ano de 2003, Rosehart et al. propuseram um problema de FPO baseado nas metodologias multiobjetivo para resolver o problema de despacho de potência ativa e reativa, enquanto maximiza as restrições de segurança de tensão (Rosehart et al., 2003). Este problema foi resolvido através de uma metodologia que utiliza o método de pontos interiores combinado com a técnica de programação por metas.

Mikilita (2005) observa que, diferentemente de um problema clássico de Fluxo de Potência, que necessita da especificação de algumas variáveis tais como:

magnitudes de tensão e potência ativa gerada nas barras de geração, o FPO trata estas variáveis como passíveis de ajustes. Para tanto, ele é apresentado como um problema de otimização, onde se procura maximizar ou minimizar um índice de desempenho, atendendo simultaneamente a um conjunto de restrições de igualdade e desigualdade.

Quando se fala em funcionamento de um sistema elétrico de potência, deve-se ter em mente que há certos pontos de operação que se tornam mais atraentes do que outros, dependendo de qual aspecto é analisado. Para exemplificar isto, Araújo (2005), diz que para diminuir as perdas do sistema pode-se distribuir a geração uniformemente pelos geradores do sistema; por outro lado, para minimizar o custo de geração, é vantagem que esta distribuição deixe de ser uniforme e passe a se concentrar nos geradores de menor custo. Nesse sentido, utiliza-se, de maneira bastante comum, o fluxo de potência ótimo onde, por meio de uma função objetivo, procura-se encontrar um ponto ótimo de funcionamento para satisfazer um ou mais objetivos, estando o sistema sujeito às restrições físicas, funcionais, de confiabilidade, entre outras.

Oliveira e Filho (2003), afirmam que o FPO tem aplicação em diversos problemas de análise e operação de sistemas de potência, tais como a análise de confiabilidade de geração e transmissão, análise de segurança, planejamento da expansão da geração e transmissão, e programação da geração à curto prazo. Na grande maioria dessas aplicações, a representação linearizada (DC) do fluxo de potência ótimo tem sido adotada, devido à sua maior simplicidade e ao grau de precisão satisfatório de seus resultados.

O problema de FPO, como visto anteriormente, consiste na determinação do estado de uma rede elétrica. Maximiza ou minimiza uma função objetivo enquanto satisfaz um conjunto de restrições físicas e operacionais. Caracterizado como um problema de programação não-linear com restrições, o problema de FPO pode ser formulado matematicamente e, genericamente, como mostrado em (16):

$$\begin{aligned} &\min\ f(x) \\ &s.a.\ \ g_i(x) = 0, i = 1,2,...,m \\ &\qquad h_j(x) \le 0,\ j = 1,2,...,r \\ &\qquad x^{\min} \le x \le x^{\max} \end{aligned} \tag{16}$$

Onde:

*x* representa o vetor das variáveis de estado e controle do sistema (ângulos de fase, magnitudes das tensões e tap dos transformadores);

$x^{min}$ e $x^{max}$ representam os vetores dos seus limites inferiores e superiores, respectivamente;

*f(x)* representa as perdas de potência ativa na transmissão;

*g(x)* representa o conjunto das equações de balanço do fluxo de potência;

*h(x)* representa o conjunto das restrições funcionais (limites de potência ativa e reativa nas linhas de transmissão e transformadores).

As restrições de igualdade correspondem à modelagem da rede (equações não-lineares de balanço de potência ativa e reativa em cada nó da rede), enquanto que as restrições de desigualdade representam os limites das variáveis do sistema (restrições funcionais dos equipamentos e operacionais do sistema).

Finalmente, nos últimos anos, em alguns países há grande preocupação com o modo de operação de seus sistemas elétricos, e estão em busca do desenvolvimento de ferramentas que possam alcançar o despacho econômico ótimo de suas usinas. Como exemplo disso, pode-se citar o caso da Colômbia, onde um aplicativo, chamado de Despacho e Redespacho Programado (ou DRP, das iniciais em espanhol), baseado em técnicas de programação inteira mista, tem sido desenvolvido nos últimos anos. O DRP foi implementado para solucionar o problema de despacho econômico do Mercado Elétrico Colombiano. Esse aplicativo está sendo utilizado para melhorar o processo do despacho de energia, executado pelo Operador do Sistema do Mercado Elétrico Colombiano, chamado de XM, atendendo

à demanda de energia, de acordo com as regras do Mercado Colombiano de Eletricidade (Ruiz et al., 2006).

# 3 PROPOSTA METODOLÓGICA

Como dito anteriormente, o objetivo deste trabalho é verificar qual (ou quais) geração influencia, ou melhor, impacta, de forma relevante, cada uma das barras de um determinado sistema elétrico de potência. Diante disso, será apresentado aqui o método utilizado para alcançar tal meta, através da técnica de programação linear, onde estão presentes as restrições do problema, tanto de igualdade quanto desigualdade, bem como a função objetivo.

Alguns estudos com este intuito vêm sendo desenvolvidos na literatura. Kirschen et al. (1997) mostra uma técnica que, partindo de uma solução de fluxo de potência, primeiro identifica as barras que são atingidas pela energia produzida por cada gerador. Posteriormente, esta técnica determina o conjunto de barras alimentadas pelos mesmos geradores. Usando a hipótese de proporcionalidade, é então possível calcular a contribuição de cada gerador nas cargas e fluxos. É comentado ainda que tal técnica não está limitada às mudanças incrementais.

Sulaiman et al. (2007) apresenta um método baseado na teoria da superposição que determina a quantidade de potência ativa e reativa produzidas por certo gerador e que alimenta uma determinada carga. A alocação da perda de cada linha, a qual é produzida por cada gerador, pode ser também obtida, assim como tensões e correntes presentes em um sistema elétrico.

Vale ressaltar que toda a metodologia exposta aqui parte dos resultados obtidos pelo fluxo de potência linearizado DC, ou seja, os fluxos de potência presente em um dado sistema elétrico já são conhecidos.

## *3.1 Metodologia proposta*

A origem de toda a modelagem utilizada tem início no fluxo de carga convencional (também conhecido como *load flow*). O cálculo do fluxo de potência permite obter os fluxos de potência ativa que circulam pelas linhas de transmissão de um dado sistema, além de outras grandezas. Entretanto, para o estudo proposto, utiliza-se somente o fluxo de potência ativa. Além desta variável, são consideradas as gerações e cargas existentes no sistema de interesse. Entretanto, antes de

continuar, é pertinente comentar sobre o chamado sistema de interesse, ou a região de estudo.

Caso exista um sistema de grandes proporções e seja necessário aplicar a metodologia dos fluxos energéticos, basta reduzi-lo tanto quanto for a necessidade. Para uma melhor visualização, observe a Figura 1, onde está ilustrado o sistema elétrico de potência completo.

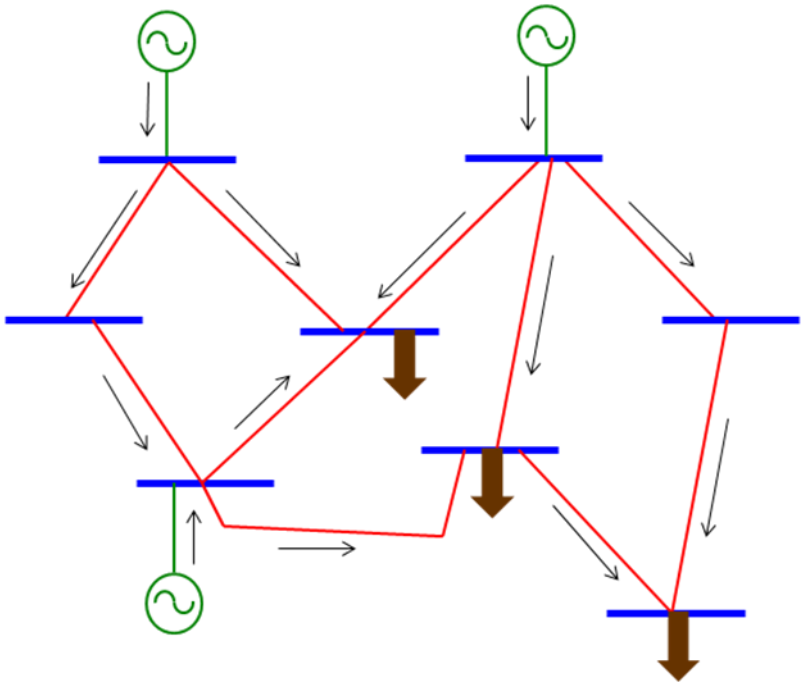

**Figura 1 – SEP completo**

Seja, agora, a região de interesse indicada na Figura 2. Percebe-se que são importantes apenas as barras e linhas localizadas dentro desta área.

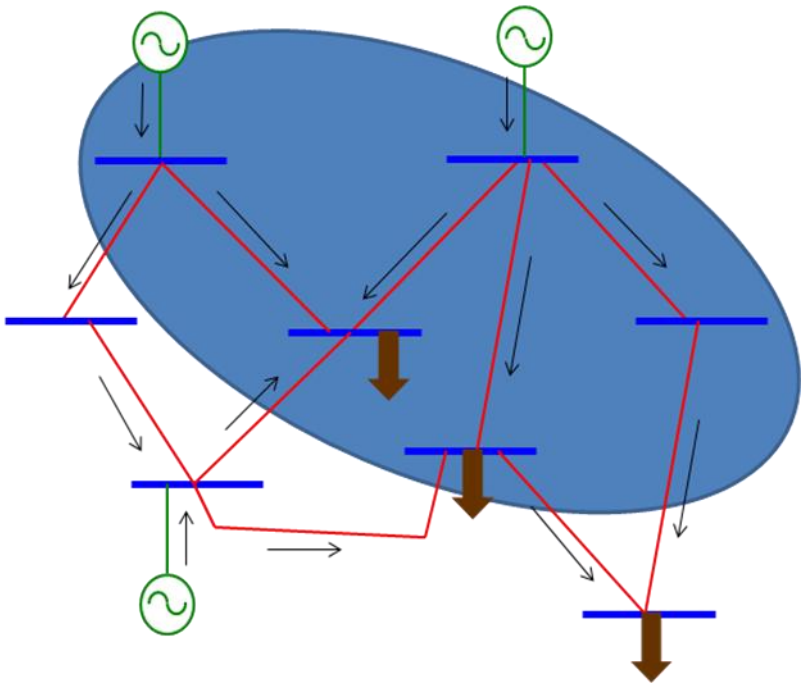

**Figura 2 – SEP com a região de interesse**

O que se faz, então, é considerar os fluxos de potência que estão fora da região de interesse e que chegam às barras localizadas dentro da região, como sendo gerações de iguais magnitudes conectadas às respectivas barras. De outro lado, os fluxos de potência que estão fora da região de interesse e que saem das barras localizadas dentro da região, são considerados como cargas de iguais magnitudes conectadas às respectivas barras. A Figura 3 mostra a nova configuração do sistema, denominado, aqui, de sistema de interesse.

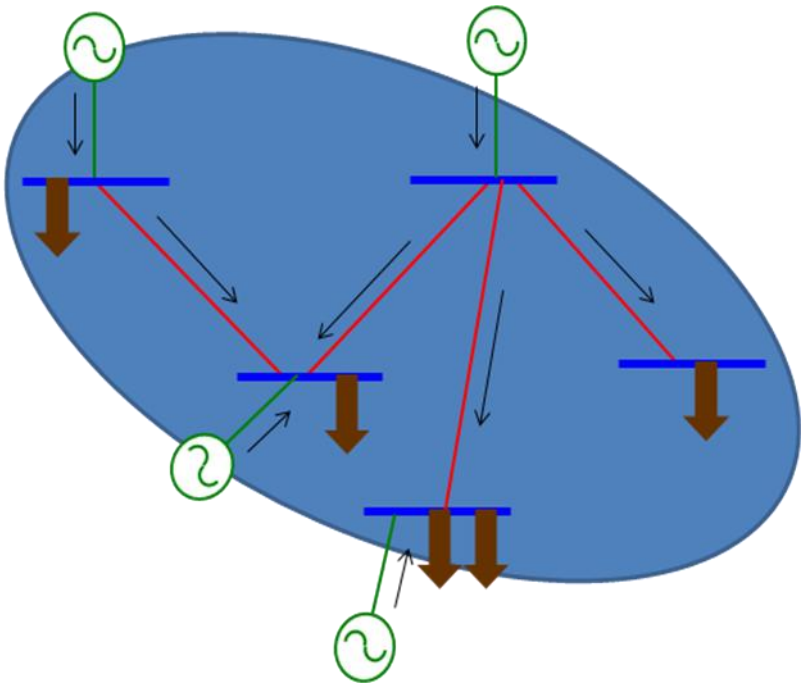

**Figura 3 – Sistema de interesse**

É importante ressaltar que se trata de um problema de otimização, onde se busca os valores mínimos de fluxos energéticos que circulam pelas linhas de transmissão. Deste modo, evita-se o *loop* de energia nas malhas (circuito fechado), conforme pode ser observado na Figura 4:

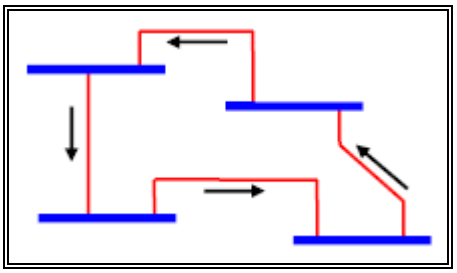

**Figura 4 – Loop de energia em uma malha**

Portanto, a função objetivo do problema é a minimização de tais fluxos, e que estão sujeitos às restrições que serão apresentadas em seguida.

Uma importante ferramenta para a resolução deste problema de minimização, que contemplas as técnicas da programação linear é o software MATLAB (MATrix LABoratory), desenvolvido pela The MathWorks. Trata-se de um programa interativo,

de alta performance, voltado para o cálculo numérico e que também pode ser usado como linguagem de programação de alto nível.

Apresentam-se, agora, os passos utilizados na modelagem, onde estão apresentadas, também, as restrições do problema:

**a) Definição das variáveis de entrada:**

a.1) Matriz P:

A matriz *P* representa os fluxos de potência ativa que circulam entre as barras. Ela é formada pelos valores obtidos diretamente da execução do *load flow*, conforme a equação (17):

$$P = \begin{bmatrix} 0 & P_{1,2} & P_{1,3} & P_{1,4} & P_{1,5} & P_{1,6} & \dots & P_{1,n} \\ P_{2,1} & 0 & P_{2,3} & P_{2,4} & P_{2,5} & P_{2,6} & \dots & P_{2,n} \\ P_{3,1} & P_{3,2} & 0 & P_{3,4} & P_{3,5} & P_{3,6} & \dots & P_{3,n} \\ P_{4,1} & P_{4,2} & P_{4,3} & 0 & P_{4,5} & P_{4,6} & \dots & P_{4,n} \\ P_{5,1} & P_{5,2} & P_{5,3} & P_{5,4} & 0 & P_{5,6} & \dots & P_{5,n} \\ P_{6,1} & P_{6,2} & P_{6,3} & P_{6,4} & P_{6,5} & 0 & \dots & P_{6,n} \\ \dots & \dots & \dots & \dots & \dots & \dots & 0 & \dots \\ P_{n,1} & P_{n,2} & P_{n,3} & P_{n,4} & P_{n,5} & P_{n,6} & \dots & 0 \end{bmatrix} \tag{17}$$

Nesta matriz, os elementos da diagonal são nulos, pois não existe um fluxo de potência de uma barra para ela mesma. A dimensão é definida pela equação (18):

$$\dim P = n_{BARRAS} \times n_{BARRAS} \tag{18}$$

Onde:

$n_{BARRAS}$ é o número de barras presentes no sistema elétrico de interesse.

Tem-se, ainda, que $P_{ij} = -P_{ji}$, ou seja, uma consideração utilizada do fluxo de carga linearizado, já comentado aqui.

Foi adotado que o sinal do fluxo de potência chegando a uma barra é positivo e saindo da mesma é negativo.

a.2) Vetor G:

O vetor *G* representa os valores das gerações conectadas nas barras do sistema, sendo representado pela expressão (19):

$$G = \begin{bmatrix} G_1 & G_2 & \cdots & G_n \end{bmatrix} \tag{19}$$

Possui a dimensão dada pela fórmula (20):

$$\dim G = 1 \times n_{BARRAS} \tag{20}$$

Caso uma barra não apresente nenhuma geração conectada a ela, o valor desta variável de entrada vale zero.

a.3) Vetor L:

O vetor *L* representa os valores das cargas conectadas às barras do sistema, sendo representado pela expressão (21):

$$L = \begin{bmatrix} L_1 & L_2 & \cdots & L_n \end{bmatrix} \tag{21}$$

Possui a dimensão dada pela fórmula (22):

$$\dim L = 1 \times n_{BARRAS} \tag{22}$$

Analogamente, se, porventura, uma barra não apresentar nenhuma carga conectada a ela, o valor desta entrada também vale zero.

**b) Definição da variável de saída**

b.1) Vetor X:

O vetor *X* representa as percentagens de geração que circula por cada linha do sistema, ou seja, a variável de saída do modelo, representado pela equação (23):

$$X = \begin{bmatrix} x_{2-1,G1} \\ x_{2-1,G2} \\ x_{2-1,...} \\ x_{2-1,Gn} \\ x_{3-1,G1} \\ \cdots \\ x_{n-(n-1),Gn} \end{bmatrix} \tag{23}$$

De acordo com a metodologia apresentada, a saída X é um vetor, sendo que esta pode ser transformada em uma matriz, caso se queira, onde as colunas são representadas pelas gerações e as linhas, pelas linhas de transmissão.

Este vetor possui a dimensão dada pela expressão (24):

$$\dim X = M = \left( \frac{n_{BARRAS}^2 - n_{BARRAS}}{2} \right) \cdot n_{GERADORES} \times 1 \tag{24}$$

Onde:

$n_{GERADORES}$ é o número de geradores presentes no sistema elétrico de interesse.

Foi utilizada a seguinte simbologia para os elementos do vetor *X*:

$$x_{i-j,Gk} \begin{cases} i \cdots \textit{número da barra de origem} \\ j \cdots \textit{número da barra de destino} \\ k \cdots \textit{número da barra onde tem geração} \end{cases} , \quad \textit{com } i > j$$

**c) Equações de linha:**

Fazendo-se o balanço dos fluxos de potência nas linhas de transmissão e adotando os fluxos de potência nas linhas de transmissão com $i > j$, onde *i* é o número da linha e *j* é o número da coluna, ou seja, a parte inferior da matriz *P*, a equação do fluxo de potência é dada por (25):

$$\left|P_{ij}\right|_{\substack{i\neq j\\ i>j}} = \sum_{g=1}^{n_{GERADORES}} (x_{i-j,Gg} \times G_g) \tag{25}$$

**d) Equações de barra:**

É fundamental que se faça, agora, o balanço de todas as gerações (cores) em uma mesma barra do sistema. Para cada um dos três tipos de barra considerados, há uma equação correspondente a ser utilizada:

d.1) <u>Para a barra de geração:</u>

É definida como sendo a barra onde há presença de geração, ou seja, uma central hidrelétrica, por exemplo. As equações de balanço para este tipo de barra são dadas por (26):

$$\begin{gathered}\sum_{\substack{n=1\\ n\neq k}}^{n_{BARRAS}} (x_{n\,CHEGANDO} \cdot G_n + x_{n\,SAINDO} \cdot G_n) = 0 \\ \sum_{n=k} (x_{n\,CHEGANDO} \cdot G_k + x_{n\,SAINDO} \cdot G_k) + G_k = 0\end{gathered} \tag{26}$$

Onde:

*k* é a barra onde há geração.

*CHEGANDO* é o fluxo chegando à barra n, onde se adotou positivo.

SAINDO é o fluxo saindo da barra n, onde se adotou negativo.

d.2) <u>Para a barra de carga:</u>

É definida como sendo a barra onde há presença de carga. A equação de balanço para este tipo de barra é dada por (27):

$$\sum_{n=1}^{n_{BARRAS}} (x_{n\,CHEGANDO} \cdot G_n + x_{n\,SAINDO} \cdot G_n) \leq L_k \tag{27}$$

Onde:

*CHEGANDO* é o fluxo chegando à barra n, onde se adotou positivo.

SAINDO é o fluxo saindo da barra n, onde se adotou negativo.

d.3) Para a barra neutra:

É definida como sendo a barra onde não há presença de carga nem de geração, sendo representada no modelo pela equação (28):

$$\sum_{n=1}^{n_{BARRAS}} (x_{n\,CHEGANDO} \cdot G_n + x_{n\,SAINDO} \cdot G_n) = 0 \qquad (28)$$

Onde:

*CHEGANDO* é o fluxo chegando à barra n, onde se adotou positivo.

SAINDO é o fluxo saindo da barra n, onde se adotou negativo.

É oportuno dizer que, quando uma mesma barra possui geração e carga, se o valor da geração for maior do que a carga em termos absolutos, esta barra será de geração, caso contrário, será de carga. O valor será igual à diferença existente entre a geração e a carga, qualquer que seja o tipo de barra.

Para melhor entendimento de todas as etapas do processo, apresenta-se a Figura 5 (fluxograma esquemático). Note que se trata de um problema típico de programação linear, com as restrições e a minimização da função objetivo.

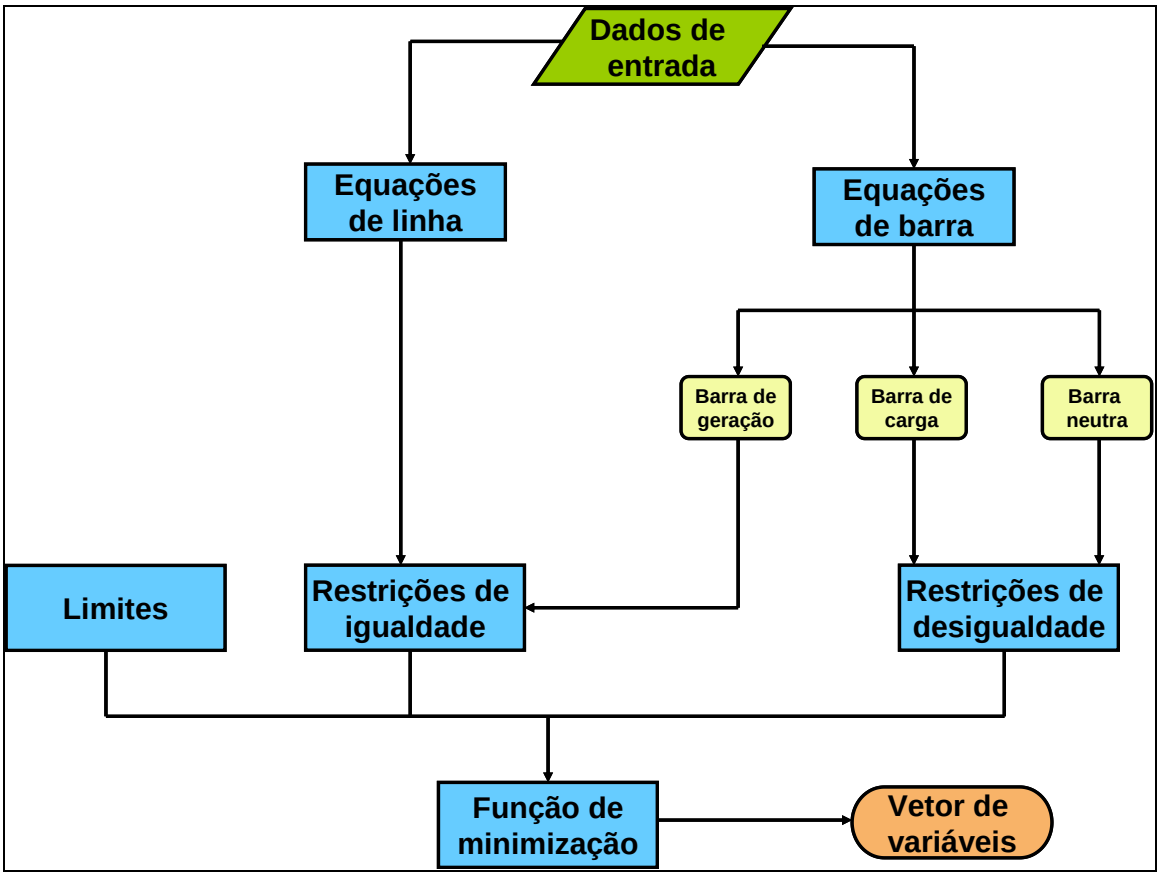


**Figura 5 – Fluxograma do modelo**

Os limites que aparecem nesta figura significam que os percentuais correspondentes a cada geração que está passando pelas linhas do sistema de interesse têm que obedecer a seguinte regra, ou seja, trata-se de mais uma restrição considerada na resolução do problema de programação linear, representada pela expressão (29):

$$0 \leq x_{i-j,Gk} \leq 1 \tag{29}$$

Diante disso, o próximo passo é a construção da matriz de impacto. Para que se possa conhecer o impacto em cada barra do sistema de interesse, é necessário calcular quanto de cada geração está chegando a cada barra. Pode-se dizer que o impacto de uma geração em uma barra qualquer é dado pela relação entre a quantidade desta geração que está chegando à barra (quantidade de MW, por

exemplo) e a quantidade total de todas as gerações que estão chegando à mesma barra (soma dos MW das gerações).

Para isto, devem ser analisados os impactos em dois tipos de barras, a saber:

- Impacto em uma barra onde não há geração;
- Impacto em uma barra onde há geração;

Considere, a priori, o impacto de todas as gerações em uma barra qualquer *z*, onde não há geração. O impacto de tais gerações nesta barra pode ser escrito como mostrado na expressão (30):

$$IG(z) = \sum_{k=1}^{n_{BARRAS}} IG(k) = 1{,}00 \tag{30}$$

Onde:

$$IG(k) = \frac{x_{i-j,Gk} \cdot G\ (k)}{\sum_{k=1}^{n_{BARRAS}} x_{i-j,Gk} \cdot G(k)} \tag{31}$$

Por outro lado, quando a barra z possui uma geração conectada, é necessário adicionar o impacto desta geração na própria barra. Assim, o impacto de todas as gerações é, agora, dado por (32):

$$IG(z) = \left[ \sum_{\substack{k=1 \\ k \neq z}}^{n_{BARRAS}} IG(k)' \right] + IG(z)' = 1{,}00 \tag{32}$$

Onde:

*IG(z)'* é o impacto da barra *z*, na própria barra, sendo calculado através da fórmula (33):

$$IG(z)' = \frac{G\ (z)}{\sum_{k=1}^{n_{BARRAS}} x_{i-j,Gk} \cdot G(k) + G(z)} \tag{33}$$

Os impactos das demais barras, nesta nova barra *z*, são dados por (34):

$$IG(k)' = \frac{x_{i-j,Gk} \cdot G\ (k)}{\sum_{\substack{k=1 \\ k \neq z}}^{n_{BARRAS}} x_{i-j,Gk} \cdot G(k) + G(z)} \tag{34}$$

O que falta, no entanto, é apenas a construção da matriz. Como este impacto será uma soma de várias parcelas, representadas pelas gerações existentes no sistema, esta matriz pode ser representada como:

| ***Geração*** / ***Barra*** | ***G(a)*** | ***G(b)*** | ***...*** | ***G(n)*** | ***TOTAL*** |
|---|---|---|---|---|---|
| ***1*** | *IG(a)* | *IG(b)* | *...* | *IG(n)* | *1,00* |
| ***2*** | *IG(a)* | *IG(b)* | *...* | *IG(n)* | *1,00* |
| ***...*** | *...* | *...* | *...* | *...* | *...* |
| $n_{BARRAS}$ | *IG(a)* | *IG(b)* | *...* | *IG(n)* | *1,00* |

Note que o somatório de cada linha (coluna TOTAL) deve ser igual a 1, ou 100%, já que os impactos são percentuais das gerações existentes. Outro ponto a ser comentado é que as colunas desta matriz são representadas apenas pelas gerações, ou seja, esta matriz não é quadrada.

O próximo passo é a aplicação desta modelagem a dois casos, sendo um sistema de menor porte, fictício, e outro realista, representado pelo sistema elétrico de 500 kV da Bacia do Paraná, obtido junto ao Operador Nacional do Sistema Elétrico - ONS.

# 4 ESTUDOS DE CASO

Neste item far-se-á a aplicação do modelo apresentado no capítulo anterior em três estudos de caso. O primeiro, de menor porte e hipotético, é representado por um sistema com as seguintes características: 8 barras, 9 linhas, 4 unidades geradoras e 3 cargas, e que serviu de base para toda a metodologia proposta.

Diante disso, pretendeu-se aplicar esta modelagem a um sistema teste, conhecido largamente em todo o mundo e bastante utilizado no âmbito acadêmico, no segundo sistema, representado pelo IEEE 14 barras. Por fim, analisou-se um caso real do sistema interligado nacional - SIN, representado, aqui, pelo sistema elétrico de 500 kV da Bacia do Paraná.

## *4.1 Fluxo Energético no Sistema Fictício*

Primeiramente, seja o sistema elétrico mostrado na Figura 6, com as gerações, cargas e fluxos de potência ativa nas linhas.

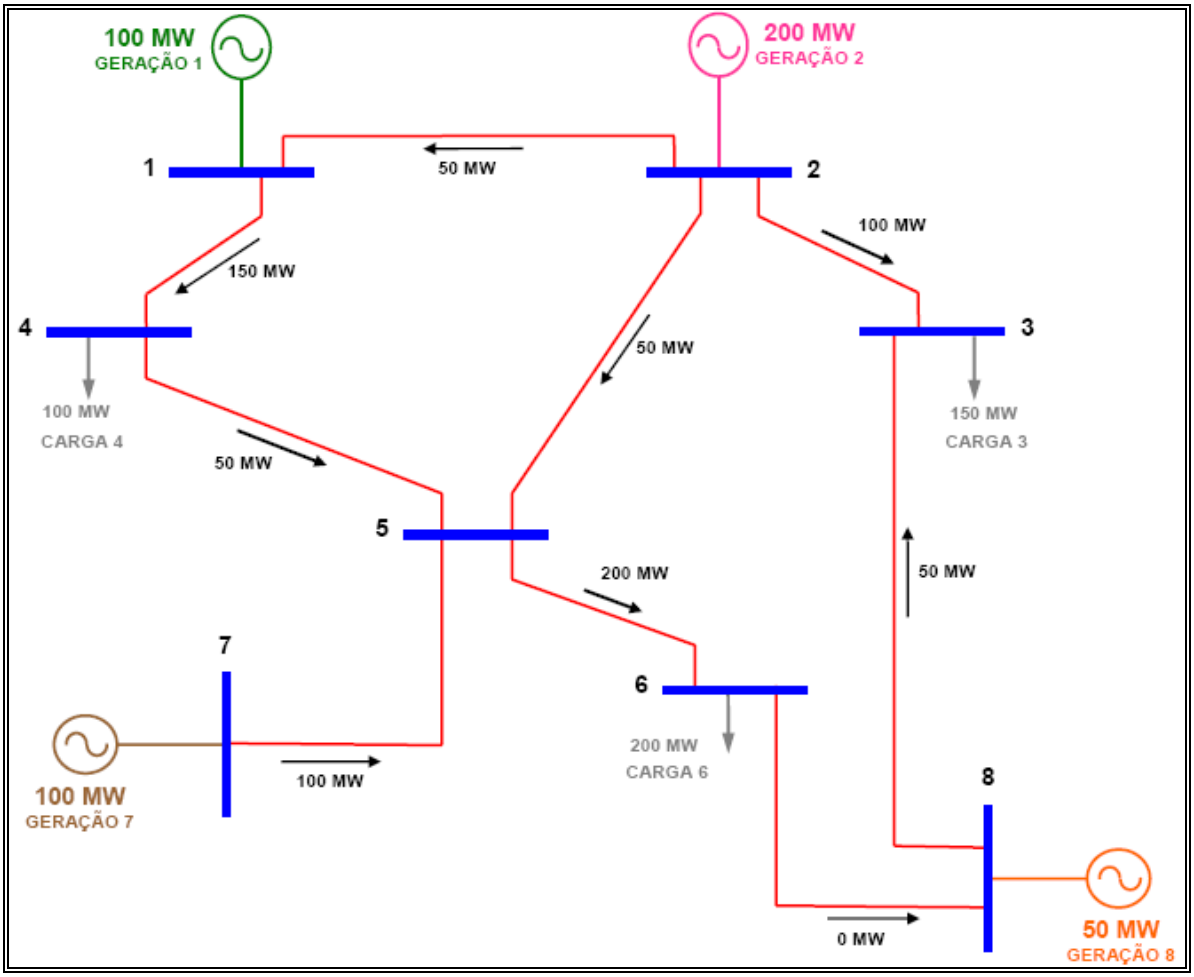


**Figura 6 - Sistema elétrico de potência fictício**

Vale salientar que, por se tratar de um modelo fictício, considerou-se que não existiria fluxo de potência da barra 6 para a barra 8, isto é, todos os fluxos representados foram distribuídos de forma aleatória, com a preocupação, apenas, de fechar os balanços, tanto nas linhas, quanto nas barras.

De acordo com a proposta metodológica apresentada neste trabalho, têm-se as seguintes matrizes (potência, geração e carga), com as respectivas dimensões, para o sistema adotado:

$$P = \begin{bmatrix} 0 & 50 & 0 & -150 & 0 & 0 & 0 & 0 \\ -50 & 0 & -100 & 0 & -50 & 0 & 0 & 0 \\ 0 & 100 & 0 & 0 & 0 & 0 & 0 & 50 \\ 150 & 0 & 0 & 0 & -50 & 0 & 0 & 0 \\ 0 & 50 & 0 & 50 & 0 & -200 & 100 & 0 \\ 0 & 0 & 0 & 0 & 200 & 0 & 0 & 0 \\ 0 & 0 & 0 & 0 & -100 & 0 & 0 & 0 \\ 0 & 0 & -50 & 0 & 0 & 0 & 0 & 0 \end{bmatrix}$$

$$\dim P = 8 \times 8$$

$$G = \begin{bmatrix} 100 & 200 & 0 & 0 & 0 & 0 & 100 & 50 \end{bmatrix}$$

$$\dim G = 1 \times 8$$

$$L = \begin{bmatrix} 0 & 0 & 150 & 100 & 0 & 200 & 0 & 0 \end{bmatrix}$$

$$\dim L = 1 \times 8$$

Dentre as restrições apresentadas no capítulo anterior, é apresentado, abaixo, a equação para o caso da linha de transmissão de 1 para 2:

$$P_{2,1} = x_{2-1,G1} \times G_1 + x_{2-1,G2} \times G_2 + x_{2-1,G3} \times G_3 + ... + x_{2-1,G8} \times G_8$$

Mas, como no sistema dado existe geração apenas nas barras 1, 2, 7 e 8, resulta:

$$P_{2,1} = x_{2-1,G1} \times G_1 + x_{2-1,G2} \times G_2 + x_{2-1,G7} \times G_7 + x_{2-1,G8} \times G_8$$

Analogamente, para as demais linhas do sistema considerado, tem-se:

$$P_{1,4} = x_{1-4,G1} \times G_1 + x_{1-4,G2} \times G_2 + x_{1-4,G7} \times G_7 + x_{1-4,G8} \times G_8$$

$$P_{2,3} = x_{2-3,G1} \times G_1 + x_{2-3,G2} \times G_2 + x_{2-3,G7} \times G_7 + x_{2-3,G8} \times G_8$$

$$P_{2,5} = x_{2-5,G1} \times G_1 + x_{2-5,G2} \times G_2 + x_{2-5,G7} \times G_7 + x_{2-5,G8} \times G_8$$

$$P_{4,5} = x_{4-5,G1} \times G_1 + x_{4-5,G2} \times G_2 + x_{4-5,G7} \times G_7 + x_{4-5,G8} \times G_8$$

$$P_{5,6} = x_{5-6,G1} \times G_1 + x_{5-6,G2} \times G_2 + x_{5-6,G7} \times G_7 + x_{5-6,G8} \times G_8$$

$$P_{7,5} = x_{7-5,G1} \times G_1 + x_{7-5,G2} \times G_2 + x_{7-5,G7} \times G_7 + x_{7-5,G8} \times G_8$$

$$P_{8,3} = x_{8-3,G1} \times G_1 + x_{8-3,G2} \times G_2 + x_{8-3,G7} \times G_7 + x_{8-3,G8} \times G_8$$

$$P_{6,8} = x_{6-8,G1} \times G_1 + x_{6-8,G2} \times G_2 + x_{6-8,G7} \times G_7 + x_{6-8,G8} \times G_8$$

Estas equações também podem ser representadas na forma matricial:

$$\begin{bmatrix} P_{2,1} \\ P_{2,3} \\ P_{8,3} \\ P_{1,4} \\ P_{2,5} \\ P_{4,5} \\ P_{7,5} \\ P_{5,6} \\ P_{6,8} \end{bmatrix} = \begin{bmatrix} x_{2-1,G1} & x_{2-1,G2} & x_{2-1,G7} & x_{2-1,G8} \\ x_{2-3,G1} & x_{2-3,G2} & x_{2-3,G7} & x_{2-3,G8} \\ x_{8-3,G1} & x_{8-3,G2} & x_{8-3,G7} & x_{8-3,G8} \\ x_{1-4,G1} & x_{1-4,G2} & x_{1-4,G7} & x_{1-4,G8} \\ x_{2-5,G1} & x_{2-5,G2} & x_{2-5,G7} & x_{2-5,G8} \\ x_{4-5,G1} & x_{4-5,G2} & x_{4-5,G7} & x_{4-5,G8} \\ x_{7-5,G1} & x_{7-5,G2} & x_{7-5,G7} & x_{7-5,G8} \\ x_{5-6,G1} & x_{5-6,G2} & x_{5-6,G7} & x_{5-6,G8} \\ x_{6-8,G1} & x_{6-8,G2} & x_{6-8,G7} & x_{6-8,G8} \end{bmatrix} \times \begin{bmatrix} G_1 \\ G_2 \\ G_7 \\ G_8 \end{bmatrix}$$

Vale salientar que estão representados acima somente os fluxos diferentes de zero, os quais totalizam 9, pois este é o número de linhas de transmissão existentes.

Considerando-se todas as possibilidades possíveis, obtém-se um total de equações de linha de:

$$NEQLIN = \frac{n_{BARRAS}^2 - n_{BARRAS}}{2} = \frac{8^2 - 8}{2} = 28$$

Considerando, agora, as restrições de desigualdade, apresenta-se as equações de barra. A princípio, mostra-se o balanço para a barra 1, que corresponde ao caso de uma barra de geração:

$$Barra\ 1 \Rightarrow \begin{cases} x_{2-1,G1} \cdot G_1 - x_{4-1,G1} \cdot G_1 + G_1 = 0 \\ x_{2-1,G2} \cdot G_2 - x_{4-1,G2} \cdot G_2 = 0 \\ \vdots \\ x_{2-1,G8} \cdot G_8 - x_{4-1,G8} \cdot G_8 = 0 \end{cases}$$

Sabe-se que quando não há ligação entre duas barras não há fluxo de potência, portanto, as parcelas referentes às linhas não existentes serão iguais a zero.

Levando em consideração que a barra 3 é uma barra de carga, tem-se o seguinte balanço para tal barra:

$$Barra\ 3 \Rightarrow \begin{cases} x_{3-2,G1} \cdot G_1 + x_{8-3,G1} \cdot G_1 \leq L_3 \\ x_{3-2,G2} \cdot G_2 + x_{8-3,G2} \cdot G_2 \leq L_3 \\ \vdots \\ x_{3-2,G8} \cdot G_8 - x_{8-3,G8} \cdot G_8 \leq L_3 \end{cases}$$

Para a barra do tipo neutra, como é o caso da barra 5, tem-se o balanço:

$$\begin{aligned} &(x_{5-2,G1} \times G_1 + x_{5-4,G1} \times G_1 + x_{7-5,G1} \times G_1 - x_{6-5,G1} \times G_1) = 0 \\ &(x_{5-2,G2} \times G_2 + x_{5-4,G2} \times G_2 + x_{7-5,G2} \times G_2 - x_{6-5,G2} \times G_2) = 0 \\ &(x_{5-2,G7} \times G_7 + x_{5-4,G7} \times G_7 + x_{7-5,G7} \times G_7 - x_{6-5,G7} \times G_7) = 0 \\ &(x_{5-2,G8} \times G_8 + x_{5-4,G8} \times G_8 + x_{7-5,G8} \times G_8 - x_{6-5,G8} \times G_8) = 0 \end{aligned}$$

Resumindo, para este sistema elétrico de potência, têm-se as características mostradas na Tabela 1:

**Tabela 1 – Características do sistema fictício**

| Item | Quantidade |
|---|---|
| Restrições de desigualdade | 16 |
| Restrições de igualdade | 40 |
| Variáveis (vetor X) | 112 |

Deste total de variáveis, apenas interessam aqui 36 delas, pois há 4 gerações circulando pelas 9 linhas de transmissão. Assim, a Tabela 2 apresenta as percentagens de cada geração em cada fluxo de potência, obtidas do vetor X (solução). Note que as cores são as mesmas representadas na Figura 6, ou seja, o fluxo energético que passa em uma determinada linha de transmissão é "carimbado" pelas gerações. O valor final da função objetivo, dado pela somatória dos fluxos energéticos resultou em 6.

**Tabela 2 – Percentagens das gerações em cada LT**

| Fluxos nas LTs | Geração 1 | Geração 2 | Geração 7 | Geração 8 |
|---|---|---|---|---|
| **P(2,1)** | 0,00 | 0,25 | 0,00 | 0,00 |
| **P(2,3)** | 0,00 | 0,50 | 0,00 | 0,00 |
| **P(8,3)** | 0,00 | 0,00 | 0,00 | 1,00 |
| **P(1,4)** | 1,00 | 0,25 | 0,00 | 0,00 |
| **P(2,5)** | 0,00 | 0,25 | 0,00 | 0,00 |
| **P(4,5)** | 0,00 | 0,25 | 0,00 | 0,00 |
| **P(7,5)** | 0,00 | 0,00 | 1,00 | 0,00 |
| **P(5,6)** | 0,00 | 0,50 | 1,00 | 0,00 |
| **P(6,8)** | 0,00 | 0,00 | 0,00 | 0,00 |

As cores das letras de cada coluna da Tabela 2 são devidas as respectivas cores das gerações na Figura 1. A Figura 4 apresenta uma melhor visualização destes resultados:

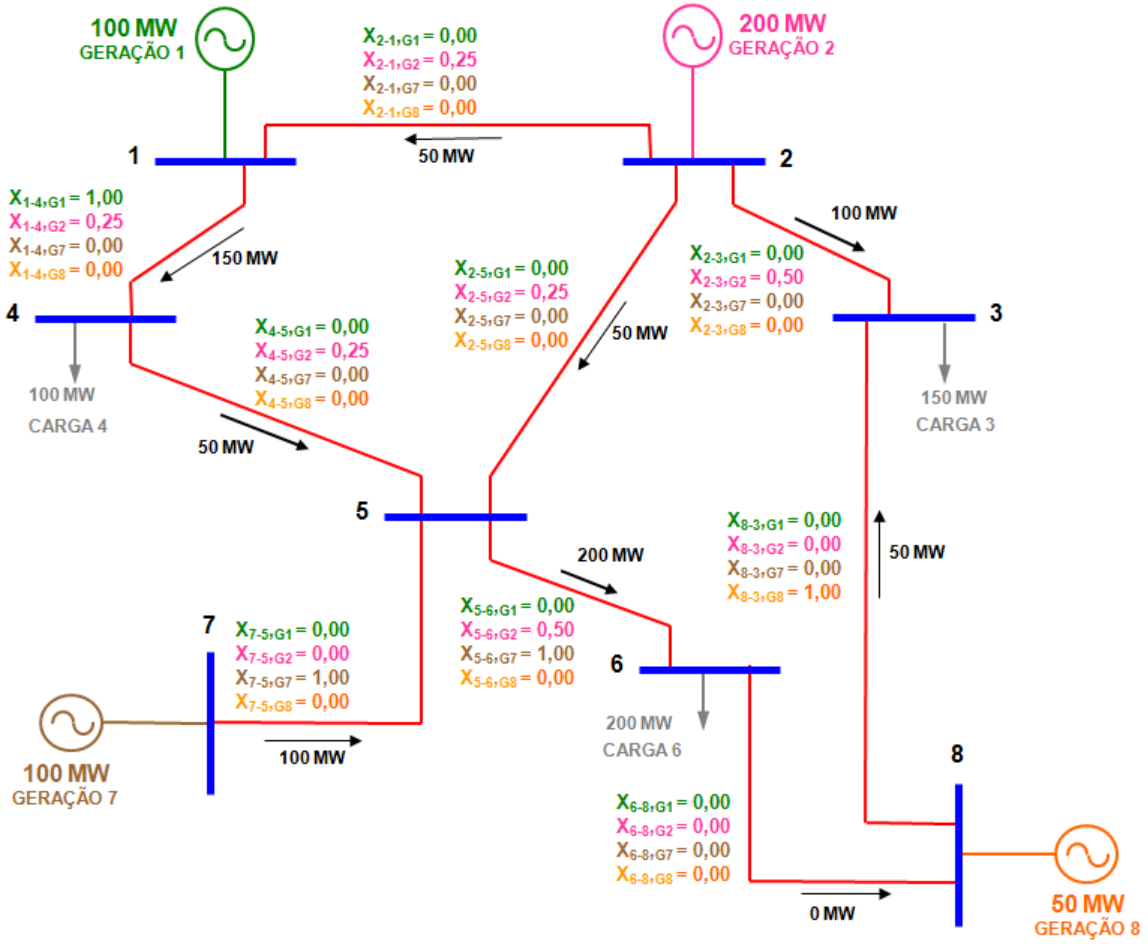


**Figura 7 – Sistema Elétrico de Potência com a solução**

Visando mostrar, de maneira simples e visual, a influência das diversas gerações (ou grupos de geração) na barra 1, por exemplo, vê-se que está chegando 100 MW da geração 1 e 25 % da geração 2 (50 MW), o que resulta em 150 MW. Calculando a contribuição de cada geração, tem-se um impacto na barra 1 de:

$$G_1 \rightarrow \frac{100}{150} = 0,67$$

$$G_2 \rightarrow \frac{50}{150} = 0,33$$

De modo análogo, adotando este mesmo procedimento para as demais barras, obtém-se, assim, a matriz de impacto que está apresentada na Tabela 3.

**Tabela 3 – Matriz de Impacto (Gerações chegando às barras em %)**

| Barra | Geração 1 | Geração 2 | Geração 7 | Geração 8 |
|---|---|---|---|---|
| 1 | 0,67 | 0,33 | 0,00 | 0,00 |
| 2 | 0,00 | 1,00 | 0,00 | 0,00 |
| 3 | 0,00 | 0,67 | 0,00 | 0,33 |
| 4 | 0,67 | 0,33 | 0,00 | 0,00 |
| 5 | 0,00 | 0,50 | 0,50 | 0,00 |
| 6 | 0,00 | 0,50 | 0,50 | 0,00 |
| 7 | 0,00 | 0,00 | 1,00 | 0,00 |
| 8 | 0,00 | 0,00 | 0,00 | 1,00 |

Analisando a Tabela 3, o impacto da geração 1 nas barras 1 e 4 é grande, e, concomitantemente, inexistente nas demais barras. Já a geração 2 apresenta impactos em quase todas as barras do sistema elétrico, excetuando-se as barras 7 e 8. Além disso, as barras 2, 7 e 8 são impactadas somente por suas respectivas gerações, ao contrário da barra 1. Isto é explicado pela topologia do sistema elétrico de potência. Finalmente, as barras 5 e 6 são impactadas igualmente pelas gerações 2 e 7.

## *4.2 Fluxo Energético no Sistema Teste IEEE 14 Barras*

### 4.2.1 Descrição do sistema em estudo

O sistema teste utilizado foi o caso base do sistema IEEE 14 barras, cuja topologia encontra-se na Figura 8.

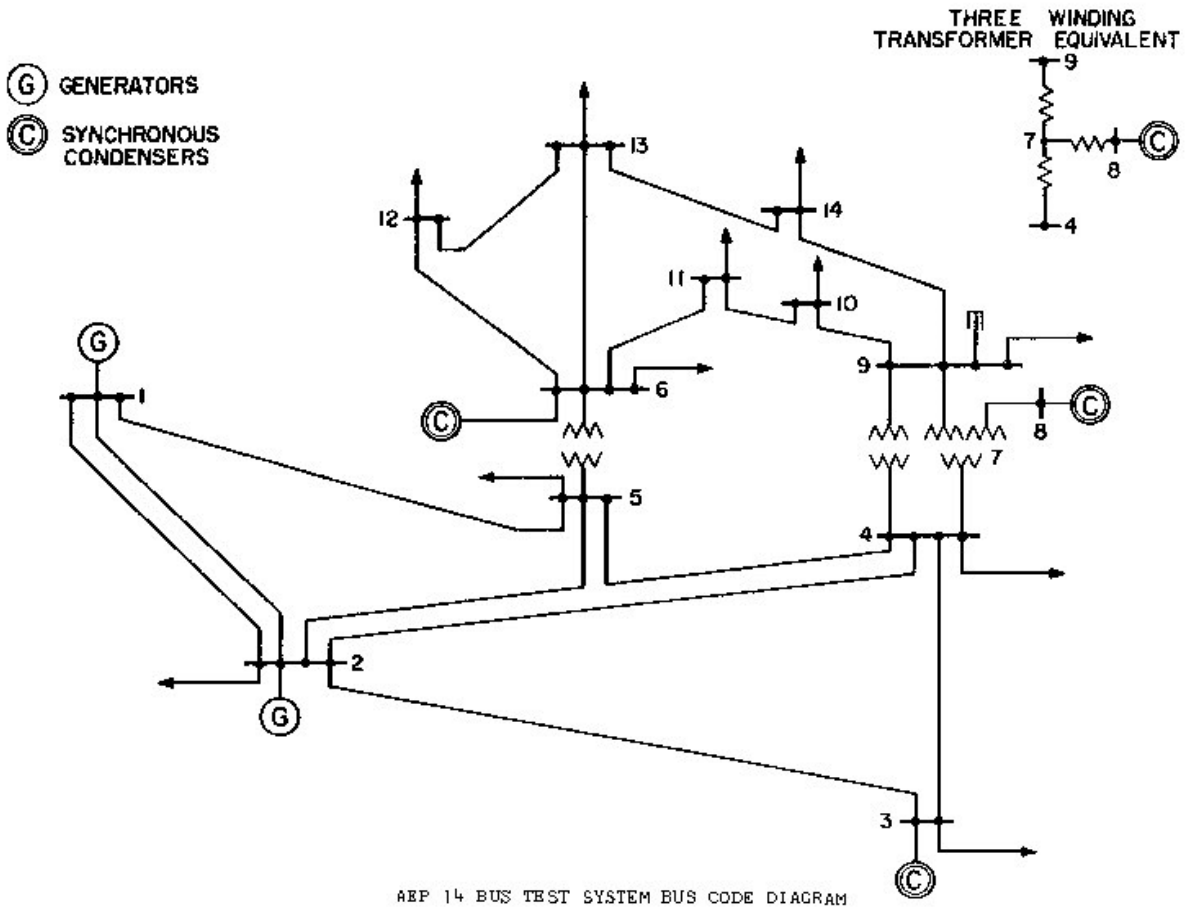


**Figura 8 – Sistema IEEE 14 barras**

Na modelagem proposta, compensadores síncronos, transformadores, reatores ou capacitores não são de interesse, mas sim o fluxo de potência ativa que circula pelos ramos, bem como geradores e cargas. Assim, este mesmo sistema pode ser simplificado, e é apresentado na Figura 9.

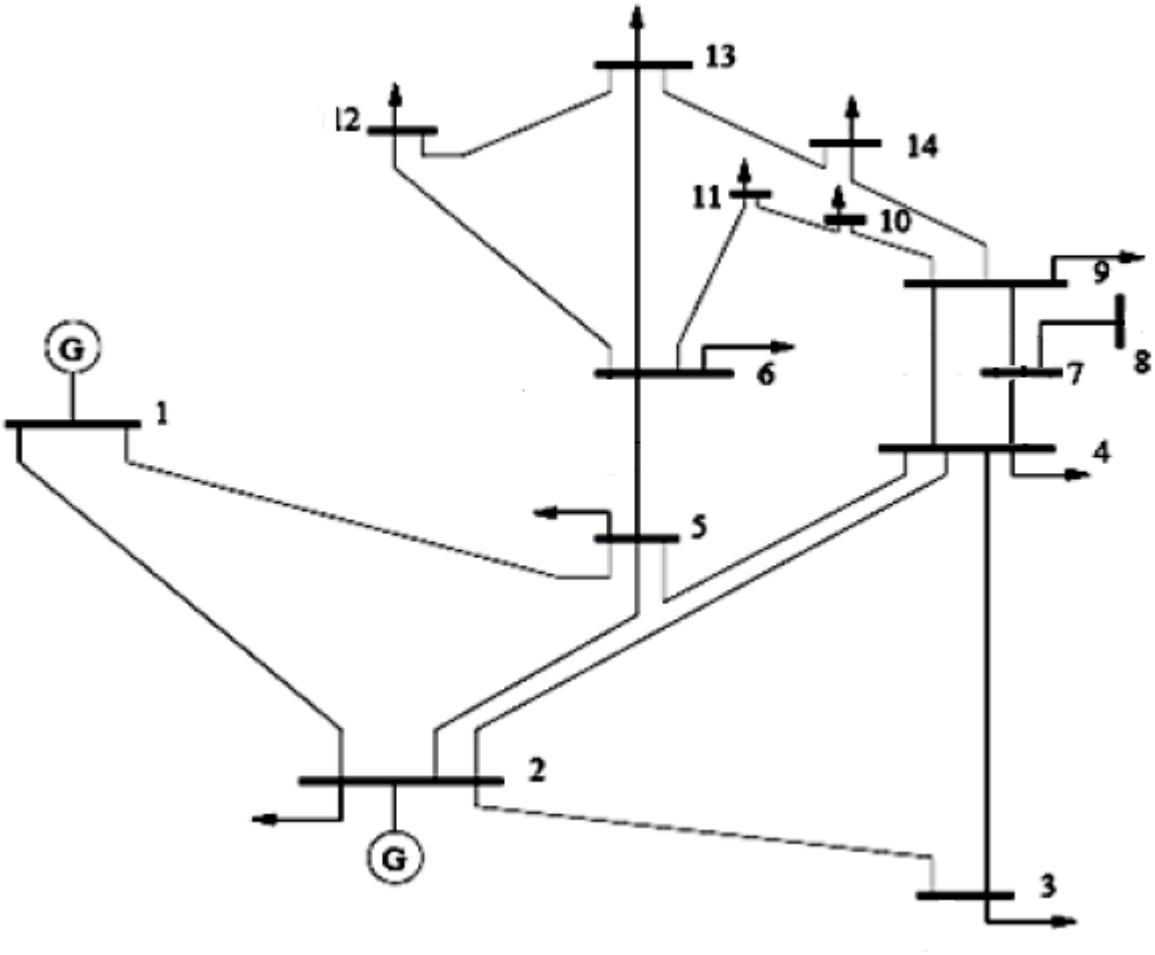


**Figura 9 – Sistema IEEE 14 barras simplificado**

### 4.2.2 Simulação e resultados

A seguir, seguem os dados de entrada, a matriz P (fluxo de potências) e os vetores G (geração) e L (carga). Como a barra 2 apresenta gerador e carga conectadas a ela, e o valor da geração é maior que a da carga, esta barra será uma barra de geração com o valor da diferença (16,1 MW).

## Vetor G

| 1 | 2 | 3 | 4 | 5 | 6 | 7 | 8 | 9 | 10 | 11 | 12 | 13 | 14 |
|---|---|---|---|---|---|---|---|---|---|---|---|---|---|
| 232,1 | 16,1 | 0 | 0 | 0 | 0 | 0 | 0 | 0 | 0 | 0 | 0 | 0 | 0 |

## Vetor L

| 1 | 2 | 3 | 4 | 5 | 6 | 7 | 8 | 9 | 10 | 11 | 12 | 13 | 14 |
|---|---|---|---|---|---|---|---|---|---|---|---|---|---|
| 0 | 0 | 97 | 50 | 9,8 | 13,2 | 0 | 0 | 30 | 9,2 | 3,5 | 6,4 | 13,7 | 15,4 |

## Matriz P

| PARA \ DE | 1 | 2 | 3 | 4 | 5 | 6 | 7 | 8 | 9 | 10 | 11 | 12 | 13 | 14 |
|---|---|---|---|---|---|---|---|---|---|---|---|---|---|---|
| 1 | 0 | -156,7 | 0 | 0 | -75,4 | 0 | 0 | 0 | 0 | 0 | 0 | 0 | 0 | 0 |
| 2 | 156,7 | 0 | -74 | -56,5 | -42,3 | 0 | 0 | 0 | 0 | 0 | 0 | 0 | 0 | 0 |
| 3 | 0 | 74 | 0 | 23 | 0 | 0 | 0 | 0 | 0 | 0 | 0 | 0 | 0 | 0 |
| 4 | 0 | 56,5 | -23 | 0 | 61,6 | 0 | -28,5 | 0 | -16,6 | 0 | 0 | 0 | 0 | 0 |
| 5 | 75,4 | 42,3 | 0 | -61,6 | 0 | -46,3 | 0 | 0 | 0 | 0 | 0 | 0 | 0 | 0 |
| 6 | 0 | 0 | 0 | 0 | 46,3 | 0 | 0 | 0 | 0 | 0 | -7,3 | -8,1 | -17,7 | 0 |
| 7 | 0 | 0 | 0 | 28,5 | 0 | 0 | 0 | 0 | -28,5 | 0 | 0 | 0 | 0 | 0 |
| 8 | 0 | 0 | 0 | 0 | 0 | 0 | 0 | 0 | 0 | 0 | 0 | 0 | 0 | 0 |
| 9 | 0 | 0 | 0 | 16,6 | 0 | 0 | 28,5 | 0 | 0 | -5,4 | 0 | 0 | 0 | -9,7 |
| 10 | 0 | 0 | 0 | 0 | 0 | 0 | 0 | 0 | 5,4 | 0 | 3,8 | 0 | 0 | 0 |
| 11 | 0 | 0 | 0 | 0 | 0 | 7,3 | 0 | 0 | 0 | -3,8 | 0 | 0 | 0 | 0 |
| 12 | 0 | 0 | 0 | 0 | 0 | 8,1 | 0 | 0 | 0 | 0 | 0 | 0 | -1,7 | 0 |
| 13 | 0 | 0 | 0 | 0 | 0 | 17,7 | 0 | 0 | 0 | 0 | 0 | 1,7 | 0 | -5,7 |
| 14 | 0 | 0 | 0 | 0 | 0 | 0 | 0 | 0 | 9,7 | 0 | 0 | 0 | 5,7 | 0 |

Como resultado apresenta-se, primeiramente, a Tabela 4 onde estão representadas todas as contribuições das gerações em cada linha de transmissão.

Em seguida, segue a Tabela 5 que apresenta quanto de cada geração está chegando a cada uma das barras do sistema, em MW.

**Tabela 4 - Contribuições das gerações em cada LT**

| LT | BARRAS COM GERAÇÃO | |
|---|---|---|
| | 1 | 2 |
| 2-1 | 0,6751 | 0,0000 |
| 3-2 | 0,3188 | 0,0000 |
| 4-2 | 0,2016 | 0,6025 |
| 4-3 | 0,0991 | 0,0000 |
| 5-1 | 0,3249 | 0,0000 |
| 5-2 | 0,1547 | 0,3975 |
| 5-4 | 0,2654 | 0,0000 |
| 6-5 | 0,1719 | 0,3975 |
| 7-4 | 0,1228 | 0,0000 |
| 8-7 | 0,0000 | 0,0000 |
| 9-4 | 0,0297 | 0,6025 |
| 9-7 | 0,1228 | 0,0000 |
| 10-9 | 0,0233 | 0,0000 |
| 11-6 | 0,0315 | 0,0000 |
| 11-10 | 0,0164 | 0,0000 |
| 12-6 | 0,0349 | 0,0000 |
| 13-6 | 0,0487 | 0,3975 |
| 13-12 | 0,0073 | 0,0000 |
| 14-9 | 0,0000 | 0,6025 |
| 14-13 | 0,0246 | 0,0000 |

**Tabela 5 - Gerações chegando às barras, em MW**

| Barras | Gerações | | Soma |
|---|---|---|---|
| Número | 1 | 2 | |
| 1 | 232,1 | | 232,1 |
| 2 | 156,7 | 16,1 | 172,8 |
| 3 | 97,0 | | 97,0 |

| Barras | Gerações | | Soma |
|---|---|---|---|
| Número | 1 | 2 | |
| 4 | 108,4 | 9,7 | 118,1 |
| 5 | 111,3 | 6,4 | 117,7 |
| 6 | 39,9 | 6,4 | 46,3 |
| 7 | 28,5 | | 28,5 |
| 8 | 0,0 | | 0,0 |
| 9 | 35,4 | 9,7 | 45,1 |
| 10 | 9,2 | | 9,2 |
| 11 | 7,3 | | 7,3 |
| 12 | 8,1 | | 8,1 |
| 13 | 13,0 | 6,4 | 19,4 |
| 14 | 5,7 | 9,7 | 15,4 |

A Tabela 6 apresenta a Matriz de Impacto, que visa mostrar, de maneira simples e visual, a influência nas diversas gerações (ou grupos de geração) nas distintas barras.

**Tabela 6 – Matriz de Impacto (Gerações chegando nas barras em %)**

| Barras | Gerações | |
|---|---|---|
| Número | 1 | 2 |
| 1 | 1,00 | 0,00 |
| 2 | 0,91 | 0,09 |
| 3 | 1,00 | 0,00 |
| 4 | 0,92 | 0,08 |
| 5 | 0,95 | 0,05 |
| 6 | 0,86 | 0,14 |
| 7 | 1,00 | 0,00 |
| 8 | 0,00 | 0,00 |
| 9 | 0,78 | 0,22 |
| 10 | 1,00 | 0,00 |
| 11 | 1,00 | 0,00 |
| 12 | 1,00 | 0,00 |
| 13 | 0,67 | 0,33 |
| 14 | 0,37 | 0,63 |

Pode-se observar a grande influência da geração 1, principalmente nas barras 3, 7, 10, 11 e 12, além de seu peso na própria barra. Em todas as barras, o impacto desta geração é predominante, exceto na barra 14. Isto pode ser explicado pela elevada potência do gerador 1 em relação ao gerador 2, bem como pela presença de uma pequena quantidade de geradores no sistema IEEE 14 barras.

## *4.3 Fluxo Energético no Sistema de 500 kV da Bacia do Paraná*

### 4.3.1 Descrição do sistema em estudo

Visando uma aplicação real da metodologia desenvolvida no "modelo de fluxo de carga energética" apresentada neste trabalho, efetuou-se um estudo para o sistema de geração e transmissão de 500 kV da Bacia do Paraná.

De acordo com o Plano Decenal de Expansão de Energia Elétrica – PDEE – 2008-2017, elaborado pela Empresa de Pesquisa Energética – EPE, a área ocupada pelos reservatórios das usinas em operação representa cerca de 0,4% do território nacional, sendo que 45% dessas áreas estão localizadas na bacia do Paraná. Esta bacia se destaca, tanto em termos de potência instalada, quanto em número de usinas localizadas nos seus rios. A Tabela 7 mostra a quantidade de usinas hidrelétricas (UHE) existentes e planejadas, por bacia hidrográfica.

**Tabela 7 - Distribuição das UHEs nas bacias hidrográficas**

| Bacia Hidrográfica | Existente | |
|---|---|---|
| | UHE em Operação | Potência instalada (MW) |
| Amazônica | 6 | 709,00 |
| Atlântico Norte | 0 | 0 |
| Tocantins - Araguaia | 7 | 11.489,00 |
| São Francisco | 11 | 10.487,00 |
| Atlântico Leste | 6 | 1.266,00 |
| Uruguai | 6 | 4.500,00 |
| Atlântico Sul-Sudeste | 50 | 5.236,00 |
| Paraná | 72 | 40.745,00 |
| **Total** | **158** | **74.432,00** |

Fonte: EPE, 2008

Pode-se notar que, na Bacia do Paraná, encontram-se em operação 72 usinas, o que representa cerca de 45% das usinas do país. Em relação à capacidade instalada, a bacia possui um total de 40.745 MW, que correspondem a 54% da potência instalada total brasileira, considerando somente usinas hidrelétricas.

O diagrama esquemático das usinas hidrelétricas do sistema interligado nacional, elaborado pelo ONS, pode ser observado através da Figura 10.

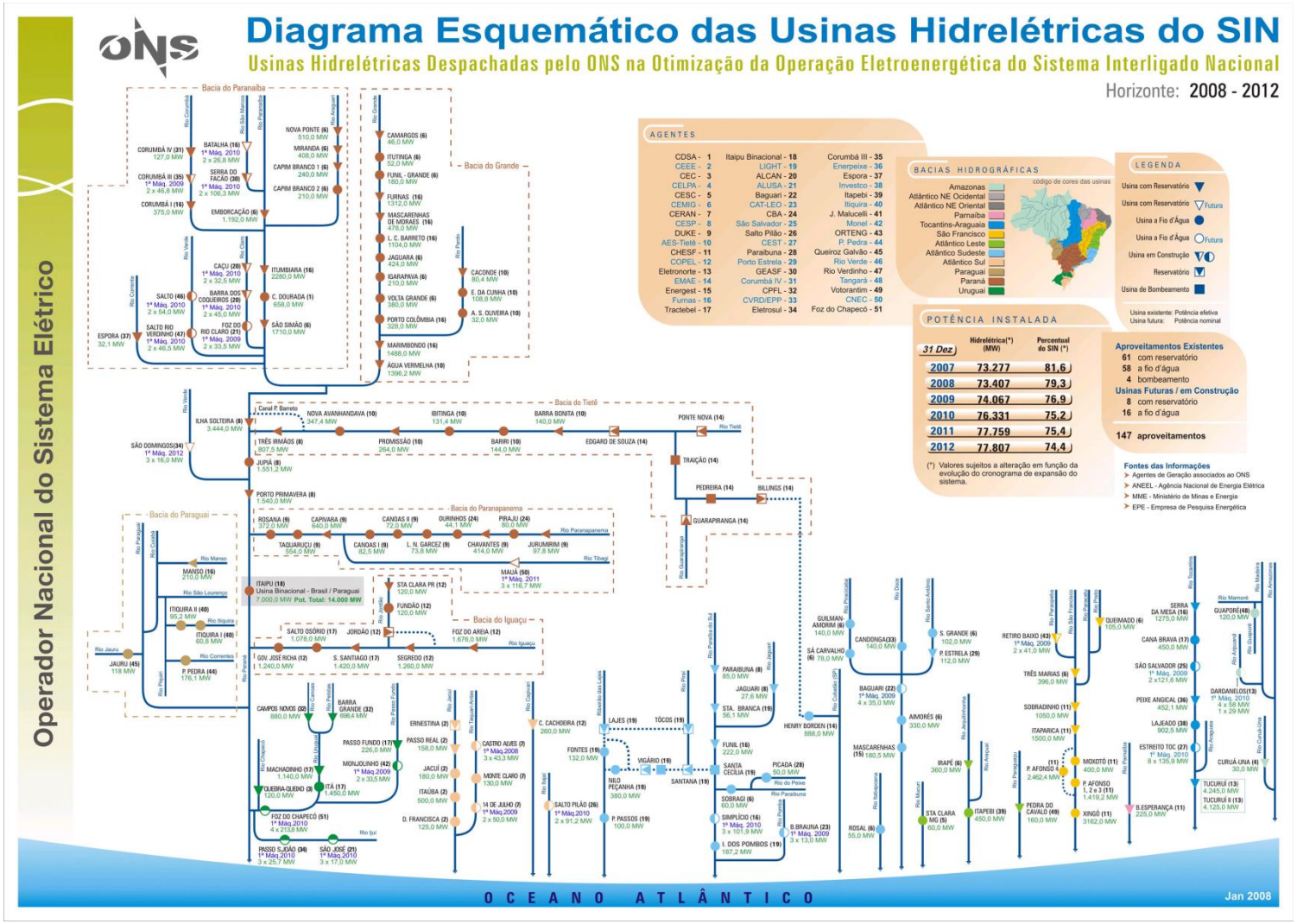


**Figura 10 - Fluxograma da geração do SIN**
**Fonte: ONS, 2008**

A importância da bacia do Paraná dentro do contexto nacional é notável, uma vez que é responsável pelo abastecimento das regiões de maior população, consumo e produção industrial do país. Quase um terço da população brasileira reside nesta Bacia, destacando-se como principais aglomerados urbanos as regiões metropolitanas de São Paulo, Campinas e de Curitiba.

### 4.3.2 Dimensão do problema

Para efeito de simplificação do sistema a ser trabalhado, foram adotados somente as barras de 500 kV, e as demais tensões foram considerados como carga (saindo) ou geração (entrando) na respectiva barra de 500 kV. As barras que se encontravam fora do limite territorial da bacia, porém ligadas a quaisquer barras pertencentes à bacia, também foram adotados como carga ou geração de acordo com o sentido do fluxo de potência.

Diante disso, o sistema da Bacia do Paraná utilizado na simulação é composto por 29 ligações (linhas de transmissão) e 24 barras, sendo 12 de geração e 12 de carga. A Tabela 8 apresenta tais barras, e a Tabela 9 mostra as linhas de transmissão presentes no sistema de 500 kV, inclusive o sentido do fluxo de carga.

**Tabela 8 – Barras do sistema de 500 kV**

| Número | Nome | Tipo de barra |
|---|---|---|
| 1 | Salto Segredo | Geração |
| 2 | Salto Santiago | Geração |
| 3 | Areia | Carga |
| 4 | Ivaiporã | Carga |
| 5 | Cascavel Oeste | Carga |
| 6 | Gov. Bento Munhoz | Geração |
| 7 | Salto Caxias | Geração |
| 8 | Londrina | Carga |
| 9 | Poços de Caldas | Carga |
| 10 | Assis | Geração |
| 11 | Araraquara | Carga |
| 12 | Marimbondo | Geração |

| Número | Nome | Tipo de barra |
|---|---|---|
| 13 | Água Vermelha | Geração |
| 14 | Campinas | Carga |
| 15 | Itajubá | Carga |
| 16 | Itumbiara | Geração |
| 17 | Samambaia | Carga |
| 18 | Emborcação | Carga |
| 19 | Ibiúna | Geração |
| 20 | Cachoeira Paulista | Carga |
| 21 | Tijuco Preto | Geração |
| 22 | Nova Ponte | Geração |
| 23 | São Simão | Geração |
| 24 | Jaguará | Carga |

**Tabela 9 - Linhas de Transmissão**

| Barra de Origem | | Barra de Destino | |
|---|---|---|---|
| Número | Nome | Número | Nome |
| 2 | Salto Santiago | 1 | Salto Segredo |
| 3 | Areia | 1 | Salto Segredo |
| 4 | Ivaiporã | 2 | Salto Santiago |
| 7 | Salto Caxias | 2 | Salto Santiago |
| 4 | Ivaiporã | 3 | Areia |
| 6 | Gov. Bento Munhoz | 3 | Areia |
| 5 | Cascavel Oeste | 4 | Ivaiporã |
| 8 | Londrina | 4 | Ivaiporã |
| 7 | Salto Caxias | 5 | Cascavel Oeste |
| 10 | Assis | 8 | Londrina |
| 11 | Araraquara | 9 | Poços de Caldas |
| 15 | Itajubá | 9 | Poços de Caldas |
| 11 | Araraquara | 10 | Assis |
| 12 | Marimbondo | 11 | Araraquara |
| 14 | Campinas | 11 | Araraquara |
| 13 | Água Vermelha | 12 | Marimbondo |
| 16 | Itumbiara | 12 | Marimbondo |
| 23 | São Simão | 13 | Água Vermelha |
| 19 | Ibiúna | 14 | Campinas |

| Barra de Origem | | Barra de Destino | |
|---|---|---|---|
| Número | Nome | Número | Nome |
| 20 | Cachoeira Paulista | 14 | Campinas |
| 20 | Cachoeira Paulista | 15 | Itajubá |
| 17 | Samambaia | 16 | Itumbiara |
| 18 | Emborcação | 16 | Itumbiara |
| 23 | São Simão | 16 | Itumbiara |
| 18 | Emborcação | 17 | Samambaia |
| 22 | Nova Ponte | 18 | Emborcação |
| 21 | Tijuco Preto | 20 | Cachoeira Paulista |
| 24 | Jaguará | 22 | Nova Ponte |
| 24 | Jaguará | 23 | São Simão |

A Figura 11 ilustra as bacias geográficas existentes no Brasil, bem como as usinas e linhas de transmissão em estudo. Com o intuito de melhor visualizar a região em análise, é apresentada a Figura 12.

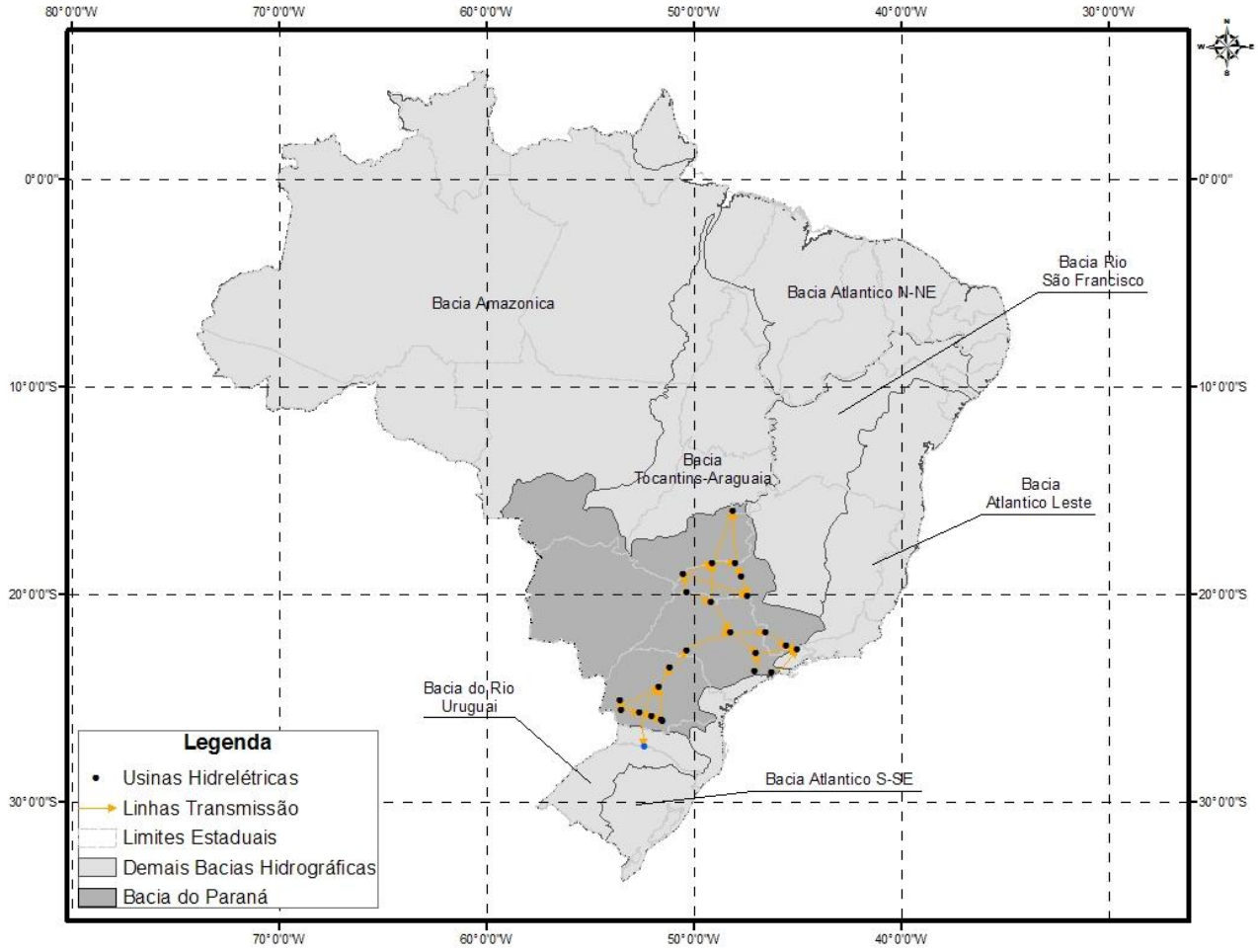


**Figura 11 – Bacias hidrográficas no Brasil e usinas em estudo**

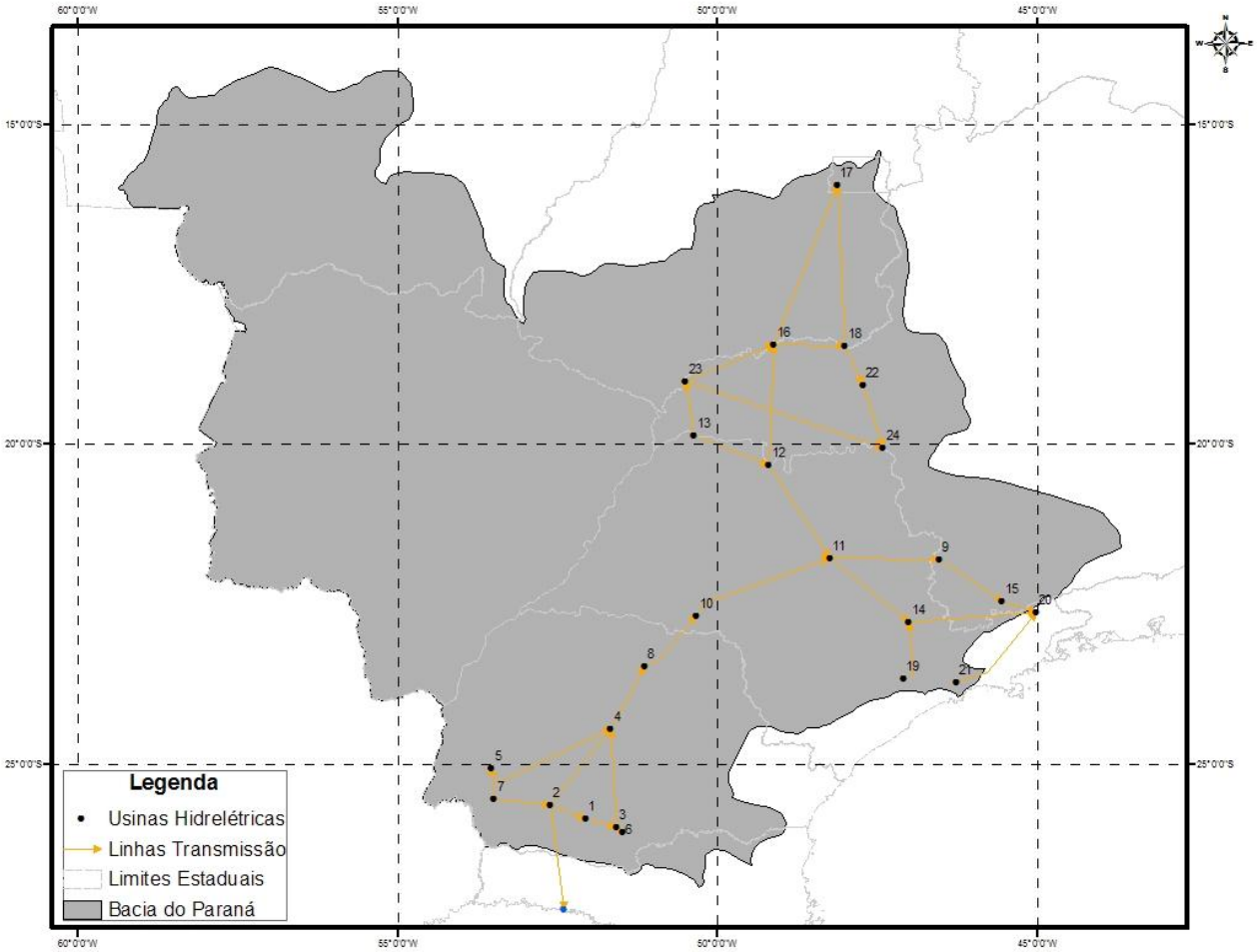


**Figura 12 – Localização das usinas em estudo na Bacia do Paraná**

Para tal elaboração, utilizou-se o mapeamento das usinas obtido a partir do Operador Nacional do Sistema Elétrico, o qual contém a localização georreferenciada de todas as usinas, suas respectivas subestações e linhas de transmissão.

O arquivo de dados, em que constam os fluxos de potências ativa, as cargas e as gerações, foi retirado do site do ONS, o qual foi ajustado (previsão) para o mês de setembro de 2006. Está descrito no Anexo 3 que este arquivo encontra-se em anexo a dissertação, por causa de seu tamanho.

De posse desses dados gerou-se o esquema apresentado na Figura 13, onde são representados os fluxos de potência, geração e carga alocados em cada barra.

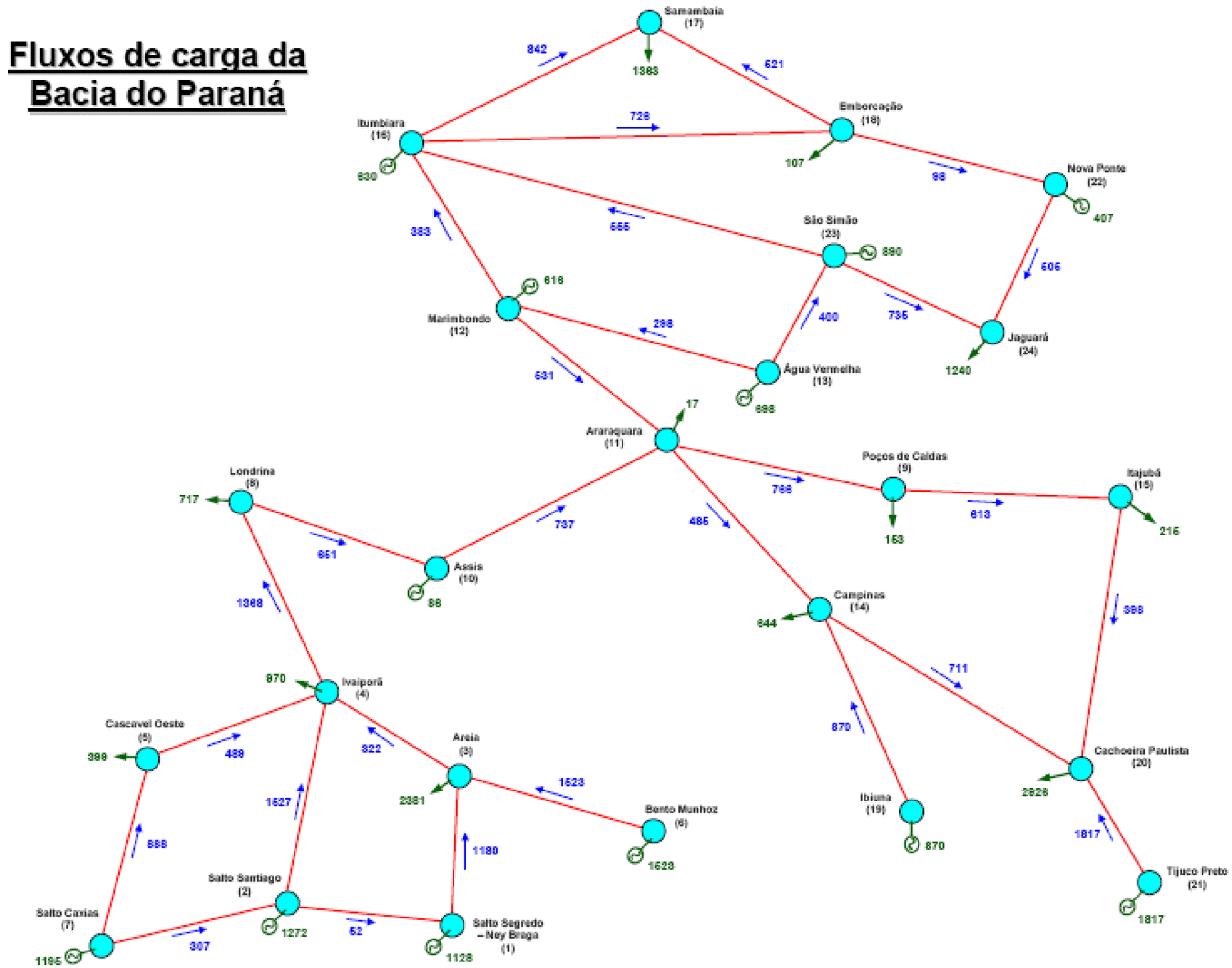


**Figura 13 - Fluxo de carga da Bacia do Paraná nas barras de 500 kV**

Observa-se, na Figura 13, que há regiões sensíveis neste sistema, como, por exemplo, a barra de carga de Araraquara. Os barramentos de Ivaiporã (carga) e Itumbiara (geração) são pontos críticos também, pois estão conectados a quatro barras cada uma.

### 4.3.3 Simulação e resultados

De acordo com a metodologia descrita no “modelo de fluxo de carga energético”, executou-se a simulação do programa em Matlab para os dados da Bacia do Paraná.

Abaixo seguem os dados de entrada, a matriz P (fluxo de potências) e os vetores G (geração) e L (carga), que foram utilizados para a simulação de minimização dos fluxos que circulam pelas linhas de transmissão do sistema de 500 kV da Bacia do Paraná, através do programa desenvolvido para a modelagem:

**Matriz P**

| | 1 | 2 | 3 | 4 | 5 | 6 | 7 | 8 | 9 | 10 | 11 | 12 | 13 | 14 | 15 | 16 | 17 | 18 | 19 | 20 | 21 | 22 | 23 | 24 |
|---|---|---|---|---|---|---|---|---|---|---|---|---|---|---|---|---|---|---|---|---|---|---|---|---|
| **1** | 0 | 52 | -1180 | 0 | 0 | 0 | 0 | 0 | 0 | 0 | 0 | 0 | 0 | 0 | 0 | 0 | 0 | 0 | 0 | 0 | 0 | 0 | 0 | 0 |
| **2** | -52 | 0 | 0 | -1527 | 0 | 0 | 307 | 0 | 0 | 0 | 0 | 0 | 0 | 0 | 0 | 0 | 0 | 0 | 0 | 0 | 0 | 0 | 0 | 0 |
| **3** | 1180 | 0 | 0 | -322 | 0 | 1523 | 0 | 0 | 0 | 0 | 0 | 0 | 0 | 0 | 0 | 0 | 0 | 0 | 0 | 0 | 0 | 0 | 0 | 0 |
| **4** | 0 | 1527 | 322 | 0 | 489 | 0 | 0 | -1368 | 0 | 0 | 0 | 0 | 0 | 0 | 0 | 0 | 0 | 0 | 0 | 0 | 0 | 0 | 0 | 0 |
| **5** | 0 | 0 | 0 | -489 | 0 | 0 | 888 | 0 | 0 | 0 | 0 | 0 | 0 | 0 | 0 | 0 | 0 | 0 | 0 | 0 | 0 | 0 | 0 | 0 |
| **6** | 0 | 0 | -1523 | 0 | 0 | 0 | 0 | 0 | 0 | 0 | 0 | 0 | 0 | 0 | 0 | 0 | 0 | 0 | 0 | 0 | 0 | 0 | 0 | 0 |
| **7** | 0 | -307 | 0 | 0 | -888 | 0 | 0 | 0 | 0 | 0 | 0 | 0 | 0 | 0 | 0 | 0 | 0 | 0 | 0 | 0 | 0 | 0 | 0 | 0 |
| **8** | 0 | 0 | 0 | 1368 | 0 | 0 | 0 | 0 | 0 | -651 | 0 | 0 | 0 | 0 | 0 | 0 | 0 | 0 | 0 | 0 | 0 | 0 | 0 | 0 |
| **9** | 0 | 0 | 0 | 0 | 0 | 0 | 0 | 0 | 0 | 0 | 766 | 0 | 0 | 0 | -613 | 0 | 0 | 0 | 0 | 0 | 0 | 0 | 0 | 0 |
| **10** | 0 | 0 | 0 | 0 | 0 | 0 | 0 | 651 | 0 | 0 | -737 | 0 | 0 | 0 | 0 | 0 | 0 | 0 | 0 | 0 | 0 | 0 | 0 | 0 |
| **11** | 0 | 0 | 0 | 0 | 0 | 0 | 0 | 0 | -766 | 737 | 0 | 531 | 0 | -485 | 0 | 0 | 0 | 0 | 0 | 0 | 0 | 0 | 0 | 0 |
| **12** | 0 | 0 | 0 | 0 | 0 | 0 | 0 | 0 | 0 | 0 | -531 | 0 | 298 | 0 | 0 | -383 | 0 | 0 | 0 | 0 | 0 | 0 | 0 | 0 |
| **13** | 0 | 0 | 0 | 0 | 0 | 0 | 0 | 0 | 0 | 0 | 0 | -298 | 0 | 0 | 0 | 0 | 0 | 0 | 0 | 0 | 0 | 0 | -400 | 0 |
| **14** | 0 | 0 | 0 | 0 | 0 | 0 | 0 | 0 | 0 | 0 | 485 | 0 | 0 | 0 | 0 | 0 | 0 | 0 | 870 | -711 | 0 | 0 | 0 | 0 |
| **15** | 0 | 0 | 0 | 0 | 0 | 0 | 0 | 0 | 613 | 0 | 0 | 0 | 0 | 0 | 0 | 0 | 0 | 0 | 0 | -398 | 0 | 0 | 0 | 0 |
| **16** | 0 | 0 | 0 | 0 | 0 | 0 | 0 | 0 | 0 | 0 | 0 | 383 | 0 | 0 | 0 | 0 | -842 | -726 | 0 | 0 | 0 | 0 | 555 | 0 |
| **17** | 0 | 0 | 0 | 0 | 0 | 0 | 0 | 0 | 0 | 0 | 0 | 0 | 0 | 0 | 0 | 842 | 0 | 521 | 0 | 0 | 0 | 0 | 0 | 0 |
| **18** | 0 | 0 | 0 | 0 | 0 | 0 | 0 | 0 | 0 | 0 | 0 | 0 | 0 | 0 | 0 | 726 | -521 | 0 | 0 | 0 | 0 | -98 | 0 | 0 |
| **19** | 0 | 0 | 0 | 0 | 0 | 0 | 0 | 0 | 0 | 0 | 0 | 0 | 0 | -870 | 0 | 0 | 0 | 0 | 0 | 0 | 0 | 0 | 0 | 0 |
| **20** | 0 | 0 | 0 | 0 | 0 | 0 | 0 | 0 | 0 | 0 | 0 | 0 | 0 | 711 | 398 | 0 | 0 | 0 | 0 | 0 | 1817 | 0 | 0 | 0 |

| | 1 | 2 | 3 | 4 | 5 | 6 | 7 | 8 | 9 | 10 | 11 | 12 | 13 | 14 | 15 | 16 | 17 | 18 | 19 | 20 | 21 | 22 | 23 | 24 |
|---|---|---|---|---|---|---|---|---|---|---|---|---|---|---|---|---|---|---|---|---|---|---|---|---|
| 21 | 0 | 0 | 0 | 0 | 0 | 0 | 0 | 0 | 0 | 0 | 0 | 0 | 0 | 0 | 0 | 0 | 0 | 0 | 0 | -1817 | 0 | 0 | 0 | 0 |
| 22 | 0 | 0 | 0 | 0 | 0 | 0 | 0 | 0 | 0 | 0 | 0 | 0 | 0 | 0 | 0 | 0 | 0 | 98 | 0 | 0 | 0 | 0 | 0 | -505 |
| 23 | 0 | 0 | 0 | 0 | 0 | 0 | 0 | 0 | 0 | 0 | 0 | 0 | 400 | 0 | 0 | -555 | 0 | 0 | 0 | 0 | 0 | 0 | 0 | -735 |
| 24 | 0 | 0 | 0 | 0 | 0 | 0 | 0 | 0 | 0 | 0 | 0 | 0 | 0 | 0 | 0 | 0 | 0 | 0 | 0 | 0 | 0 | 505 | 735 | 0 |

**Vetor G**

| 1 | 2 | 3 | 4 | 5 | 6 | 7 | 8 | 9 | 10 | 11 | 12 | 13 | 14 | 15 | 16 | 17 | 18 | 19 | 20 | 21 | 22 | 23 | 24 |
|---|---|---|---|---|---|---|---|---|---|---|---|---|---|---|---|---|---|---|---|---|---|---|---|
| 1128 | 1272 | 0 | 0 | 0 | 1523 | 1195 | 0 | 0 | 86 | 0 | 616 | 698 | 0 | 0 | 630 | 0 | 0 | 870 | 0 | 1817 | 407 | 890 | 0 |

**Vetor L**

| 1 | 2 | 3 | 4 | 5 | 6 | 7 | 8 | 9 | 10 | 11 | 12 | 13 | 14 | 15 | 16 | 17 | 18 | 19 | 20 | 21 | 22 | 23 | 24 |
|---|---|---|---|---|---|---|---|---|---|---|---|---|---|---|---|---|---|---|---|---|---|---|---|
| 0 | 0 | 2381 | 970 | 399 | 0 | 0 | 717 | 153 | 0 | 17 | 0 | 0 | 644 | 215 | 0 | 1363 | 107 | 0 | 2926 | 0 | 0 | 0 | 1240 |

Como resultado apresenta-se, primeiramente, a Tabela 10 onde estão representadas todas as contribuições das gerações em cada linha de transmissão.

Em seguida, segue a Tabela 11 que apresenta quanto de cada geração está chegando a cada uma das barras do sistema, em MW.

**Tabela 10 - Percentagens das gerações em cada LT**

| LT | BARRAS COM GERAÇÃO | | | | | | | | | | | |
|---|---|---|---|---|---|---|---|---|---|---|---|---|
| | 1 | 2 | 6 | 7 | 10 | 12 | 13 | 16 | 19 | 21 | 22 | 23 |
| 2-1 | | 0,0409 | | | | | | | | | | |
| 3-1 | 1,0000 | 0,0409 | | | | | | | | | | |
| 4-2 | | 0,9591 | | 0,2569 | | | | | | | | |
| 7-2 | | | | 0,2569 | | | | | | | | |
| 4-3 | 0,2855 | | | | | | | | | | | |
| 6-3 | | | 1,0000 | | | | | | | | | |
| 5-4 | | | | 0,4092 | | | | | | | | |
| 8-4 | | 0,1965 | 0,0105 | | | | | | | 0,6065 | | |
| 7-5 | | | | 0,7431 | | | | | | | | |
| 10-8 | | | 0,1116 | | | | 0,1375 | | | 0,2119 | | |
| 11-9 | | | 0,1005 | | 0,8023 | 0,0373 | 0,2192 | | | 0,2025 | | |
| 15-9 | | 0,3129 | | | | | | | | 0,1183 | | |

| LT | BARRAS COM GERAÇÃO | | | | | | | | | | | |
|---|---|---|---|---|---|---|---|---|---|---|---|---|
| | 1 | 2 | 6 | 7 | 10 | 12 | 13 | 16 | 19 | 21 | 22 | 23 |
| 11-10 | | | 0,1116 | | 1,0000 | | 0,1375 | | | 0,2119 | | |
| 12-11 | | | | | | 0,7419 | 0,1060 | | | | | |
| 14-11 | | 0,0535 | | | | 0,6769 | | | | | | |
| 13-12 | | | | | | | 0,4269 | | | | | |
| 16-12 | | | | | | 0,2581 | 0,3209 | | | | | |
| 23-13 | | | | | | | 0,5731 | | | | | |
| 19-14 | | | | | | | | | 1,0000 | | | |
| 20-14 | | | | | | | | | 0,2598 | 0,2669 | | |
| 20-15 | | 0,1439 | 0,1412 | | | | | | | | | |
| 17-16 | | | | | | 0,2581 | 0,0759 | 1,0000 | | | | |
| 18-16 | | | | | | | 0,2450 | | | | | 0,6236 |
| 23-16 | | | | | | | | | | | | 0,6236 |
| 18-17 | | | | | | | 0,0917 | | | 0,0050 | | 0,5034 |
| 22-18 | | | | | | | | | | 0,0539 | | |
| 21-20 | | | | | | | | | | 1,0000 | | |
| 24-22 | | | | | | | | | | 0,0539 | 1,0000 | |
| 24-23 | | | | | | | 0,5731 | | | | | 0,3764 |

**Tabela 11 - Gerações chegando às barras, em MW**

| Barras | | Gerações | | | | | | | | | | | | Soma |
|---|---|---|---|---|---|---|---|---|---|---|---|---|---|---|
| Número | Nome | 1 | 2 | 6 | 7 | 10 | 12 | 13 | 16 | 19 | 21 | 22 | 23 | |
| 1 | Salto Segredo | 1128 | 52 | | | | | | | | | | | 1180 |
| 2 | Salto Santiago | | 1272 | | 307 | | | | | | | | | 1579 |
| 3 | Areia | 1128 | 52 | 1523 | | | | | | | | | | 2703 |
| 4 | Ivaiporã | 322 | 1220 | | 796 | | | | | | | | | 2338 |
| 5 | Cascavel Oeste | | | | 888 | | | | | | | | | 888 |
| 6 | Gov. Bento Munhoz | | | 1523 | | | | | | | | | | 1523 |
| 7 | Salto Caxias | | | | 1195 | | | | | | | | | 1195 |
| 8 | Londrina | | 250 | 16 | | | | | | | 1102 | | | 1368 |
| 9 | Poços de Caldas | | | 153 | | 69 | 23 | 153 | | | 368 | | | 766 |
| 10 | Assis | | | 170 | | 86 | | 96 | | | 385 | | | 737 |
| 11 | Araraquara | | | 170 | | 86 | 457 | 170 | | | 385 | | | 1268 |
| 12 | Marimbondo | | | | | | 616 | 298 | | | | | | 914 |
| 13 | Água Vermelha | | | | | | | 698 | | | | | | 698 |
| 14 | Campinas | | 68 | | | | 417 | | | 870 | | | | 1355 |
| 15 | Itajubá | | 398 | | | | | | | | 215 | | | 613 |
| 16 | Itumbiara | | | | | | 159 | 224 | 630 | | | | 555 | 1568 |
| 17 | Samambaia | | | | | | 159 | 117 | 630 | | 9 | | 448 | 1363 |
| 18 | Emborcação | | | | | | | 171 | | | | | 555 | 726 |
| 19 | Ibiuna | | | | | | | | | 870 | | | | 870 |
| 20 | Cachoeira Paulista | | 183 | 215 | | | | | | 226 | 2302 | | | 2926 |
| 21 | Tijuco Preto | | | | | | | | | | 1817 | | | 1817 |
| 22 | Nova Ponte | | | | | | | | | | 98 | 407 | | 505 |
| 23 | São Simão | | | | | | | 400 | | | | | 890 | 1290 |
| 24 | Jaguará | | | | | | | 400 | | | 98 | 407 | 335 | 1240 |

A Tabela 12 apresenta a Matriz de Impacto, que visa mostrar, de maneira simples e visual, a influência nas diversas gerações (ou grupos de geração) nas distintas barras.

**Tabela 12 - Matriz de Impacto (Gerações chegando nas barras em %)**

| Barras | | Gerações | | | | | | | | | | | |
|---|---|---|---|---|---|---|---|---|---|---|---|---|---|
| Número | Nome | 1 | 2 | 6 | 7 | 10 | 12 | 13 | 16 | 19 | 21 | 22 | 23 |
| 1 | Salto Segredo | 0,96 | 0,04 | | | | | | | | | | |
| 2 | Salto Santiago | | 0,81 | | 0,19 | | | | | | | | |
| 3 | Areia | 0,42 | 0,02 | 0,56 | | | | | | | | | |
| 4 | Ivaiporã | 0,14 | 0,52 | | 0,34 | | | | | | | | |
| 5 | Cascavel Oeste | | | | 1,00 | | | | | | | | |
| 6 | Gov. Bento Munhoz | | | 1,00 | | | | | | | | | |
| 7 | Salto Caxias | | | | 1,00 | | | | | | | | |
| 8 | Londrina | | 0,18 | 0,01 | | | | | | | 0,81 | | |
| 9 | Poços de Caldas | | | 0,20 | | 0,09 | 0,03 | 0,20 | | | 0,48 | | |
| 10 | Assis | | | 0,23 | | 0,12 | | 0,13 | | | 0,52 | | |
| 11 | Araraquara | | | 0,13 | | 0,07 | 0,36 | 0,13 | | | 0,30 | | |
| 12 | Marimbondo | | | | | | 0,67 | 0,33 | | | | | |
| 13 | Água Vermelha | | | | | | | 1,00 | | | | | |
| 14 | Campinas | | 0,05 | | | | 0,31 | | | 0,64 | | | |
| 15 | Itajubá | | 0,65 | | | | | | | | 0,35 | | |
| 16 | Itumbiara | | | | | | 0,10 | 0,14 | 0,40 | | | | 0,35 |
| 17 | Samambaia | | | | | | 0,12 | 0,09 | 0,46 | | 0,01 | | 0,33 |
| 18 | Emborcação | | | | | | | 0,24 | | | | | 0,76 |
| 19 | Ibiuna | | | | | | | | | 1,00 | | | |
| 20 | Cachoeira Paulista | | 0,06 | 0,07 | | | | | | 0,08 | 0,79 | | |
| 21 | Tijuco Preto | | | | | | | | | | 1,00 | | |
| 22 | Nova Ponte | | | | | | | | | | 0,19 | 0,81 | |
| 23 | São Simão | | | | | | | 0,31 | | | | | 0,69 |
| 24 | Jaguará | | | | | | | 0,32 | | | 0,08 | 0,33 | 0,27 |

Pode-se observar que a barra 15 (Itajubá), considerada uma barra de carga do sistema, é impactada pelas barras 2 (Salto Santiago) e 21 (Tijuco Preto) em 65% e 35%, respectivamente. Geograficamente, a barra de Itajubá, que se localiza no

Estado de Minas Gerais, está mais próxima da barra de Tijuco Preto, em São Paulo, do que a barra de Salto Santiago, que se encontra no Paraná. São duas barras que possuem grandes gerações conectadas a elas, se comparadas com outras barras existentes no caminho até Itajubá.

Quase 80% do impacto existente na barra 20 (Cachoeira Paulista) é causado pela barra 21 (Tijuco Preto), uma vez que as barras estão conectadas entre si.

Outra observação importante é que a geração oriunda de Tijuco Preto impacta, em mais de 50%, a barra 10 (Assis), apesar desta barra possuir uma geração, que corresponde a um impacto pequeno de 12% apenas, ou seja, a barra de Assis é impactada três vezes mais pela geração de Tijuco Preto do que pela sua própria geração.

# 5 CONCLUSÕES E RECOMENDAÇÕES

O principal objetivo deste trabalho foi alcançado: determinar quais geradores são responsáveis por quais cargas em um sistema elétrico. Ou, de forma mais ampla, quais gerações não são responsáveis pelo atendimento a uma determinada carga.

Acredita-se que o modelo matemático desenvolvido é suficientemente robusto para análises diversas, e, de forma complementar, a metodologia de redução de sistemas apresentada permite dirigir o foco para as áreas de interesse. Isto permitiu a utilização de programas computacionais correntes no mercado (SOLVER/EXCEL e MATLAB).

Embora tenha se falado de custos, a análise desenvolvida é predominantemente técnica, podendo respaldar análises econômicas, de forma complementar. Recomenda-se desenvolvimentos neste sentido. Vê-se as áreas de confiabilidade e de mercado como sendo campos fecundos para a aplicação do modelo.

Finalmente, o fato de se partir de um fluxo de carga pré-determinado, seja ele teórico, calculado segundo determinada metodologia, seja ele real, com as medições do sistema em um certo estado de carga, amplia o escopo de aplicação do modelo proposto e evidencia a diferença deste de modelos corrente, como os de fluxo de carga ótimo ou despacho ótimo.

# 6 REFERÊNCIAS BIBLIOGRÁFICAS


Alsac, O., Stott, B., **Experience with Linear Programming for Optimal Rescheduling of Active and Reactive Power**, CIGRE/IFAC Symposium on Control Applications to Power System Security, Florença, 1983.

Araújo, L. R., **Uma Contribuição ao Fluxo de Potência Ótimo Aplicado a Sistemas de Potência Trifásicos usando o Método dos Pontos Interiores**, Tese de Doutorado. COPPE – UFRJ, Rio de Janeiro, 2005.

Baptista, E. C., at al., **Um método primal-dual aplicado na resolução do problema de fluxo de potência ótimo**, Pesquisa Operacional, v.24, n.2, p.215-226, 2004.

Bazaraa, M. S., Sherali, H. D., Shetty, C. M.; **Nonlinear programming, theory and algorithms**, 2 ed. John Wiley & Sons, Inc, 1993.

Brameller, A., Allan, R. N., Hamam Y. M., **Sparsity: Its Practical Application to Systems Analysis**, Pitman Publishing, London, 177 pp, 1976.

Burchett, R. C.; Happ, H. H.; Vierath, D. R., **Quadratically Convergent Optimal Power Flow**, *IEEE Transactions on Power Apparatus and Systems*, PAS-103(11):3267–3275, 1984.

Carpentier, J., **Contribution to the Economic Dispatch Problem**, (in French). Bulletin Society Française Electriciens, 3(8):431–447, 1962.

Costa, L. S., **Pesquisa Operacional**, Instituto de Física – IFD, Universidade de Brasília – UnB, 2004.

Cruz, R. A. P., Santos, A. H. M., Garcia, M. A. R. A., Perico, A. C. S., Corrêa, A. S. P. (2006), **Fluxos Energéticos: Uma Proposta Metodológica para a Espacialização dos Impactos da Geração**, V Congresso Brasileiro de Planejamento Energético, Sociedade Brasileira de Planejamento Energético. Brasília.

Davison, G. R., **Dividing Load between Units**, Electrical World, 1922.

Dommel, H. W.; Tinney, W. F., **Optimal Power Flow Solutions**, *IEEE Transactions on Power Apparatus and Systems*, PAS-87(10):1866–1876, 1968.

Ferreira, C., **Análise de Sistemas de Potência**, Universidade Federal de Itajubá, Itajubá, 2002.

Flores, M. J. R., **Planejamento da Expansão de Sistemas de Transmissão Usando os Modelos CC – CA e Técnicas de Programação Não – Linear**, Tese de Doutorado, Faculdade de Engenharia Elétrica e de Computação, Universidade Estaudal de Campinas, 2006.

Granville, S., **Optimal Reactive Dispatch Through Interior Point Methods**, IEEE Trans. Power Syst., vol. 9, no. 1, pp. 136–146, 1994.

Haffner, S., **Princípios de Modelagem e Análise de Sistemas Elétricos em Regime Permanente**, notas de aula para a disciplina de Introdução a Sistemas de Energia Elétrica do curso de graduação em Engenharia Elétrica, Pontifícia Universidade Católica do Rio Grande do Sul, 2007.

Kirschen, D.; Allan, R.; Strbac, G., **Contributions of Individual Generators to Loads and Flows**, IEEE Trans. Power Syst., vol. 12, no. 1, pp. 52–60, 1997.

Kuhn, H. W.; Tucker, A. W., **Nonlinear Programming**, Proceedings of the second Berkeley Symposium on Mathematical Satistics and Probability, University of California Press, 1951.

Lescano, G. M. A., **Um Modelo de Despacho Econômico para Reservas Operativas**, Dissertação de Mestrado, Faculdade de Engenharia Elétrica e de Computação, Universidade Estadual de Campinas, 2004.

Lima, F. G. M, **Estudos de Fluxo de Potência Ótimo Via Otimização Paramétrica**, Dissertação de Mestrado, Faculdade de Engenharia Elétrica, Universidade Estadual de Campinas, 1993.

Lindo System, Inc., disponível em http://www.lindo.com – Acesso em setembro de 2007.

Microsoft Corporation, disponível em http://www.microsoft.com – Acesso em setembro de 2007.

Mikilita, M. A. S., **Um Modelo de Fluxo de Potência Ótimo para Minimização do Corte de Carga**, Dissertação de Mestrado, Programa de Pós-Graduação em Engenharia Elétrica da Universidade Federal do Paraná, 2005.

Monticelli, A., **Fluxo de Carga em Redes de Energia Elétrica**, Editora Edgard Blucher Ltda., São Paulo, 1983.

Oliveira, A. R. L., Filho, S. S., **Métodos de pontos interiores para problemas de fluxo de potência ótimo DC**, Revista Controle & Automação. Vol. 14 nº 3, 2003.

Operador Nacional do Sistema Elétrico, disponível em http://www.ons.org.br – Acesso em abril de 2006.

Ribeiro, P. M., **Remuneração dos Serviços Ancilares de Reserva de Potência e Suporte de Potência Reativa quando Providos por Geradores**, Dissertação de Mestrado, Pontifícia Universidade Católica do Rio de Janeiro, Departamento de Engenharia Elétrica, 2005.

Rosehart, W. D; Cañizares, C. A; Quintana, V. H., **Multiobjective Optimal Power Flow to Evaluate Voltage Security Costs in Power Networks**, IEEE Trans. Power Syst., vol. 18, N$^{o}$. 2, pp.578-587, 2003.

Ruiz, J. C. M.; Mesa, S. E. C., **Modelo de Despacho Econômico do Sistema Elétrico Colombiano e Expansão Elétrica**, X Simpósio de Especialistas em Planejamento da Operação, Florianópolis, 2006.

Sakarovitch, M., **Notes on Linear Programming**, Van Nostrand-Reinhold, New York, 175 pp., 1971.

Santos, A. H. M., Garcia, M. A. R. A.; Júnior, L. U. R.; Masseli, S., **Impacto da Redução do Volume Útil de Reservatórios de UHE em Função do Aumento da Oferta de Termeletricidade**, IV Congresso Brasileiro de Planejamento Energético, Sociedade Brasileira de Planejamento Energético. Itajubá, 2004.

Santos, A. H. M., Garcia, M. A. R. A.; Júnior, L. U. R.; Haddad, J.; Bortoni, E. C., **Elaboração de Estudos de Revisão de Critérios Operativos dos Reservatórios do Sistema Interligado Nacional buscando Oportunidades para a Geração Termelétrica**, XVI Simpósio Brasileiro de Recursos Hídricos, Associação Brasileira de Recursos Hídricos. João Pessoa, 2005.

Silva, L. C., **Fundamentos de Programação Linear – PL**, Departamento de Engenharia Rural, Universidade Federal de Espírito Santo, 2006.

Steinberg, M. J.; Smith, T. H., **The Theory of Incremental Rates**, Vol. I and Vol. II, Electrical Engineering, 1934.

Stott, B., Marinho, J. L., **Linear Programming for Power-System Network Security Applications**, *IEEE Transactions on Power Apparatus and Systems*, PAS-98(3):837–848, 1979.

Sulaiman, M.H.; Aliman, O.; Mustafa, M.W.; Daut, I., **Tracing Generators' Output in Transmission Open Access**, Research and Development, 2007. SCOReD 2007. 5th Student Conference, 12-11 Dec 2007, Selangor, Malaysia.

Sun, D. I.; Ashley, B.; Brewer, B.; Hughes, A.; Tinney, W. F., **Optimal Power Flow by Newton Approach**. *IEEE Transactions on Power Apparatus and Systems*, PAS-103(10):2864–2880, 1984.

Tinney, W. F.; Walker, J. M., **Direct Solutions of Sparse Newtwork Equations by Optimally Ordered Triangular Factorization**, Proc. IEEE, Vol. 55, pp 1801-1809, 1967.

Wu, Yu-Chi Y.; Debs, A. S.; Marsten, R. E., **A Direct Nonlinear Predictor-Corrector Primal-Dual Interior Point Algorithm for Optimal Power Flows**, IEEE Transactions on Power Systems, vol. 9, pp. 876-883, 1994.

.

# ANEXO 1
# Dados do ONS

ANUAL 06/07 * SETEMBRO 2006 PESADA S/SE 19H N/NE 19H * ANAT0 - FSE - C13
RELATORIO DE ERROS DE POTENCIA

| BARRA NUM. | ERRO DE POTENCIA MW | Mvar | BARRA NUM. | ERRO DE POTENCIA MW | Mvar | BARRA NUM. | ERRO DE POTENCIA MW | Mvar | BARRA NUM. | ERRO DE POTENCIA MW | Mvar | BARRA NUM. | ERRO DE POTENCIA MW | Mvar |
|---|---|---|---|---|---|---|---|---|---|---|---|---|---|---|
| 10 | 0.00 | 0.00 | 11 | 0.00 | 0.00 | 12 | 0.00 | 0.00 | 13 | 0.00 | 0.00 | 14 | 0.00 | 0.00 |
| 15 | 0.00 | 0.00 | 16 | 0.00 | 0.00 | 17 | 0.00 | 0.00 | 18 | 0.00 | 0.00 | 19 | 0.00 | 0.00 |
| 20 | 0.00 | 0.00 | 21 | 0.00 | 0.00 | 22 | 0.00 | 0.00 | 24 | 0.00 | 0.00 | 28 | 0.00 | 0.00 |
| 30 | 0.00 | 0.00 | 31 | 0.00 | 0.00 | 32 | 0.00 | 0.00 | 33 | 0.00 | 0.00 | 34 | 0.00 | 0.00 |
| 35 | 0.00 | 0.00 | 36 | 0.00 | 0.00 | 38 | 0.00 | 0.00 | 39 | 0.00 | 0.00 | 40 | 0.00 | 0.00 |
| 41 | 0.00 | 0.00 | 42 | 0.00 | 0.00 | 43 | 0.00 | 0.00 | 44 | 0.00 | 0.00 | 45 | 0.00 | 0.00 |
| 46 | 0.00 | 0.00 | 48 | 0.00 | 0.00 | 50 | 0.00 | 0.00 | 55 | 0.00 | 0.00 | 56 | 0.00 | 0.00 |
| 57 | 0.00 | 0.00 | 58 | 0.00 | 0.00 | 59 | 0.00 | 0.00 | 60 | 0.00 | 0.00 | 61 | 0.00 | 0.00 |
| 62 | 0.00 | 0.00 | 63 | 0.00 | 0.00 | 64 | 0.00 | 0.00 | 65 | 0.00 | 0.00 | 66 | 0.00 | 0.00 |
| 67 | 0.00 | 0.00 | 68 | 0.00 | 0.00 | 69 | 0.00 | 0.00 | 70 | 0.00 | 0.00 | 71 | 0.00 | 0.00 |
| 72 | 0.00 | 0.00 | 73 | 0.00 | 0.00 | 74 | 0.00 | 0.00 | 75 | 0.00 | 0.00 | 76 | 0.00 | 0.00 |
| 77 | 0.00 | 0.00 | 78 | 0.00 | 0.00 | 79 | 0.00 | 0.00 | 80 | 0.00 | 0.00 | 81 | 0.00 | 0.00 |
| 85 | 0.00 | 0.00 | 86 | 0.00 | 0.00 | 90 | 0.00 | 0.00 | 91 | 0.00 | 0.00 | 92 | 0.00 | 0.00 |
| 93 | 0.00 | 0.00 | 94 | 0.00 | 0.00 | 95 | 0.00 | 0.00 | 98 | 0.00 | 0.00 | 99 | 0.00 | 0.00 |
| 100 | 0.00 | 0.00 | 101 | 0.00 | 0.00 | 102 | 0.00 | 0.00 | 103 | 0.00 | 0.00 | 104 | 0.00 | 0.00 |
| 105 | 0.00 | 0.00 | 106 | 0.00 | 0.00 | 107 | 0.00 | 0.00 | 108 | 0.00 | 0.00 | 109 | 0.00 | 0.00 |
| 110 | 0.00 | 0.00 | 111 | 0.00 | 0.00 | 112 | 0.00 | 0.00 | 113 | 0.00 | 0.00 | 114 | 0.00 | 0.00 |
| 115 | 0.00 | 0.00 | 116 | 0.00 | 0.00 | 118 | 0.00 | 0.00 | 119 | 0.00 | 0.00 | 120 | 0.00 | 0.00 |
| 121 | 0.00 | 0.00 | 122 | 0.00 | 0.00 | 123 | 0.00 | 0.00 | 124 | 0.00 | 0.00 | 125 | 0.00 | 0.00 |
| 126 | 0.00 | 0.00 | 127 | 0.00 | 0.00 | 128 | 0.00 | 0.00 | 129 | 0.00 | 0.00 | 130 | 0.00 | 0.00 |
| 131 | 0.00 | 0.00 | 132 | 0.00 | 0.00 | 133 | 0.00 | 0.00 | 134 | 0.00 | 0.00 | 135 | 0.00 | 0.00 |
| 136 | 0.00 | 0.00 | 137 | 0.00 | 0.00 | 138 | 0.00 | 0.00 | 139 | 0.00 | 0.00 | 140 | 0.00 | 0.00 |
| 141 | 0.00 | 0.00 | 142 | 0.00 | 0.00 | 143 | 0.00 | 0.00 | 144 | 0.00 | 0.00 | 145 | 0.00 | 0.00 |
| 146 | 0.00 | 0.00 | 147 | 0.00 | 0.00 | 148 | 0.00 | 0.00 | 149 | 0.00 | 0.00 | 150 | 0.00 | 0.00 |
| 151 | 0.00 | 0.00 | 152 | 0.00 | 0.00 | 153 | 0.00 | 0.00 | 154 | 0.00 | 0.00 | 155 | 0.00 | 0.00 |
| 156 | 0.00 | 0.00 | 157 | 0.00 | 0.00 | 158 | 0.00 | 0.00 | 159 | 0.00 | 0.00 | 160 | 0.00 | 0.00 |
| 161 | 0.00 | 0.00 | 162 | 0.00 | 0.00 | 163 | 0.00 | 0.00 | 164 | 0.00 | 0.00 | 165 | 0.00 | 0.00 |
| 166 | 0.00 | 0.00 | 167 | 0.00 | 0.00 | 168 | 0.00 | 0.00 | 169 | 0.00 | 0.00 | 170 | 0.00 | 0.00 |
| 171 | 0.00 | 0.00 | 172 | 0.00 | 0.00 | 173 | 0.00 | 0.00 | 174 | 0.00 | 0.00 | 175 | 0.00 | 0.00 |
| 176 | 0.00 | 0.00 | 177 | 0.00 | 0.00 | 178 | 0.00 | 0.00 | 179 | 0.00 | 0.00 | 180 | 0.00 | 0.00 |
| 181 | 0.00 | 0.00 | 182 | 0.00 | 0.00 | 183 | 0.00 | 0.00 | 184 | 0.00 | 0.00 | 185 | 0.00 | 0.00 |
| 186 | 0.00 | 0.00 | 187 | 0.00 | 0.00 | 188 | 0.00 | 0.00 | 189 | 0.00 | 0.00 | 190 | 0.00 | 0.00 |
| 191 | 0.00 | 0.00 | 192 | 0.00 | 0.00 | 193 | 0.00 | 0.00 | 194 | 0.00 | 0.00 | 195 | 0.00 | 0.00 |
| 196 | 0.00 | 0.00 | 197 | 0.00 | 0.00 | 198 | 0.00 | 0.00 | 199 | 0.00 | 0.00 | 200 | 0.00 | 0.00 |
| 201 | 0.00 | 0.00 | 202 | 0.00 | 0.00 | 203 | 0.00 | 0.00 | 204 | 0.00 | 0.00 | 205 | 0.00 | 0.00 |
| 206 | 0.00 | 0.00 | 207 | 0.00 | 0.00 | 208 | 0.00 | 0.00 | 209 | 0.00 | 0.00 | 210 | 0.00 | 0.00 |
| 211 | 0.00 | 0.00 | 212 | 0.00 | 0.00 | 213 | 0.00 | 0.00 | 214 | 0.00 | 0.00 | 215 | 0.00 | 0.00 |
| 216 | 0.00 | 0.00 | 217 | 0.00 | 0.00 | 218 | 0.00 | 0.00 | 219 | 0.00 | 0.00 | 220 | 0.00 | 0.00 |
| 221 | 0.00 | 0.00 | 222 | 0.00 | 0.00 | 223 | 0.00 | 0.00 | 224 | 0.00 | 0.00 | 225 | 0.00 | 0.00 |
| 226 | 0.00 | 0.00 | 227 | 0.00 | 0.00 | 228 | 0.00 | 0.00 | 229 | 0.00 | 0.00 | 230 | 0.00 | 0.00 |
| 231 | 0.00 | 0.00 | 232 | 0.00 | 0.00 | 233 | 0.00 | 0.00 | 234 | 0.00 | 0.00 | 235 | 0.00 | 0.00 |
| 236 | 0.00 | 0.00 | 237 | 0.00 | 0.00 | 238 | 0.00 | 0.00 | 239 | 0.00 | 0.00 | 240 | 0.00 | 0.00 |
| 241 | 0.00 | 0.00 | 242 | 0.00 | 0.00 | 243 | 0.00 | 0.00 | 244 | 0.00 | 0.00 | 245 | 0.00 | 0.00 |
| 246 | 0.00 | 0.00 | 247 | 0.00 | 0.00 | 248 | 0.00 | 0.00 | 249 | 0.00 | 0.00 | 250 | 0.00 | 0.00 |
| 251 | 0.00 | 0.00 | 252 | 0.00 | 0.00 | 253 | 0.00 | 0.00 | 254 | 0.00 | 0.00 | 255 | 0.00 | 0.00 |
| 256 | 0.00 | 0.00 | 257 | 0.00 | 0.00 | 258 | 0.00 | 0.00 | 259 | 0.00 | 0.00 | 260 | 0.00 | 0.00 |
| 261 | 0.00 | 0.00 | 262 | 0.00 | 0.00 | 263 | 0.00 | 0.00 | 264 | 0.00 | 0.00 | 265 | 0.00 | 0.00 |
| 266 | 0.00 | 0.00 | 267 | 0.00 | 0.00 | 268 | 0.00 | 0.00 | 269 | 0.00 | 0.00 | 270 | 0.00 | 0.00 |
| 271 | 0.00 | 0.00 | 272 | 0.00 | 0.00 | 273 | 0.00 | 0.00 | 274 | 0.00 | 0.00 | 275 | 0.00 | 0.00 |
| 276 | 0.00 | 0.00 | 277 | 0.00 | 0.00 | 278 | 0.00 | 0.00 | 279 | 0.00 | 0.00 | 280 | 0.00 | 0.00 |

ANUAL 06/07 * SETEMBRO 2006 PESADA S/SE 19H N/NE 19H * ANAT0 - FSE - C13
RELATORIO DE ERROS DE POTENCIA

| BARRA NUM. | ERRO DE POTENCIA MW | Mvar | BARRA NUM. | ERRO DE POTENCIA MW | Mvar | BARRA NUM. | ERRO DE POTENCIA MW | Mvar | BARRA NUM. | ERRO DE POTENCIA MW | Mvar | BARRA NUM. | ERRO DE POTENCIA MW | Mvar |
|---|---|---|---|---|---|---|---|---|---|---|---|---|---|---|
| 281 | 0.00 | 0.00 | 282 | 0.00 | 0.00 | 283 | 0.00 | 0.00 | 284 | 0.00 | 0.00 | 285 | 0.00 | 0.00 |
| 286 | 0.00 | 0.00 | 287 | 0.00 | 0.00 | 288 | 0.00 | 0.00 | 289 | 0.00 | 0.00 | 290 | 0.00 | 0.00 |
| 291 | 0.00 | 0.00 | 292 | 0.00 | 0.00 | 293 | 0.00 | 0.00 | 294 | 0.00 | 0.00 | 295 | 0.00 | 0.00 |
| 296 | 0.00 | 0.00 | 297 | 0.00 | 0.00 | 300 | 0.00 | 0.00 | 301 | 0.00 | 0.00 | 302 | 0.00 | 0.00 |
| 303 | 0.00 | 0.00 | 304 | 0.00 | 0.00 | 305 | 0.00 | 0.00 | 306 | 0.00 | 0.00 | 307 | 0.00 | 0.00 |
| 308 | 0.00 | 0.00 | 309 | 0.00 | 0.00 | 310 | 0.00 | 0.00 | 311 | 0.00 | 0.00 | 312 | 0.00 | 0.00 |
| 313 | 0.00 | 0.00 | 314 | 0.00 | 0.00 | 315 | 0.00 | 0.00 | 316 | 0.00 | 0.00 | 317 | 0.00 | 0.00 |
| 318 | 0.00 | 0.00 | 319 | 0.00 | 0.00 | 320 | 0.00 | 0.00 | 321 | 0.00 | 0.00 | 322 | 0.00 | 0.00 |
| 323 | 0.00 | 0.00 | 324 | 0.00 | 0.00 | 325 | 0.00 | 0.00 | 326 | 0.00 | 0.00 | 327 | 0.00 | 0.00 |
| 328 | 0.00 | 0.00 | 329 | 0.00 | 0.00 | 330 | 0.00 | 0.00 | 331 | 0.00 | 0.00 | 332 | 0.00 | 0.00 |
| 333 | 0.00 | 0.00 | 334 | 0.00 | 0.00 | 335 | 0.00 | 0.00 | 336 | 0.00 | 0.00 | 337 | 0.00 | 0.00 |
| 338 | 0.00 | 0.00 | 339 | 0.00 | 0.00 | 340 | 0.00 | 0.00 | 341 | 0.00 | 0.00 | 342 | 0.00 | 0.00 |
| 343 | 0.00 | 0.00 | 344 | 0.00 | 0.00 | 345 | 0.00 | 0.00 | 346 | 0.00 | 0.00 | 347 | 0.00 | 0.00 |
| 348 | 0.00 | 0.00 | 349 | 0.00 | 0.00 | 350 | 0.00 | 0.00 | 351 | 0.00 | 0.00 | 352 | 0.00 | 0.00 |
| 353 | 0.00 | 0.00 | 354 | 0.00 | 0.00 | 355 | 0.00 | 0.00 | 356 | 0.00 | 0.00 | 357 | 0.00 | 0.00 |
| 358 | 0.00 | 0.00 | 359 | 0.00 | 0.00 | 360 | 0.00 | 0.00 | 361 | 0.00 | 0.00 | 362 | 0.00 | 0.00 |
| 363 | 0.00 | 0.00 | 364 | 0.00 | 0.00 | 365 | 0.00 | 0.00 | 366 | 0.00 | 0.00 | 367 | 0.00 | 0.00 |
| 368 | 0.00 | 0.00 | 369 | 0.00 | 0.00 | 370 | 0.00 | 0.00 | 371 | 0.00 | 0.00 | 372 | 0.00 | 0.00 |
| 373 | 0.00 | 0.00 | 374 | 0.00 | 0.00 | 375 | 0.00 | 0.00 | 376 | 0.00 | 0.00 | 377 | 0.00 | 0.00 |
| 378 | 0.00 | 0.00 | 379 | 0.00 | 0.00 | 380 | 0.00 | 0.00 | 381 | 0.00 | 0.00 | 382 | 0.00 | 0.00 |
| 383 | 0.00 | 0.00 | 384 | 0.00 | 0.00 | 385 | 0.00 | 0.00 | 386 | 0.00 | 0.00 | 387 | 0.00 | 0.00 |
| 388 | 0.00 | 0.00 | 389 | 0.00 | 0.00 | 390 | 0.00 | 0.00 | 391 | 0.00 | 0.00 | 392 | 0.00 | 0.00 |
| 393 | 0.00 | 0.00 | 394 | 0.00 | 0.00 | 395 | 0.00 | 0.00 | 396 | 0.00 | 0.00 | 397 | 0.00 | 0.00 |
| 398 | 0.00 | 0.00 | 399 | 0.00 | 0.00 | 400 | 0.00 | 0.00 | 401 | 0.00 | 0.00 | 403 | 0.00 | 0.00 |
| 404 | 0.00 | 0.00 | 405 | 0.00 | 0.00 | 406 | 0.00 | 0.00 | 410 | 0.00 | 0.00 | 411 | 0.00 | 0.00 |
| 412 | 0.00 | 0.00 | 414 | 0.00 | 0.00 | 415 | 0.00 | 0.00 | 421 | 0.00 | 0.00 | 422 | 0.00 | 0.00 |
| 423 | 0.00 | 0.00 | 424 | 0.00 | 0.00 | 425 | 0.00 | 0.00 | 426 | 0.00 | 0.00 | 427 | 0.00 | 0.00 |
| 428 | 0.00 | 0.00 | 429 | 0.00 | 0.00 | 430 | 0.00 | 0.00 | 431 | 0.00 | 0.00 | 433 | 0.00 | 0.00 |
| 434 | 0.00 | 0.00 | 435 | 0.00 | 0.00 | 436 | 0.00 | 0.00 | 438 | 0.00 | 0.00 | 439 | 0.00 | 0.00 |
| 440 | 0.00 | 0.00 | 441 | 0.00 | 0.00 | 442 | 0.00 | 0.00 | 443 | 0.00 | 0.00 | 446 | 0.00 | 0.00 |
| 447 | 0.00 | 0.00 | 448 | 0.00 | 0.00 | 449 | 0.00 | 0.00 | 450 | 0.00 | 0.00 | 451 | 0.00 | 0.00 |
| 454 | 0.00 | 0.00 | 455 | 0.00 | 0.00 | 458 | 0.00 | 0.00 | 459 | 0.00 | 0.00 | 461 | 0.00 | 0.00 |
| 462 | 0.00 | 0.00 | 464 | 0.00 | 0.00 | 465 | 0.00 | 0.00 | 466 | 0.00 | 0.00 | 467 | 0.00 | 0.00 |
| 470 | 0.00 | 0.00 | 471 | 0.00 | 0.00 | 472 | 0.00 | 0.00 | 473 | 0.00 | 0.00 | 474 | 0.00 | 0.00 |
| 475 | 0.00 | 0.00 | 476 | 0.00 | 0.00 | 477 | 0.00 | 0.00 | 478 | 0.00 | 0.00 | 479 | 0.00 | 0.00 |
| 480 | 0.00 | 0.00 | 481 | 0.00 | 0.00 | 483 | 0.00 | 0.00 | 484 | 0.00 | 0.00 | 485 | 0.00 | 0.00 |
| 488 | 0.00 | 0.00 | 489 | 0.00 | 0.00 | 490 | 0.00 | 0.00 | 491 | 0.00 | 0.00 | 492 | 0.00 | 0.00 |
| 493 | 0.00 | 0.00 | 494 | 0.00 | 0.00 | 495 | 0.00 | 0.00 | 496 | 0.00 | 0.00 | 500 | 0.00 | 0.00 |
| 501 | 0.00 | 0.00 | 502 | 0.00 | 0.00 | 503 | 0.00 | 0.00 | 506 | 0.00 | 0.00 | 507 | 0.00 | 0.00 |
| 508 | 0.00 | 0.00 | 509 | 0.00 | 0.00 | 510 | 0.00 | 0.00 | 511 | 0.00 | 0.00 | 512 | 0.00 | 0.00 |
| 513 | 0.00 | 0.00 | 514 | 0.00 | 0.00 | 515 | 0.00 | 0.00 | 516 | 0.00 | 0.00 | 517 | 0.00 | 0.00 |
| 518 | 0.00 | 0.00 | 519 | 0.00 | 0.00 | 520 | 0.00 | 0.00 | 521 | 0.00 | 0.00 | 522 | 0.00 | 0.00 |
| 523 | 0.00 | 0.00 | 525 | 0.00 | 0.00 | 526 | 0.00 | 0.00 | 532 | 0.00 | 0.00 | 533 | 0.00 | 0.00 |
| 535 | 0.00 | 0.00 | 536 | 0.00 | 0.00 | 537 | 0.00 | 0.00 | 538 | 0.00 | 0.00 | 539 | 0.00 | 0.00 |
| 541 | 0.00 | 0.00 | 542 | 0.00 | 0.00 | 543 | 0.00 | 0.00 | 544 | 0.00 | 0.00 | 546 | 0.00 | 0.00 |
| 547 | 0.00 | 0.00 | 548 | 0.00 | 0.00 | 549 | 0.00 | 0.00 | 550 | 0.00 | 0.00 | 551 | 0.00 | 0.00 |
| 552 | 0.00 | 0.00 | 553 | 0.00 | 0.00 | 554 | 0.00 | 0.00 | 555 | 0.00 | 0.00 | 556 | 0.00 | 0.00 |
| 557 | 0.00 | 0.00 | 559 | 0.00 | 0.00 | 560 | 0.00 | 0.00 | 561 | 0.00 | 0.00 | 562 | 0.00 | 0.00 |
| 563 | 0.00 | 0.00 | 564 | 0.00 | 0.00 | 565 | 0.00 | 0.00 | 566 | 0.00 | 0.00 | 567 | 0.00 | 0.00 |
| 568 | 0.00 | 0.00 | 569 | 0.00 | 0.00 | 570 | 0.00 | 0.00 | 571 | 0.00 | 0.00 | 574 | 0.00 | 0.00 |

ANUAL 06/07 * SETEMBRO 2006 PESADA S/SE 19H N/NE 19H * ANAT0 - FSE - C13
RELATORIO DE ERROS DE POTENCIA

| BARRA NUM. | ERRO DE POTENCIA MW | Mvar | BARRA NUM. | ERRO DE POTENCIA MW | Mvar | BARRA NUM. | ERRO DE POTENCIA MW | Mvar | BARRA NUM. | ERRO DE POTENCIA MW | Mvar | BARRA NUM. | ERRO DE POTENCIA MW | Mvar |
|---|---|---|---|---|---|---|---|---|---|---|---|---|---|---|
| 575 | 0.00 | 0.00 | 576 | 0.00 | 0.00 | 578 | 0.00 | 0.00 | 579 | 0.00 | 0.00 | 581 | 0.00 | 0.00 |
| 582 | 0.00 | 0.00 | 583 | 0.00 | 0.00 | 584 | 0.00 | 0.00 | 585 | 0.00 | 0.00 | 590 | 0.00 | 0.00 |
| 591 | 0.00 | 0.00 | 593 | 0.00 | 0.00 | 594 | 0.00 | 0.00 | 595 | 0.00 | 0.00 | 598 | 0.00 | 0.00 |
| 599 | 0.00 | 0.00 | 600 | 0.00 | 0.00 | 601 | 0.00 | 0.00 | 606 | 0.00 | 0.00 | 607 | 0.00 | 0.00 |
| 611 | 0.00 | 0.00 | 612 | 0.00 | 0.00 | 613 | 0.00 | 0.00 | 614 | 0.00 | 0.00 | 615 | 0.00 | 0.00 |
| 616 | 0.00 | 0.00 | 618 | 0.00 | 0.00 | 619 | 0.00 | 0.00 | 620 | 0.00 | 0.00 | 621 | 0.00 | 0.00 |
| 622 | 0.00 | 0.00 | 623 | 0.00 | 0.00 | 624 | 0.00 | 0.00 | 625 | 0.00 | 0.00 | 626 | 0.00 | 0.00 |
| 628 | 0.00 | 0.00 | 629 | 0.00 | 0.00 | 630 | 0.00 | 0.00 | 631 | 0.00 | 0.00 | 633 | 0.00 | 0.00 |
| 634 | 0.00 | 0.00 | 635 | 0.00 | 0.00 | 636 | 0.00 | 0.00 | 638 | 0.00 | 0.00 | 639 | 0.00 | 0.00 |
| 640 | 0.00 | 0.00 | 641 | 0.00 | 0.00 | 642 | 0.00 | 0.00 | 644 | 0.00 | 0.00 | 645 | 0.00 | 0.00 |
| 646 | 0.00 | 0.00 | 647 | 0.00 | 0.00 | 648 | 0.00 | 0.00 | 649 | 0.00 | 0.00 | 650 | 0.00 | 0.00 |
| 652 | 0.00 | 0.00 | 653 | 0.00 | 0.00 | 654 | 0.00 | 0.00 | 655 | 0.00 | 0.00 | 656 | 0.00 | 0.00 |
| 657 | 0.00 | 0.00 | 658 | 0.00 | 0.00 | 659 | 0.00 | 0.00 | 661 | 0.00 | 0.00 | 663 | 0.00 | 0.00 |
| 665 | 0.00 | 0.00 | 671 | 0.00 | 0.00 | 672 | 0.00 | 0.00 | 673 | 0.00 | 0.00 | 674 | 0.00 | 0.00 |
| 675 | 0.00 | 0.00 | 676 | 0.00 | 0.00 | 677 | 0.00 | 0.00 | 678 | 0.00 | 0.00 | 679 | 0.00 | 0.00 |
| 680 | 0.00 | 0.00 | 681 | 0.00 | 0.00 | 683 | 0.00 | 0.00 | 685 | 0.00 | 0.00 | 686 | 0.00 | 0.00 |
| 687 | 0.00 | 0.00 | 689 | 0.00 | 0.00 | 692 | 0.00 | 0.00 | 693 | 0.00 | 0.00 | 694 | 0.00 | 0.00 |
| 695 | 0.00 | 0.00 | 696 | 0.00 | 0.00 | 699 | 0.00 | 0.00 | 700 | 0.00 | 0.00 | 701 | 0.00 | 0.00 |
| 702 | 0.00 | 0.00 | 703 | 0.00 | 0.00 | 704 | 0.00 | 0.00 | 705 | 0.00 | 0.00 | 707 | 0.00 | 0.00 |
| 708 | 0.00 | 0.00 | 709 | 0.00 | 0.00 | 710 | 0.00 | 0.00 | 711 | 0.00 | 0.00 | 712 | 0.00 | 0.00 |
| 713 | 0.00 | 0.00 | 716 | 0.00 | 0.00 | 717 | 0.00 | 0.00 | 720 | 0.00 | 0.00 | 721 | 0.00 | 0.00 |
| 723 | 0.00 | 0.00 | 724 | 0.00 | 0.00 | 725 | 0.00 | 0.00 | 726 | 0.00 | 0.00 | 727 | 0.00 | 0.00 |
| 728 | 0.00 | 0.00 | 729 | 0.00 | 0.00 | 730 | 0.00 | 0.00 | 731 | 0.00 | 0.00 | 732 | 0.00 | 0.00 |
| 734 | 0.00 | 0.00 | 739 | 0.00 | 0.00 | 740 | 0.00 | 0.00 | 741 | 0.00 | 0.00 | 742 | 0.00 | 0.00 |
| 743 | 0.00 | 0.00 | 744 | 0.00 | 0.00 | 745 | 0.00 | 0.00 | 746 | 0.00 | 0.00 | 747 | 0.00 | 0.00 |
| 748 | 0.00 | 0.00 | 749 | 0.00 | 0.00 | 750 | 0.00 | 0.00 | 751 | 0.00 | 0.00 | 752 | 0.00 | 0.00 |
| 753 | 0.00 | 0.00 | 754 | 0.00 | 0.00 | 755 | 0.00 | 0.00 | 756 | 0.00 | 0.00 | 759 | 0.00 | 0.00 |
| 760 | 0.00 | 0.00 | 761 | 0.00 | 0.00 | 762 | 0.00 | 0.00 | 763 | 0.00 | 0.00 | 764 | 0.00 | 0.00 |
| 765 | 0.00 | 0.00 | 766 | 0.00 | 0.00 | 767 | 0.00 | 0.00 | 768 | 0.00 | 0.00 | 769 | 0.00 | 0.00 |
| 770 | 0.00 | 0.00 | 771 | 0.00 | 0.00 | 772 | 0.00 | 0.00 | 773 | 0.00 | 0.00 | 774 | 0.00 | 0.00 |
| 775 | 0.00 | 0.00 | 776 | 0.00 | 0.00 | 777 | 0.00 | 0.00 | 778 | 0.00 | 0.00 | 779 | 0.00 | 0.00 |
| 780 | 0.00 | 0.00 | 781 | 0.00 | 0.00 | 782 | 0.00 | 0.00 | 783 | 0.00 | 0.00 | 784 | 0.00 | 0.00 |
| 786 | 0.00 | 0.00 | 787 | 0.00 | 0.00 | 788 | 0.00 | 0.00 | 789 | 0.00 | 0.00 | 790 | 0.00 | 0.00 |
| 791 | 0.00 | 0.00 | 792 | 0.00 | 0.00 | 793 | 0.00 | 0.00 | 794 | 0.00 | 0.00 | 795 | 0.00 | 0.00 |
| 796 | 0.00 | 0.00 | 797 | 0.00 | 0.00 | 798 | 0.00 | 0.00 | 799 | 0.00 | 0.00 | 800 | 0.00 | 0.00 |
| 801 | 0.00 | 0.00 | 802 | 0.00 | 0.00 | 803 | 0.00 | 0.00 | 804 | 0.00 | 0.00 | 805 | 0.00 | 0.00 |
| 806 | 0.00 | 0.00 | 807 | 0.00 | 0.00 | 808 | 0.00 | 0.00 | 809 | 0.00 | 0.00 | 810 | 0.00 | 0.00 |
| 811 | 0.00 | 0.00 | 813 | 0.00 | 0.00 | 814 | 0.00 | 0.00 | 815 | 0.00 | 0.00 | 816 | 0.00 | 0.00 |
| 817 | 0.00 | 0.00 | 818 | 0.00 | 0.00 | 819 | 0.00 | 0.00 | 820 | 0.00 | 0.00 | 821 | 0.00 | 0.00 |
| 822 | 0.00 | 0.00 | 823 | 0.00 | 0.00 | 824 | 0.00 | 0.00 | 825 | 0.00 | 0.00 | 826 | 0.00 | 0.00 |
| 827 | 0.00 | 0.00 | 828 | 0.00 | 0.00 | 829 | 0.00 | 0.00 | 830 | 0.00 | 0.00 | 831 | 0.00 | 0.00 |
| 832 | 0.00 | 0.00 | 833 | 0.00 | 0.00 | 834 | 0.00 | 0.00 | 835 | 0.00 | 0.00 | 836 | 0.00 | 0.00 |
| 837 | 0.00 | 0.00 | 838 | 0.00 | 0.00 | 839 | 0.00 | 0.00 | 840 | 0.00 | 0.00 | 841 | 0.00 | 0.00 |
| 842 | 0.00 | 0.00 | 844 | 0.00 | 0.00 | 845 | 0.00 | 0.00 | 846 | 0.00 | 0.00 | 847 | 0.00 | 0.00 |
| 848 | 0.00 | 0.00 | 849 | 0.00 | 0.00 | 850 | 0.00 | 0.00 | 851 | 0.00 | 0.00 | 852 | 0.00 | 0.00 |
| 853 | 0.00 | 0.00 | 854 | 0.00 | 0.00 | 855 | 0.00 | 0.00 | 856 | 0.00 | 0.00 | 857 | 0.00 | 0.00 |
| 858 | 0.00 | 0.00 | 859 | 0.00 | 0.00 | 860 | 0.00 | 0.00 | 861 | 0.00 | 0.00 | 862 | 0.00 | 0.00 |
| 863 | 0.00 | 0.00 | 864 | 0.00 | 0.00 | 865 | 0.00 | 0.00 | 866 | 0.00 | 0.00 | 867 | 0.00 | 0.00 |
| 868 | 0.00 | 0.00 | 869 | 0.00 | 0.00 | 870 | 0.00 | 0.00 | 871 | 0.00 | 0.00 | 872 | 0.00 | 0.00 |
| 874 | 0.00 | 0.00 | 875 | 0.00 | 0.00 | 876 | 0.00 | 0.00 | 877 | 0.00 | 0.00 | 878 | 0.00 | 0.00 |

ANUAL 06/07 * SETEMBRO 2006 PESADA S/SE 19H N/NE 19H * ANAT0 - FSE - C13
RELATORIO DE ERROS DE POTENCIA

| BARRA NUM. | ERRO DE POTENCIA MW | Mvar | BARRA NUM. | ERRO DE POTENCIA MW | Mvar | BARRA NUM. | ERRO DE POTENCIA MW | Mvar | BARRA NUM. | ERRO DE POTENCIA MW | Mvar | BARRA NUM. | ERRO DE POTENCIA MW | Mvar |
|---|---|---|---|---|---|---|---|---|---|---|---|---|---|---|
| 879 | 0.00 | 0.00 | 880 | 0.00 | 0.00 | 881 | 0.00 | 0.00 | 882 | 0.00 | 0.00 | 883 | 0.00 | 0.00 |
| 884 | 0.00 | 0.00 | 885 | 0.00 | 0.00 | 886 | 0.00 | 0.00 | 887 | 0.00 | 0.00 | 888 | 0.00 | 0.00 |
| 889 | 0.00 | 0.00 | 890 | 0.00 | 0.00 | 891 | 0.00 | 0.00 | 892 | 0.00 | 0.00 | 893 | 0.00 | 0.00 |
| 894 | 0.00 | 0.00 | 895 | 0.00 | 0.00 | 896 | 0.00 | 0.00 | 897 | 0.00 | 0.00 | 898 | 0.00 | 0.00 |
| 899 | 0.00 | 0.00 | 900 | 0.00 | 0.00 | 901 | 0.00 | 0.00 | 902 | 0.00 | 0.00 | 904 | 0.00 | 0.00 |
| 905 | 0.00 | 0.00 | 907 | 0.00 | 0.00 | 909 | 0.00 | 0.00 | 911 | 0.00 | 0.00 | 913 | 0.00 | 0.00 |
| 915 | 0.00 | 0.00 | 916 | 0.00 | 0.00 | 917 | 0.00 | 0.00 | 918 | 0.00 | 0.00 | 919 | 0.00 | 0.00 |
| 920 | 0.00 | 0.00 | 921 | 0.00 | 0.00 | 922 | 0.00 | 0.00 | 923 | 0.00 | 0.00 | 924 | 0.00 | 0.00 |
| 925 | 0.00 | 0.00 | 926 | 0.00 | 0.00 | 927 | 0.00 | 0.00 | 928 | 0.00 | 0.00 | 929 | 0.00 | 0.00 |
| 930 | 0.00 | 0.00 | 933 | 0.00 | 0.00 | 934 | 0.00 | 0.00 | 936 | 0.00 | 0.00 | 938 | 0.00 | 0.00 |
| 939 | 0.00 | 0.00 | 940 | 0.00 | 0.00 | 942 | 0.00 | 0.00 | 943 | 0.00 | 0.00 | 944 | 0.00 | 0.00 |
| 945 | 0.00 | 0.00 | 947 | 0.00 | 0.00 | 948 | 0.00 | 0.00 | 951 | 0.00 | 0.00 | 953 | 0.00 | 0.00 |
| 954 | 0.00 | 0.00 | 955 | 0.00 | 0.00 | 956 | 0.00 | 0.00 | 957 | 0.00 | 0.00 | 958 | 0.00 | 0.00 |
| 959 | 0.00 | 0.00 | 960 | 0.00 | 0.00 | 962 | 0.00 | 0.00 | 963 | 0.00 | 0.00 | 964 | 0.00 | 0.00 |
| 965 | 0.00 | 0.00 | 967 | 0.00 | 0.00 | 968 | 0.00 | 0.00 | 970 | 0.00 | 0.00 | 971 | 0.00 | 0.00 |
| 972 | 0.00 | 0.00 | 973 | 0.00 | 0.00 | 976 | 0.00 | 0.00 | 978 | 0.00 | 0.00 | 979 | 0.00 | 0.00 |
| 980 | 0.00 | 0.00 | 985 | 0.00 | 0.00 | 986 | 0.00 | 0.00 | 987 | 0.00 | 0.00 | 988 | 0.00 | 0.00 |
| 989 | 0.00 | 0.00 | 990 | 0.00 | 0.00 | 991 | 0.00 | 0.00 | 992 | 0.00 | 0.00 | 995 | 0.00 | 0.00 |
| 996 | 0.00 | 0.00 | 999 | 0.00 | 0.00 | 1006 | 0.00 | 0.00 | 1007 | 0.00 | 0.00 | 1008 | 0.00 | 0.00 |
| 1010 | 0.00 | 0.00 | 1011 | 0.00 | 0.00 | 1015 | 0.00 | 0.00 | 1016 | 0.00 | 0.00 | 1017 | 0.00 | 0.00 |
| 1027 | 0.00 | 0.00 | 1028 | 0.00 | 0.00 | 1029 | 0.00 | 0.00 | 1030 | 0.00 | 0.00 | 1031 | 0.00 | 0.00 |
| 1032 | 0.00 | 0.00 | 1034 | 0.00 | 0.00 | 1035 | 0.00 | 0.00 | 1040 | 0.00 | 0.00 | 1041 | 0.00 | 0.00 |
| 1042 | 0.00 | 0.00 | 1043 | 0.00 | 0.00 | 1044 | 0.00 | 0.00 | 1045 | 0.00 | 0.00 | 1046 | 0.00 | 0.00 |
| 1047 | 0.00 | 0.00 | 1048 | 0.00 | 0.00 | 1057 | 0.00 | 0.00 | 1058 | 0.00 | 0.00 | 1060 | 0.00 | 0.00 |
| 1061 | 0.00 | 0.00 | 1067 | 0.00 | 0.00 | 1068 | 0.00 | 0.00 | 1069 | 0.00 | 0.00 | 1078 | 0.00 | 0.00 |
| 1079 | 0.00 | 0.00 | 1082 | 0.00 | 0.00 | 1086 | 0.00 | 0.00 | 1091 | 0.00 | 0.00 | 1093 | 0.00 | 0.00 |
| 1096 | 0.00 | 0.00 | 1098 | 0.00 | 0.00 | 1100 | 0.00 | 0.00 | 1101 | 0.00 | 0.00 | 1103 | 0.00 | 0.00 |
| 1106 | 0.00 | 0.00 | 1107 | 0.05 | 0.00 | 1110 | 0.00 | 0.00 | 1125 | 0.00 | 0.00 | 1126 | 0.00 | 0.00 |
| 1127 | 0.00 | 0.00 | 1128 | 0.00 | 0.00 | 1129 | 0.00 | 0.00 | 1130 | 0.00 | 0.00 | 1131 | 0.00 | 0.00 |
| 1132 | 0.00 | 0.00 | 1133 | 0.00 | 0.00 | 1134 | 0.00 | 0.00 | 1135 | 0.00 | 0.00 | 1136 | 0.00 | 0.00 |
| 1137 | 0.00 | 0.00 | 1138 | 0.00 | 0.00 | 1139 | 0.00 | 0.00 | 1140 | 0.00 | 0.00 | 1141 | 0.00 | 0.00 |
| 1142 | 0.00 | 0.00 | 1143 | 0.00 | 0.00 | 1144 | 0.00 | 0.00 | 1145 | 0.00 | 0.00 | 1146 | 0.00 | 0.00 |
| 1147 | 0.00 | 0.00 | 1148 | 0.00 | 0.00 | 1149 | 0.00 | 0.00 | 1150 | 0.00 | 0.00 | 1152 | 0.00 | 0.00 |
| 1155 | 0.00 | 0.00 | 1156 | 0.00 | 0.00 | 1157 | 0.00 | 0.00 | 1159 | 0.00 | 0.00 | 1161 | 0.00 | 0.00 |
| 1162 | 0.00 | 0.00 | 1163 | 0.00 | 0.00 | 1164 | 0.00 | 0.00 | 1165 | 0.00 | 0.00 | 1170 | 0.00 | 0.00 |
| 1172 | 0.00 | 0.00 | 1175 | 0.00 | 0.00 | 1176 | 0.00 | 0.00 | 1177 | 0.00 | 0.00 | 1179 | 0.00 | 0.00 |
| 1180 | 0.00 | 0.00 | 1181 | 0.00 | 0.00 | 1182 | 0.00 | 0.00 | 1184 | 0.00 | 0.00 | 1185 | 0.00 | 0.00 |
| 1186 | 0.00 | 0.00 | 1187 | 0.00 | 0.00 | 1188 | 0.00 | 0.00 | 1189 | 0.00 | 0.00 | 1190 | 0.00 | 0.00 |
| 1191 | 0.00 | 0.00 | 1192 | 0.00 | 0.00 | 1193 | 0.00 | 0.00 | 1194 | 0.00 | 0.00 | 1195 | 0.00 | 0.00 |
| 1196 | 0.00 | 0.00 | 1197 | 0.00 | 0.00 | 1198 | 0.00 | 0.00 | 1199 | 0.00 | 0.00 | 1200 | 0.00 | 0.00 |
| 1201 | 0.00 | 0.00 | 1202 | 0.00 | 0.00 | 1203 | 0.00 | 0.00 | 1204 | 0.00 | 0.00 | 1205 | 0.00 | 0.00 |
| 1206 | 0.00 | 0.00 | 1207 | 0.00 | 0.00 | 1208 | 0.00 | 0.00 | 1209 | 0.00 | 0.00 | 1210 | 0.00 | 0.00 |
| 1211 | 0.00 | 0.00 | 1212 | 0.00 | 0.00 | 1213 | 0.00 | 0.00 | 1214 | 0.00 | 0.00 | 1215 | 0.00 | 0.00 |
| 1216 | 0.00 | 0.00 | 1217 | 0.00 | 0.00 | 1218 | 0.00 | 0.00 | 1219 | 0.00 | 0.00 | 1220 | 0.00 | 0.00 |
| 1221 | 0.00 | 0.00 | 1222 | 0.00 | 0.00 | 1223 | 0.00 | 0.00 | 1224 | 0.00 | 0.00 | 1225 | 0.00 | 0.00 |
| 1226 | 0.00 | 0.00 | 1227 | 0.00 | 0.00 | 1228 | 0.00 | 0.00 | 1229 | 0.00 | 0.00 | 1230 | 0.00 | 0.00 |
| 1231 | 0.00 | 0.00 | 1232 | 0.00 | 0.00 | 1233 | 0.00 | 0.00 | 1234 | 0.00 | 0.00 | 1235 | 0.00 | 0.00 |
| 1236 | 0.00 | 0.00 | 1237 | 0.00 | 0.00 | 1238 | 0.00 | 0.00 | 1239 | 0.00 | 0.00 | 1240 | 0.00 | 0.00 |
| 1241 | 0.00 | 0.00 | 1242 | 0.00 | 0.00 | 1243 | 0.00 | 0.00 | 1244 | 0.00 | 0.00 | 1245 | 0.00 | 0.00 |
| 1246 | 0.00 | 0.00 | 1247 | 0.00 | 0.00 | 1248 | 0.00 | 0.00 | 1249 | 0.00 | 0.00 | 1250 | 0.00 | 0.00 |

ANUAL 06/07 * SETEMBRO 2006 PESADA S/SE 19H N/NE 19H * ANAT0 - FSE - C13
RELATORIO DE ERROS DE POTENCIA

| BARRA NUM. | ERRO DE POTENCIA MW | Mvar | BARRA NUM. | ERRO DE POTENCIA MW | Mvar | BARRA NUM. | ERRO DE POTENCIA MW | Mvar | BARRA NUM. | ERRO DE POTENCIA MW | Mvar | BARRA NUM. | ERRO DE POTENCIA MW | Mvar |
|---|---|---|---|---|---|---|---|---|---|---|---|---|---|---|
| 1251 | 0.00 | 0.00 | 1252 | 0.00 | 0.00 | 1253 | 0.00 | 0.00 | 1254 | 0.00 | 0.00 | 1255 | 0.00 | 0.00 |
| 1256 | 0.00 | 0.00 | 1257 | 0.00 | 0.00 | 1258 | 0.00 | 0.00 | 1259 | 0.00 | 0.00 | 1260 | 0.00 | 0.00 |
| 1261 | 0.00 | 0.00 | 1262 | 0.00 | 0.00 | 1263 | 0.00 | 0.00 | 1264 | 0.00 | 0.00 | 1265 | 0.00 | 0.00 |
| 1266 | 0.00 | 0.00 | 1267 | 0.00 | 0.00 | 1268 | 0.00 | 0.00 | 1269 | 0.00 | 0.00 | 1270 | 0.00 | 0.00 |
| 1271 | 0.00 | 0.00 | 1272 | 0.00 | 0.00 | 1273 | 0.00 | 0.00 | 1274 | 0.00 | 0.00 | 1275 | 0.00 | 0.00 |
| 1276 | 0.00 | 0.00 | 1277 | 0.00 | 0.00 | 1278 | 0.00 | 0.00 | 1279 | 0.00 | 0.00 | 1280 | 0.00 | 0.00 |
| 1281 | 0.00 | 0.00 | 1282 | 0.00 | 0.00 | 1283 | 0.00 | 0.00 | 1284 | 0.00 | 0.00 | 1285 | 0.00 | 0.00 |
| 1286 | 0.00 | 0.00 | 1287 | 0.00 | 0.00 | 1288 | 0.00 | 0.00 | 1289 | 0.00 | 0.00 | 1290 | 0.00 | 0.00 |
| 1291 | 0.00 | 0.00 | 1292 | 0.00 | 0.00 | 1294 | 0.00 | 0.00 | 1295 | 0.00 | 0.00 | 1296 | 0.00 | 0.00 |
| 1297 | 0.00 | 0.00 | 1298 | 0.00 | 0.00 | 1299 | 0.00 | 0.00 | 1300 | 0.00 | 0.00 | 1301 | 0.00 | 0.00 |
| 1302 | 0.00 | 0.00 | 1303 | 0.00 | 0.00 | 1304 | 0.00 | 0.00 | 1305 | 0.00 | 0.00 | 1306 | 0.00 | 0.00 |
| 1307 | 0.00 | 0.00 | 1310 | 0.00 | 0.00 | 1311 | 0.00 | 0.00 | 1312 | 0.00 | 0.00 | 1315 | 0.00 | 0.00 |
| 1318 | 0.00 | 0.00 | 1319 | 0.00 | 0.00 | 1322 | 0.00 | 0.00 | 1323 | 0.00 | 0.00 | 1324 | 0.00 | 0.00 |
| 1325 | 0.00 | 0.00 | 1326 | 0.00 | 0.00 | 1327 | 0.00 | 0.00 | 1328 | 0.00 | 0.00 | 1329 | 0.00 | 0.00 |
| 1332 | 0.00 | 0.00 | 1334 | 0.00 | 0.00 | 1335 | 0.00 | 0.00 | 1336 | 0.00 | 0.00 | 1337 | 0.00 | 0.00 |
| 1339 | 0.00 | 0.00 | 1340 | 0.00 | 0.00 | 1341 | 0.00 | 0.00 | 1350 | 0.00 | 0.00 | 1352 | 0.00 | 0.00 |
| 1361 | 0.00 | 0.00 | 1380 | 0.00 | 0.00 | 1390 | 0.00 | 0.00 | 1500 | 0.00 | 0.00 | 1501 | 0.00 | 0.00 |
| 1502 | 0.00 | 0.00 | 1503 | 0.00 | 0.00 | 1504 | 0.00 | 0.00 | 1505 | 0.00 | 0.00 | 1506 | 0.00 | 0.00 |
| 1507 | 0.00 | 0.00 | 1508 | 0.00 | 0.00 | 1509 | 0.00 | 0.00 | 1510 | 0.00 | 0.00 | 1511 | 0.00 | 0.00 |
| 1512 | 0.00 | 0.00 | 1514 | 0.00 | 0.00 | 1515 | 0.00 | 0.00 | 1516 | 0.00 | 0.00 | 1517 | 0.00 | 0.00 |
| 1518 | 0.00 | 0.00 | 1519 | 0.00 | 0.00 | 1520 | 0.00 | 0.00 | 1521 | 0.00 | 0.00 | 1522 | 0.00 | 0.00 |
| 1523 | 0.00 | 0.00 | 1524 | 0.00 | 0.00 | 1525 | 0.00 | 0.00 | 1526 | 0.00 | 0.00 | 1527 | 0.00 | 0.00 |
| 1528 | 0.00 | 0.00 | 1529 | 0.00 | 0.00 | 1530 | 0.00 | 0.00 | 1531 | 0.00 | 0.00 | 1532 | 0.00 | 0.00 |
| 1533 | 0.00 | 0.00 | 1534 | 0.00 | 0.00 | 1535 | 0.00 | 0.00 | 1536 | 0.00 | 0.00 | 1537 | 0.00 | 0.00 |
| 1538 | 0.00 | 0.00 | 1539 | 0.00 | 0.00 | 1540 | 0.00 | 0.00 | 1541 | 0.00 | 0.00 | 1542 | 0.00 | 0.00 |
| 1543 | 0.00 | 0.00 | 1544 | 0.00 | 0.00 | 1545 | 0.00 | 0.00 | 1546 | 0.00 | 0.00 | 1548 | 0.00 | 0.00 |
| 1549 | 0.00 | 0.00 | 1550 | 0.00 | 0.00 | 1551 | 0.00 | 0.00 | 1552 | 0.00 | 0.00 | 1553 | 0.00 | 0.00 |
| 1554 | 0.00 | 0.00 | 1555 | 0.00 | 0.00 | 1556 | 0.00 | 0.00 | 1557 | 0.00 | 0.00 | 1558 | 0.00 | 0.00 |
| 1559 | 0.00 | 0.00 | 1560 | 0.00 | 0.00 | 1561 | 0.00 | 0.00 | 1562 | 0.00 | 0.00 | 1563 | 0.00 | 0.00 |
| 1564 | 0.00 | 0.00 | 1565 | 0.00 | 0.00 | 1566 | 0.00 | 0.00 | 1567 | 0.00 | 0.00 | 1568 | 0.00 | 0.00 |
| 1569 | 0.00 | 0.00 | 1570 | 0.00 | 0.00 | 1571 | 0.00 | 0.00 | 1572 | 0.00 | 0.00 | 1573 | 0.00 | 0.00 |
| 1574 | 0.00 | 0.00 | 1575 | 0.00 | 0.00 | 1576 | 0.00 | 0.00 | 1578 | 0.00 | 0.00 | 1579 | 0.00 | 0.00 |
| 1580 | 0.00 | 0.00 | 1581 | 0.00 | 0.00 | 1582 | 0.00 | 0.00 | 1583 | 0.00 | 0.00 | 1584 | 0.00 | 0.00 |
| 1585 | 0.00 | 0.00 | 1586 | 0.00 | 0.00 | 1587 | 0.00 | 0.00 | 1588 | 0.00 | 0.00 | 1589 | 0.00 | 0.00 |
| 1590 | 0.00 | 0.00 | 1591 | 0.00 | 0.00 | 1592 | 0.00 | 0.00 | 1593 | 0.00 | 0.00 | 1594 | 0.00 | 0.00 |
| 1595 | 0.00 | 0.00 | 1596 | 0.00 | 0.00 | 1597 | 0.00 | 0.00 | 1598 | 0.00 | 0.00 | 1599 | 0.00 | 0.00 |
| 1600 | 0.00 | 0.00 | 1601 | 0.00 | 0.00 | 1602 | 0.00 | 0.00 | 1603 | 0.00 | 0.00 | 1604 | 0.00 | 0.00 |
| 1605 | 0.00 | 0.00 | 1606 | 0.00 | 0.00 | 1607 | 0.00 | 0.00 | 1608 | 0.00 | 0.00 | 1609 | 0.00 | 0.00 |
| 1610 | 0.00 | 0.00 | 1611 | 0.00 | 0.00 | 1612 | 0.00 | 0.00 | 1613 | 0.00 | 0.00 | 1614 | 0.00 | 0.00 |
| 1615 | 0.00 | 0.00 | 1616 | 0.00 | 0.00 | 1617 | 0.00 | 0.00 | 1618 | 0.00 | 0.00 | 1619 | 0.00 | 0.00 |
| 1620 | 0.00 | 0.00 | 1621 | 0.00 | 0.00 | 1622 | 0.00 | 0.00 | 1623 | 0.00 | 0.00 | 1624 | 0.00 | 0.00 |
| 1625 | 0.00 | 0.00 | 1626 | 0.00 | 0.00 | 1627 | 0.00 | 0.00 | 1628 | 0.00 | 0.00 | 1629 | 0.00 | 0.00 |
| 1630 | 0.00 | 0.00 | 1631 | 0.00 | 0.00 | 1632 | 0.00 | 0.00 | 1633 | 0.00 | 0.00 | 1634 | 0.00 | 0.00 |
| 1635 | 0.00 | 0.00 | 1636 | 0.00 | 0.00 | 1637 | 0.00 | 0.00 | 1638 | 0.00 | 0.00 | 1639 | 0.00 | 0.00 |
| 1640 | 0.00 | 0.00 | 1641 | 0.00 | 0.00 | 1642 | 0.00 | 0.00 | 1643 | 0.00 | 0.00 | 1644 | 0.00 | 0.00 |
| 1645 | 0.00 | 0.00 | 1646 | 0.00 | 0.00 | 1647 | 0.00 | 0.00 | 1648 | 0.00 | 0.00 | 1649 | 0.00 | 0.00 |
| 1650 | 0.00 | 0.00 | 1651 | 0.00 | 0.00 | 1652 | 0.00 | 0.00 | 1653 | 0.00 | 0.00 | 1654 | 0.00 | 0.00 |
| 1655 | 0.00 | 0.00 | 1656 | 0.00 | 0.00 | 1657 | 0.00 | 0.00 | 1658 | 0.00 | 0.00 | 1659 | 0.00 | 0.00 |
| 1660 | 0.00 | 0.00 | 1661 | 0.00 | 0.00 | 1662 | 0.00 | 0.00 | 1663 | 0.00 | 0.00 | 1664 | 0.00 | 0.00 |
| 1665 | 0.00 | 0.00 | 1666 | 0.00 | 0.00 | 1667 | 0.00 | 0.00 | 1668 | 0.00 | 0.00 | 1669 | 0.00 | 0.00 |

ANUAL 06/07 * SETEMBRO 2006 PESADA S/SE 19H N/NE 19H * ANAT0 - FSE - C13
RELATORIO DE ERROS DE POTENCIA

| BARRA NUM. | ERRO DE POTENCIA MW | Mvar | BARRA NUM. | ERRO DE POTENCIA MW | Mvar | BARRA NUM. | ERRO DE POTENCIA MW | Mvar | BARRA NUM. | ERRO DE POTENCIA MW | Mvar | BARRA NUM. | ERRO DE POTENCIA MW | Mvar |
|---|---|---|---|---|---|---|---|---|---|---|---|---|---|---|
| 1670 | 0.00 | 0.00 | 1671 | 0.00 | 0.00 | 1672 | 0.00 | 0.00 | 1673 | 0.00 | 0.00 | 1674 | 0.00 | 0.00 |
| 1675 | 0.00 | 0.00 | 1676 | 0.00 | 0.00 | 1677 | 0.00 | 0.00 | 1678 | 0.00 | 0.00 | 1679 | 0.00 | 0.00 |
| 1680 | 0.00 | 0.00 | 1681 | 0.00 | 0.00 | 1682 | 0.00 | 0.00 | 1683 | 0.00 | 0.00 | 1684 | 0.00 | 0.00 |
| 1685 | 0.00 | 0.00 | 1686 | 0.00 | 0.00 | 1687 | 0.00 | 0.00 | 1688 | 0.00 | 0.00 | 1689 | 0.00 | 0.00 |
| 1690 | 0.00 | 0.00 | 1691 | 0.00 | 0.00 | 1692 | 0.00 | 0.00 | 1693 | 0.00 | 0.00 | 1694 | 0.00 | 0.00 |
| 1695 | 0.00 | 0.00 | 1696 | 0.00 | 0.00 | 1697 | 0.00 | 0.00 | 1699 | 0.00 | 0.00 | 1700 | 0.00 | 0.00 |
| 1701 | 0.00 | 0.00 | 1702 | 0.00 | 0.00 | 1703 | 0.00 | 0.00 | 1704 | 0.00 | 0.00 | 1707 | 0.00 | 0.00 |
| 1708 | 0.00 | 0.00 | 1709 | 0.00 | 0.00 | 1712 | 0.00 | 0.00 | 1713 | 0.00 | 0.00 | 1715 | 0.00 | 0.00 |
| 1717 | 0.00 | 0.00 | 1718 | 0.00 | 0.00 | 1719 | 0.00 | 0.00 | 1720 | 0.00 | 0.00 | 1721 | 0.00 | 0.00 |
| 1723 | 0.00 | 0.00 | 1724 | 0.00 | 0.00 | 1725 | 0.00 | 0.00 | 1726 | 0.00 | 0.00 | 1727 | 0.00 | 0.00 |
| 1728 | 0.00 | 0.00 | 1730 | 0.00 | 0.00 | 1731 | 0.00 | 0.00 | 1732 | 0.00 | 0.00 | 1733 | 0.00 | 0.00 |
| 1734 | 0.00 | 0.00 | 1735 | 0.00 | 0.00 | 1736 | 0.00 | 0.00 | 1737 | 0.00 | 0.00 | 1738 | 0.00 | 0.00 |
| 1739 | 0.00 | 0.00 | 1740 | 0.00 | 0.00 | 1741 | 0.00 | 0.00 | 1742 | 0.00 | 0.00 | 1743 | 0.00 | 0.00 |
| 1744 | 0.00 | 0.00 | 1745 | 0.00 | 0.00 | 1746 | 0.00 | 0.00 | 1747 | 0.00 | 0.00 | 1748 | 0.00 | 0.00 |
| 1749 | 0.00 | 0.00 | 1750 | 0.00 | 0.00 | 1751 | 0.00 | 0.00 | 1752 | 0.00 | 0.00 | 1753 | 0.00 | 0.00 |
| 1754 | 0.00 | 0.00 | 1755 | 0.00 | 0.00 | 1756 | 0.00 | 0.00 | 1757 | 0.00 | 0.00 | 1758 | 0.00 | 0.00 |
| 1759 | 0.00 | 0.00 | 1760 | 0.00 | 0.00 | 1761 | 0.00 | 0.00 | 1762 | 0.00 | 0.00 | 1763 | 0.00 | 0.00 |
| 1765 | 0.00 | 0.00 | 1766 | 0.00 | 0.00 | 1770 | 0.00 | 0.00 | 1771 | 0.00 | 0.00 | 1772 | 0.00 | 0.00 |
| 1773 | 0.00 | 0.00 | 1780 | 0.00 | 0.00 | 1800 | 0.00 | 0.00 | 1801 | 0.00 | 0.00 | 1802 | 0.00 | 0.00 |
| 1803 | 0.00 | 0.00 | 1804 | 0.00 | 0.00 | 1805 | 0.00 | 0.00 | 1806 | 0.00 | 0.00 | 1807 | 0.00 | 0.00 |
| 1808 | 0.00 | 0.00 | 1809 | 0.00 | 0.00 | 1810 | 0.00 | 0.00 | 1811 | 0.00 | 0.00 | 1812 | 0.00 | 0.00 |
| 1813 | 0.00 | 0.00 | 1814 | 0.00 | 0.00 | 1815 | 0.00 | 0.00 | 1816 | 0.00 | 0.00 | 1818 | 0.00 | 0.00 |
| 1820 | 0.00 | 0.00 | 1821 | 0.00 | 0.00 | 1822 | 0.00 | 0.00 | 1825 | 0.00 | 0.00 | 1826 | 0.00 | 0.00 |
| 1827 | 0.00 | 0.00 | 1828 | 0.00 | 0.00 | 1829 | 0.00 | 0.00 | 1830 | 0.00 | 0.00 | 1831 | 0.00 | 0.00 |
| 1832 | 0.00 | 0.00 | 1833 | 0.00 | 0.00 | 1835 | 0.00 | 0.00 | 1836 | 0.00 | 0.00 | 1837 | 0.00 | 0.00 |
| 1838 | 0.00 | 0.00 | 1839 | 0.00 | 0.00 | 1840 | 0.00 | 0.00 | 1841 | 0.00 | 0.00 | 1842 | 0.00 | 0.00 |
| 1844 | 0.00 | 0.00 | 1845 | 0.00 | 0.00 | 1846 | 0.00 | 0.00 | 1847 | 0.00 | 0.00 | 1848 | 0.00 | 0.00 |
| 1850 | 0.00 | 0.00 | 1851 | 0.00 | 0.00 | 1853 | 0.00 | 0.00 | 1854 | 0.00 | 0.00 | 1855 | 0.00 | 0.00 |
| 1856 | 0.00 | 0.00 | 1857 | 0.00 | 0.00 | 1858 | 0.00 | 0.00 | 1859 | 0.00 | 0.00 | 1860 | 0.00 | 0.00 |
| 1861 | 0.00 | 0.00 | 1880 | 0.00 | 0.00 | 1881 | 0.00 | 0.00 | 1882 | 0.00 | 0.00 | 1883 | 0.00 | 0.00 |
| 1884 | 0.00 | 0.00 | 1886 | 0.00 | 0.00 | 1887 | 0.00 | 0.00 | 1890 | 0.00 | 0.00 | 1891 | 0.00 | 0.00 |
| 1892 | 0.00 | 0.00 | 1893 | 0.00 | 0.00 | 1895 | 0.00 | 0.00 | 1900 | 0.00 | 0.00 | 1901 | 0.00 | 0.00 |
| 1902 | 0.00 | 0.00 | 1903 | 0.00 | 0.00 | 1904 | 0.00 | 0.00 | 1906 | 0.00 | 0.00 | 1907 | 0.00 | 0.00 |
| 1908 | 0.00 | 0.00 | 1909 | 0.00 | 0.00 | 1910 | 0.00 | 0.00 | 1911 | 0.00 | 0.00 | 1912 | 0.00 | 0.00 |
| 1913 | 0.00 | 0.00 | 1914 | 0.00 | 0.00 | 1917 | 0.00 | 0.00 | 1918 | 0.00 | 0.00 | 1919 | 0.00 | 0.00 |
| 1920 | 0.00 | 0.00 | 1921 | 0.00 | 0.00 | 1922 | 0.00 | 0.00 | 1924 | 0.00 | 0.00 | 1926 | 0.00 | 0.00 |
| 1927 | 0.00 | 0.00 | 1928 | 0.00 | 0.00 | 1929 | 0.00 | 0.00 | 1930 | 0.00 | 0.00 | 1931 | 0.00 | 0.00 |
| 1932 | 0.00 | 0.00 | 1933 | 0.00 | 0.00 | 1934 | 0.00 | 0.00 | 1936 | 0.00 | 0.00 | 1937 | 0.00 | 0.00 |
| 1939 | 0.00 | 0.00 | 1941 | 0.00 | 0.00 | 1947 | 0.00 | 0.00 | 1948 | 0.00 | 0.00 | 1949 | 0.00 | 0.00 |
| 1950 | 0.00 | 0.00 | 1954 | 0.00 | 0.00 | 1955 | 0.00 | 0.00 | 1957 | 0.00 | 0.00 | 1958 | 0.00 | 0.00 |
| 1959 | 0.00 | 0.00 | 1960 | 0.00 | 0.00 | 1961 | 0.00 | 0.00 | 1962 | 0.00 | 0.00 | 1963 | 0.00 | 0.00 |
| 1968 | 0.00 | 0.00 | 1972 | 0.00 | 0.00 | 1973 | 0.00 | 0.00 | 1974 | 0.00 | 0.00 | 1976 | 0.00 | 0.00 |
| 1977 | 0.00 | 0.00 | 1978 | 0.00 | 0.00 | 1981 | 0.00 | 0.00 | 1982 | 0.00 | 0.00 | 1985 | 0.00 | 0.00 |
| 1986 | 0.00 | 0.00 | 1989 | 0.00 | 0.00 | 1990 | 0.00 | 0.00 | 1996 | 0.00 | 0.00 | 1997 | 0.00 | 0.00 |
| 1998 | 0.00 | 0.00 | 1999 | 0.00 | 0.00 | 2000 | 0.00 | 0.00 | 2001 | 0.00 | 0.00 | 2002 | 0.00 | 0.00 |
| 2003 | 0.00 | 0.00 | 2004 | 0.00 | 0.00 | 2006 | 0.00 | 0.00 | 2007 | 0.00 | 0.00 | 2008 | 0.00 | 0.00 |
| 2010 | 0.00 | 0.00 | 2011 | 0.00 | 0.00 | 2012 | 0.00 | 0.00 | 2013 | 0.00 | 0.00 | 2014 | 0.00 | 0.00 |
| 2015 | 0.00 | 0.00 | 2016 | 0.00 | 0.00 | 2017 | 0.00 | 0.00 | 2018 | 0.00 | 0.00 | 2019 | 0.00 | 0.00 |
| 2021 | 0.00 | 0.00 | 2022 | 0.00 | 0.00 | 2023 | 0.00 | 0.00 | 2024 | 0.00 | 0.00 | 2025 | 0.00 | 0.00 |
| 2026 | 0.00 | 0.00 | 2028 | 0.00 | 0.00 | 2029 | 0.00 | 0.00 | 2030 | 0.00 | 0.00 | 2032 | 0.00 | 0.00 |

ANUAL 06/07 * SETEMBRO 2006 PESADA S/SE 19H N/NE 19H * ANAT0 - FSE - C13
RELATORIO DE ERROS DE POTENCIA

| BARRA NUM. | ERRO DE POTENCIA MW | Mvar | BARRA NUM. | ERRO DE POTENCIA MW | Mvar | BARRA NUM. | ERRO DE POTENCIA MW | Mvar | BARRA NUM. | ERRO DE POTENCIA MW | Mvar | BARRA NUM. | ERRO DE POTENCIA MW | Mvar |
|---|---|---|---|---|---|---|---|---|---|---|---|---|---|---|
| 2033 | 0.00 | 0.00 | 2036 | 0.00 | 0.00 | 2038 | 0.00 | 0.00 | 2039 | 0.00 | 0.00 | 2040 | 0.00 | 0.00 |
| 2041 | 0.00 | 0.00 | 2042 | 0.00 | 0.00 | 2043 | 0.00 | 0.00 | 2044 | 0.00 | 0.00 | 2045 | 0.00 | 0.00 |
| 2047 | 0.00 | 0.00 | 2049 | 0.00 | 0.00 | 2050 | 0.00 | 0.00 | 2051 | 0.00 | 0.00 | 2052 | 0.00 | 0.00 |
| 2053 | 0.00 | 0.00 | 2054 | 0.00 | 0.00 | 2055 | 0.00 | 0.00 | 2056 | 0.00 | 0.00 | 2057 | 0.00 | 0.00 |
| 2058 | 0.00 | 0.00 | 2059 | 0.00 | 0.00 | 2060 | 0.00 | 0.00 | 2061 | 0.00 | 0.00 | 2062 | 0.00 | 0.00 |
| 2063 | 0.00 | 0.00 | 2064 | 0.00 | 0.00 | 2065 | 0.00 | 0.00 | 2066 | 0.00 | 0.00 | 2067 | 0.00 | 0.00 |
| 2068 | 0.00 | 0.00 | 2069 | 0.00 | 0.00 | 2070 | 0.00 | 0.00 | 2071 | 0.00 | 0.00 | 2072 | 0.00 | 0.00 |
| 2073 | 0.00 | 0.00 | 2074 | 0.00 | 0.00 | 2075 | 0.00 | 0.00 | 2076 | 0.00 | 0.00 | 2077 | 0.00 | 0.00 |
| 2078 | 0.00 | 0.00 | 2079 | 0.00 | 0.00 | 2081 | 0.00 | 0.00 | 2082 | 0.00 | 0.00 | 2083 | 0.00 | 0.00 |
| 2084 | 0.00 | 0.00 | 2085 | 0.00 | 0.00 | 2086 | 0.00 | 0.00 | 2087 | 0.00 | 0.00 | 2088 | 0.00 | 0.00 |
| 2089 | 0.00 | 0.00 | 2090 | 0.00 | 0.00 | 2091 | 0.00 | 0.00 | 2092 | 0.00 | 0.00 | 2093 | 0.00 | 0.00 |
| 2094 | 0.00 | 0.00 | 2095 | 0.00 | 0.00 | 2096 | 0.00 | 0.00 | 2097 | 0.00 | 0.00 | 2099 | 0.00 | 0.00 |
| 2100 | 0.00 | 0.00 | 2101 | 0.00 | 0.00 | 2102 | 0.00 | 0.00 | 2103 | 0.00 | 0.00 | 2104 | 0.00 | 0.00 |
| 2105 | 0.00 | 0.00 | 2106 | 0.00 | 0.00 | 2107 | 0.00 | 0.00 | 2108 | 0.00 | 0.00 | 2109 | 0.00 | 0.00 |
| 2110 | 0.00 | 0.00 | 2111 | 0.00 | 0.00 | 2112 | 0.00 | 0.00 | 2113 | 0.00 | 0.00 | 2114 | 0.00 | 0.00 |
| 2115 | 0.00 | 0.00 | 2116 | 0.00 | 0.00 | 2117 | 0.00 | 0.00 | 2118 | 0.00 | 0.00 | 2119 | 0.00 | 0.00 |
| 2120 | 0.00 | 0.00 | 2121 | 0.00 | 0.00 | 2122 | 0.00 | 0.00 | 2123 | 0.00 | 0.00 | 2124 | 0.00 | 0.00 |
| 2125 | 0.00 | 0.00 | 2126 | 0.00 | 0.00 | 2127 | 0.00 | 0.00 | 2128 | 0.00 | 0.00 | 2129 | 0.00 | 0.00 |
| 2130 | 0.00 | 0.00 | 2131 | 0.00 | 0.00 | 2132 | 0.00 | 0.00 | 2133 | 0.00 | 0.00 | 2134 | 0.00 | 0.00 |
| 2135 | 0.00 | 0.00 | 2136 | 0.00 | 0.00 | 2137 | 0.00 | 0.00 | 2138 | 0.00 | 0.00 | 2139 | 0.00 | 0.00 |
| 2140 | 0.00 | 0.00 | 2141 | 0.00 | 0.00 | 2142 | 0.00 | 0.00 | 2143 | 0.00 | 0.00 | 2144 | 0.00 | 0.00 |
| 2145 | 0.00 | 0.00 | 2146 | 0.00 | 0.00 | 2147 | 0.00 | 0.00 | 2148 | 0.00 | 0.00 | 2149 | 0.00 | 0.00 |
| 2150 | 0.00 | 0.00 | 2151 | 0.00 | 0.00 | 2153 | 0.00 | 0.00 | 2154 | 0.00 | 0.00 | 2155 | 0.00 | 0.00 |
| 2156 | 0.00 | 0.00 | 2157 | 0.00 | 0.00 | 2158 | 0.00 | 0.00 | 2159 | 0.00 | 0.00 | 2160 | 0.00 | 0.00 |
| 2161 | 0.00 | 0.00 | 2162 | 0.00 | 0.00 | 2163 | 0.00 | 0.00 | 2164 | 0.00 | 0.00 | 2165 | 0.00 | 0.00 |
| 2166 | 0.00 | 0.00 | 2167 | 0.00 | 0.00 | 2168 | 0.00 | 0.00 | 2169 | 0.00 | 0.00 | 2170 | 0.00 | 0.00 |
| 2171 | 0.00 | 0.00 | 2172 | 0.00 | 0.00 | 2173 | 0.00 | 0.00 | 2174 | 0.00 | 0.00 | 2175 | 0.00 | 0.00 |
| 2177 | 0.00 | 0.00 | 2178 | 0.00 | 0.00 | 2179 | 0.00 | 0.00 | 2180 | 0.00 | 0.00 | 2181 | 0.00 | 0.00 |
| 2182 | 0.00 | 0.00 | 2183 | 0.00 | 0.00 | 2184 | 0.00 | 0.00 | 2185 | 0.00 | 0.00 | 2186 | 0.00 | 0.00 |
| 2187 | 0.00 | 0.00 | 2188 | 0.00 | 0.00 | 2189 | 0.00 | 0.00 | 2190 | 0.00 | 0.00 | 2191 | 0.00 | 0.00 |
| 2192 | 0.00 | 0.00 | 2193 | 0.00 | 0.00 | 2194 | 0.00 | 0.00 | 2195 | 0.00 | 0.00 | 2196 | 0.00 | 0.00 |
| 2197 | 0.00 | 0.00 | 2198 | 0.00 | 0.00 | 2199 | 0.00 | 0.00 | 2200 | 0.00 | 0.00 | 2201 | 0.00 | 0.00 |
| 2202 | 0.00 | 0.00 | 2203 | 0.00 | 0.00 | 2204 | 0.00 | 0.00 | 2205 | 0.00 | 0.00 | 2206 | 0.00 | 0.00 |
| 2207 | 0.00 | 0.00 | 2208 | 0.00 | 0.00 | 2209 | 0.00 | 0.00 | 2210 | 0.00 | 0.00 | 2211 | 0.00 | 0.00 |
| 2212 | 0.00 | 0.00 | 2213 | 0.00 | 0.00 | 2214 | 0.00 | 0.00 | 2215 | 0.00 | 0.00 | 2216 | 0.00 | 0.00 |
| 2217 | 0.00 | 0.00 | 2218 | 0.00 | 0.00 | 2219 | 0.00 | 0.00 | 2220 | 0.00 | 0.00 | 2221 | 0.00 | 0.00 |
| 2222 | 0.00 | 0.00 | 2223 | 0.00 | 0.00 | 2224 | 0.00 | 0.00 | 2225 | 0.00 | 0.00 | 2226 | 0.00 | 0.00 |
| 2227 | 0.00 | 0.00 | 2228 | 0.00 | 0.00 | 2229 | 0.00 | 0.00 | 2230 | 0.00 | 0.00 | 2231 | 0.00 | 0.00 |
| 2232 | 0.00 | 0.00 | 2233 | 0.00 | 0.00 | 2234 | 0.00 | 0.00 | 2235 | 0.00 | 0.00 | 2236 | 0.00 | 0.00 |
| 2237 | 0.00 | 0.00 | 2238 | 0.00 | 0.00 | 2239 | 0.00 | 0.00 | 2240 | 0.00 | 0.00 | 2241 | 0.00 | 0.00 |
| 2242 | 0.00 | 0.00 | 2243 | 0.00 | 0.00 | 2244 | 0.00 | 0.00 | 2245 | 0.00 | 0.00 | 2246 | 0.00 | 0.00 |
| 2247 | 0.00 | 0.00 | 2248 | 0.00 | 0.00 | 2249 | 0.00 | 0.00 | 2250 | 0.00 | 0.00 | 2251 | 0.00 | 0.00 |
| 2252 | 0.00 | 0.00 | 2253 | 0.00 | 0.00 | 2254 | 0.00 | 0.00 | 2255 | 0.00 | 0.00 | 2256 | 0.00 | 0.00 |
| 2257 | 0.00 | 0.00 | 2258 | 0.00 | 0.00 | 2259 | 0.00 | 0.00 | 2260 | 0.00 | 0.00 | 2261 | 0.00 | 0.00 |
| 2262 | 0.00 | 0.00 | 2263 | 0.00 | 0.00 | 2264 | 0.00 | 0.00 | 2265 | 0.00 | 0.00 | 2266 | 0.00 | 0.00 |
| 2267 | 0.00 | 0.00 | 2268 | 0.00 | 0.00 | 2269 | 0.00 | 0.00 | 2270 | 0.00 | 0.00 | 2271 | 0.00 | 0.00 |
| 2272 | 0.00 | 0.00 | 2273 | 0.00 | 0.00 | 2274 | 0.00 | 0.00 | 2275 | 0.00 | 0.00 | 2276 | 0.00 | 0.00 |
| 2277 | 0.00 | 0.00 | 2278 | 0.00 | 0.00 | 2279 | 0.00 | 0.00 | 2280 | 0.00 | 0.00 | 2281 | 0.00 | 0.00 |
| 2282 | 0.00 | 0.00 | 2283 | 0.00 | 0.00 | 2284 | 0.00 | 0.00 | 2285 | 0.00 | 0.00 | 2286 | 0.00 | 0.00 |
| 2287 | 0.00 | 0.00 | 2288 | 0.00 | 0.00 | 2289 | 0.00 | 0.00 | 2290 | 0.00 | 0.00 | 2291 | 0.00 | 0.00 |

ANUAL 06/07 * SETEMBRO 2006 PESADA S/SE 19H N/NE 19H * ANAT0 - FSE - C13
RELATORIO DE ERROS DE POTENCIA

| BARRA NUM. | ERRO DE POTENCIA MW | Mvar | BARRA NUM. | ERRO DE POTENCIA MW | Mvar | BARRA NUM. | ERRO DE POTENCIA MW | Mvar | BARRA NUM. | ERRO DE POTENCIA MW | Mvar | BARRA NUM. | ERRO DE POTENCIA MW | Mvar |
|---|---|---|---|---|---|---|---|---|---|---|---|---|---|---|
| 2292 | 0.00 | 0.00 | 2293 | 0.00 | 0.00 | 2294 | 0.00 | 0.00 | 2295 | 0.00 | 0.00 | 2296 | 0.00 | 0.00 |
| 2297 | 0.00 | 0.00 | 2298 | 0.00 | 0.00 | 2299 | 0.00 | 0.00 | 2300 | 0.00 | 0.00 | 2301 | 0.00 | 0.00 |
| 2302 | 0.00 | 0.00 | 2303 | 0.00 | 0.00 | 2304 | 0.00 | 0.00 | 2305 | 0.00 | 0.00 | 2306 | 0.00 | 0.00 |
| 2307 | 0.00 | 0.00 | 2308 | 0.00 | 0.00 | 2309 | 0.00 | 0.00 | 2310 | 0.00 | 0.00 | 2311 | 0.00 | 0.00 |
| 2312 | 0.00 | 0.00 | 2313 | 0.00 | 0.00 | 2314 | 0.00 | 0.00 | 2315 | 0.00 | 0.00 | 2316 | 0.00 | 0.00 |
| 2317 | 0.00 | 0.00 | 2318 | 0.00 | 0.00 | 2319 | 0.00 | 0.00 | 2320 | 0.00 | 0.00 | 2321 | 0.00 | 0.00 |
| 2322 | 0.00 | 0.00 | 2323 | 0.00 | 0.00 | 2324 | 0.00 | 0.00 | 2325 | 0.00 | 0.00 | 2326 | 0.00 | 0.00 |
| 2327 | 0.00 | 0.00 | 2328 | 0.00 | 0.00 | 2329 | 0.00 | 0.00 | 2330 | 0.00 | 0.00 | 2331 | 0.00 | 0.00 |
| 2332 | 0.00 | 0.00 | 2333 | 0.00 | 0.00 | 2334 | 0.00 | 0.00 | 2335 | 0.00 | 0.00 | 2336 | 0.00 | 0.00 |
| 2337 | 0.00 | 0.00 | 2338 | 0.00 | 0.00 | 2339 | 0.00 | 0.00 | 2340 | 0.00 | 0.00 | 2341 | 0.00 | 0.00 |
| 2342 | 0.00 | 0.00 | 2343 | 0.00 | 0.00 | 2344 | 0.00 | 0.00 | 2345 | 0.00 | 0.00 | 2346 | 0.00 | 0.00 |
| 2347 | 0.00 | 0.00 | 2348 | 0.00 | 0.00 | 2349 | 0.00 | 0.00 | 2350 | 0.00 | 0.00 | 2351 | 0.00 | 0.00 |
| 2352 | 0.00 | 0.00 | 2353 | 0.00 | 0.00 | 2354 | 0.00 | 0.00 | 2355 | 0.00 | 0.00 | 2356 | 0.00 | 0.00 |
| 2357 | 0.00 | 0.00 | 2358 | 0.00 | 0.00 | 2359 | 0.00 | 0.00 | 2360 | 0.00 | 0.00 | 2361 | 0.00 | 0.00 |
| 2362 | 0.00 | 0.00 | 2363 | 0.00 | 0.00 | 2364 | 0.00 | 0.00 | 2365 | 0.00 | 0.00 | 2366 | 0.00 | 0.00 |
| 2367 | 0.00 | 0.00 | 2368 | 0.00 | 0.00 | 2369 | 0.00 | 0.00 | 2370 | 0.00 | 0.00 | 2371 | 0.00 | 0.00 |
| 2372 | 0.00 | 0.00 | 2373 | 0.00 | 0.00 | 2374 | 0.00 | 0.00 | 2375 | 0.00 | 0.00 | 2376 | 0.00 | 0.00 |
| 2377 | 0.00 | 0.00 | 2378 | 0.00 | 0.00 | 2379 | 0.00 | 0.00 | 2380 | 0.00 | 0.00 | 2381 | 0.00 | 0.00 |
| 2382 | 0.00 | 0.00 | 2383 | 0.00 | 0.00 | 2384 | 0.00 | 0.00 | 2385 | 0.00 | 0.00 | 2386 | 0.00 | 0.00 |
| 2387 | 0.00 | 0.00 | 2388 | 0.00 | 0.00 | 2389 | 0.00 | 0.00 | 2390 | 0.00 | 0.00 | 2391 | 0.00 | 0.00 |
| 2392 | 0.00 | 0.00 | 2393 | 0.00 | 0.00 | 2394 | 0.00 | 0.00 | 2395 | 0.00 | 0.00 | 2396 | 0.00 | 0.00 |
| 2397 | 0.00 | 0.00 | 2398 | 0.00 | 0.00 | 2399 | 0.00 | 0.00 | 2400 | 0.00 | 0.00 | 2401 | 0.00 | 0.00 |
| 2402 | 0.00 | 0.00 | 2403 | 0.00 | 0.00 | 2404 | 0.00 | 0.00 | 2405 | 0.00 | 0.00 | 2406 | 0.00 | 0.00 |
| 2407 | 0.00 | 0.00 | 2408 | 0.00 | 0.00 | 2409 | 0.00 | 0.00 | 2410 | 0.00 | 0.00 | 2411 | 0.00 | 0.00 |
| 2412 | 0.00 | 0.00 | 2414 | 0.00 | 0.00 | 2415 | 0.00 | 0.00 | 2416 | 0.00 | 0.00 | 2417 | 0.00 | 0.00 |
| 2418 | 0.00 | 0.00 | 2420 | 0.00 | 0.00 | 2421 | 0.00 | 0.00 | 2422 | 0.00 | 0.00 | 2423 | 0.00 | 0.00 |
| 2424 | 0.00 | 0.00 | 2425 | 0.00 | 0.00 | 2426 | 0.00 | 0.00 | 2427 | 0.00 | 0.00 | 2428 | 0.00 | 0.00 |
| 2429 | 0.00 | 0.00 | 2430 | 0.00 | 0.00 | 2431 | 0.00 | 0.00 | 2432 | 0.00 | 0.00 | 2433 | 0.00 | 0.00 |
| 2434 | 0.00 | 0.00 | 2435 | 0.00 | 0.00 | 2436 | 0.00 | 0.00 | 2437 | 0.00 | 0.00 | 2439 | 0.00 | 0.00 |
| 2440 | 0.00 | 0.00 | 2442 | 0.00 | 0.00 | 2443 | 0.00 | 0.00 | 2446 | 0.00 | 0.00 | 2448 | 0.00 | 0.00 |
| 2449 | 0.00 | 0.00 | 2450 | 0.00 | 0.00 | 2451 | 0.00 | 0.00 | 2452 | 0.00 | 0.00 | 2453 | 0.00 | 0.00 |
| 2454 | 0.00 | 0.00 | 2455 | 0.00 | 0.00 | 2456 | 0.00 | 0.00 | 2457 | 0.00 | 0.00 | 2458 | 0.00 | 0.00 |
| 2459 | 0.00 | 0.00 | 2460 | 0.00 | 0.00 | 2461 | 0.00 | 0.00 | 2462 | 0.00 | 0.00 | 2463 | 0.00 | 0.00 |
| 2464 | 0.00 | 0.00 | 2465 | 0.00 | 0.00 | 2466 | 0.00 | 0.00 | 2467 | 0.00 | 0.00 | 2468 | 0.00 | 0.00 |
| 2469 | 0.00 | 0.00 | 2470 | 0.00 | 0.00 | 2471 | 0.00 | 0.00 | 2472 | 0.00 | 0.00 | 2473 | 0.00 | 0.00 |
| 2475 | 0.00 | 0.00 | 2476 | 0.00 | 0.00 | 2477 | 0.00 | 0.00 | 2478 | 0.00 | 0.00 | 2480 | 0.00 | 0.00 |
| 2481 | 0.00 | 0.00 | 2483 | 0.00 | 0.00 | 2484 | 0.00 | 0.00 | 2485 | 0.00 | 0.00 | 2486 | 0.00 | 0.00 |
| 2488 | 0.00 | 0.00 | 2489 | 0.00 | 0.00 | 2491 | 0.00 | 0.00 | 2492 | 0.00 | 0.00 | 2493 | 0.00 | 0.00 |
| 2495 | 0.00 | 0.00 | 2496 | 0.00 | 0.00 | 2498 | 0.00 | 0.00 | 2499 | 0.00 | 0.00 | 2501 | 0.00 | 0.00 |
| 2502 | 0.00 | 0.00 | 2503 | 0.00 | 0.00 | 2504 | 0.00 | 0.00 | 2505 | 0.00 | 0.00 | 2506 | 0.00 | 0.00 |
| 2507 | 0.00 | 0.00 | 2508 | 0.00 | 0.00 | 2513 | 0.00 | 0.00 | 2514 | 0.00 | 0.00 | 2517 | 0.00 | 0.00 |
| 2518 | 0.00 | 0.00 | 2519 | 0.00 | 0.00 | 2521 | 0.00 | 0.00 | 2523 | 0.00 | 0.00 | 2524 | 0.00 | 0.00 |
| 2526 | 0.00 | 0.00 | 2531 | 0.00 | 0.00 | 2532 | 0.00 | 0.00 | 2533 | 0.00 | 0.00 | 2535 | 0.00 | 0.00 |
| 2536 | 0.00 | 0.00 | 2537 | 0.00 | 0.00 | 2541 | 0.00 | 0.00 | 2542 | 0.00 | 0.00 | 2543 | 0.00 | 0.00 |
| 2544 | 0.00 | 0.00 | 2545 | 0.00 | 0.00 | 2546 | 0.00 | 0.00 | 2550 | 0.00 | 0.00 | 2554 | 0.00 | 0.00 |
| 2555 | 0.00 | 0.00 | 2556 | 0.00 | 0.00 | 2557 | 0.00 | 0.00 | 2562 | 0.00 | 0.00 | 2563 | 0.00 | 0.00 |
| 2572 | 0.00 | 0.00 | 2573 | 0.00 | 0.00 | 2574 | 0.00 | 0.00 | 2575 | 0.00 | 0.00 | 2576 | 0.00 | 0.00 |
| 2577 | 0.00 | 0.00 | 2578 | 0.00 | 0.00 | 2579 | 0.00 | 0.00 | 2580 | 0.00 | 0.00 | 2581 | 0.00 | 0.00 |
| 2582 | 0.00 | 0.00 | 2583 | 0.00 | 0.00 | 2584 | 0.00 | 0.00 | 2585 | 0.00 | 0.00 | 2586 | 0.00 | 0.00 |
| 2587 | 0.00 | 0.00 | 2588 | 0.00 | 0.00 | 2591 | 0.00 | 0.00 | 2592 | 0.00 | 0.00 | 2593 | 0.00 | 0.00 |

ANUAL 06/07 * SETEMBRO 2006 PESADA S/SE 19H N/NE 19H * ANAT0 - FSE - C13
RELATORIO DE ERROS DE POTENCIA

| BARRA NUM. | ERRO DE POTENCIA MW | Mvar | BARRA NUM. | ERRO DE POTENCIA MW | Mvar | BARRA NUM. | ERRO DE POTENCIA MW | Mvar | BARRA NUM. | ERRO DE POTENCIA MW | Mvar | BARRA NUM. | ERRO DE POTENCIA MW | Mvar |
|---|---|---|---|---|---|---|---|---|---|---|---|---|---|---|
| 2594 | 0.00 | 0.00 | 2595 | 0.00 | 0.00 | 2596 | 0.00 | 0.00 | 2597 | 0.00 | 0.00 | 2598 | 0.00 | 0.00 |
| 2600 | 0.00 | 0.00 | 2601 | 0.00 | 0.00 | 2602 | 0.00 | 0.00 | 2603 | 0.00 | 0.00 | 2604 | 0.00 | 0.00 |
| 2605 | 0.00 | 0.00 | 2606 | 0.00 | 0.00 | 2607 | 0.00 | 0.00 | 2608 | 0.00 | 0.00 | 2609 | 0.00 | 0.00 |
| 2610 | 0.00 | 0.00 | 2611 | 0.00 | 0.00 | 2612 | 0.00 | 0.00 | 2613 | 0.00 | 0.00 | 2614 | 0.00 | 0.00 |
| 2615 | 0.00 | 0.00 | 2616 | 0.00 | 0.00 | 2617 | 0.00 | 0.00 | 2618 | 0.00 | 0.00 | 2619 | 0.00 | 0.00 |
| 2620 | 0.00 | 0.00 | 2621 | 0.00 | 0.00 | 2622 | 0.00 | 0.00 | 2623 | 0.00 | 0.00 | 2624 | 0.00 | 0.00 |
| 2625 | 0.00 | 0.00 | 2626 | 0.00 | 0.00 | 2627 | 0.00 | 0.00 | 2628 | 0.00 | 0.00 | 2629 | 0.00 | 0.00 |
| 2630 | 0.00 | 0.00 | 2631 | 0.00 | 0.00 | 2632 | 0.00 | 0.00 | 2633 | 0.00 | 0.00 | 2635 | 0.00 | 0.00 |
| 2636 | 0.00 | 0.00 | 2637 | 0.00 | 0.00 | 2638 | 0.00 | 0.00 | 2639 | 0.00 | 0.00 | 2640 | 0.00 | 0.00 |
| 2641 | 0.00 | 0.00 | 2642 | 0.00 | 0.00 | 2643 | 0.00 | 0.00 | 2644 | 0.00 | 0.00 | 2645 | 0.00 | 0.00 |
| 2646 | 0.00 | 0.00 | 2647 | 0.00 | 0.00 | 2648 | 0.00 | 0.00 | 2649 | 0.00 | 0.00 | 2650 | 0.00 | 0.00 |
| 2651 | 0.00 | 0.00 | 2652 | 0.00 | 0.00 | 2653 | 0.00 | 0.00 | 2654 | 0.00 | 0.00 | 2655 | 0.00 | 0.00 |
| 2656 | 0.00 | 0.00 | 2657 | 0.00 | 0.00 | 2658 | 0.00 | 0.00 | 2659 | 0.00 | 0.00 | 2660 | 0.00 | 0.00 |
| 2661 | 0.00 | 0.00 | 2662 | 0.00 | 0.00 | 2663 | 0.00 | 0.00 | 2664 | 0.00 | 0.00 | 2665 | 0.00 | 0.00 |
| 2666 | 0.00 | 0.00 | 2667 | 0.00 | 0.00 | 2668 | 0.00 | 0.00 | 2669 | 0.00 | 0.00 | 2672 | 0.00 | 0.00 |
| 2673 | 0.00 | 0.00 | 2674 | 0.00 | 0.00 | 2675 | 0.00 | 0.00 | 2676 | 0.00 | 0.00 | 2677 | 0.00 | 0.00 |
| 2678 | 0.00 | 0.00 | 2679 | 0.00 | 0.00 | 2680 | 0.00 | 0.00 | 2681 | 0.00 | 0.00 | 2682 | 0.00 | 0.00 |
| 2683 | 0.00 | 0.00 | 2684 | 0.00 | 0.00 | 2686 | 0.00 | 0.00 | 2687 | 0.00 | 0.00 | 2688 | 0.00 | 0.00 |
| 2689 | 0.00 | 0.00 | 2690 | 0.00 | 0.00 | 2691 | 0.00 | 0.00 | 2692 | 0.00 | 0.00 | 2693 | 0.00 | 0.00 |
| 2694 | 0.00 | 0.00 | 2695 | 0.00 | 0.00 | 2696 | 0.00 | 0.00 | 2697 | 0.00 | 0.00 | 2706 | 0.00 | 0.00 |
| 2709 | 0.00 | 0.00 | 2710 | 0.00 | 0.00 | 2711 | 0.00 | 0.00 | 2712 | 0.00 | 0.00 | 2713 | 0.00 | 0.00 |
| 2714 | 0.00 | 0.00 | 2717 | 0.00 | 0.00 | 2718 | 0.00 | 0.00 | 2719 | 0.00 | 0.00 | 2721 | 0.00 | 0.00 |
| 2722 | 0.00 | 0.00 | 2723 | 0.00 | 0.00 | 2725 | 0.00 | 0.00 | 2726 | 0.00 | 0.00 | 2727 | 0.00 | 0.00 |
| 2729 | 0.00 | 0.00 | 2731 | 0.00 | 0.00 | 2733 | 0.00 | 0.00 | 2735 | 0.00 | 0.00 | 2736 | 0.00 | 0.00 |
| 2737 | 0.00 | 0.00 | 2738 | 0.00 | 0.00 | 2739 | 0.00 | 0.00 | 2740 | 0.00 | 0.00 | 2741 | 0.00 | 0.00 |
| 2742 | 0.00 | 0.00 | 2744 | 0.00 | 0.00 | 2746 | 0.00 | 0.00 | 2747 | 0.00 | 0.00 | 2750 | 0.00 | 0.00 |
| 2751 | 0.00 | 0.00 | 2752 | 0.00 | 0.00 | 2754 | 0.00 | 0.00 | 2760 | 0.00 | 0.00 | 2761 | 0.00 | 0.00 |
| 2762 | 0.00 | 0.00 | 2763 | 0.00 | 0.00 | 2765 | 0.00 | 0.00 | 2768 | 0.00 | 0.00 | 2769 | 0.00 | 0.00 |
| 2770 | 0.00 | 0.00 | 2771 | 0.00 | 0.00 | 2773 | 0.00 | 0.00 | 2775 | 0.00 | 0.00 | 2776 | 0.00 | 0.00 |
| 2778 | 0.00 | 0.00 | 2780 | 0.00 | 0.00 | 2783 | 0.00 | 0.00 | 2784 | 0.00 | 0.00 | 2785 | 0.00 | 0.00 |
| 2786 | 0.00 | 0.00 | 2788 | 0.00 | 0.00 | 2789 | 0.00 | 0.00 | 2790 | 0.00 | 0.00 | 2791 | 0.00 | 0.00 |
| 2794 | 0.00 | 0.00 | 2799 | 0.00 | 0.00 | 2800 | 0.00 | 0.00 | 2802 | 0.00 | 0.00 | 2803 | 0.00 | 0.00 |
| 2804 | 0.00 | 0.00 | 2808 | 0.00 | 0.00 | 2809 | 0.00 | 0.00 | 2811 | 0.00 | 0.00 | 2812 | 0.00 | 0.00 |
| 2816 | 0.00 | 0.00 | 2820 | 0.00 | 0.00 | 2821 | 0.00 | 0.00 | 2822 | 0.00 | 0.00 | 2823 | 0.00 | 0.00 |
| 2824 | 0.00 | 0.00 | 2825 | 0.00 | 0.00 | 2826 | 0.00 | 0.00 | 2827 | 0.00 | 0.00 | 2828 | 0.00 | 0.00 |
| 2830 | 0.00 | 0.00 | 2832 | 0.00 | 0.00 | 2834 | 0.00 | 0.00 | 2836 | 0.00 | 0.00 | 2837 | 0.00 | 0.00 |
| 2838 | 0.00 | 0.00 | 2839 | 0.00 | 0.00 | 2840 | 0.00 | 0.00 | 2841 | 0.00 | 0.00 | 2842 | 0.00 | 0.00 |
| 2844 | 0.00 | 0.00 | 2845 | 0.00 | 0.00 | 2848 | 0.00 | 0.00 | 2851 | 0.00 | 0.00 | 2852 | 0.00 | 0.00 |
| 2853 | 0.00 | 0.00 | 2857 | 0.00 | 0.00 | 2859 | 0.00 | 0.00 | 2860 | 0.00 | 0.00 | 2861 | 0.00 | 0.00 |
| 2862 | 0.00 | 0.00 | 2865 | 0.00 | 0.00 | 2866 | 0.00 | 0.00 | 2867 | 0.00 | 0.00 | 2869 | 0.00 | 0.00 |
| 2870 | 0.00 | 0.00 | 2871 | 0.00 | 0.00 | 2872 | 0.00 | 0.00 | 2873 | 0.00 | 0.00 | 2874 | 0.00 | 0.00 |
| 2875 | 0.00 | 0.00 | 2876 | 0.00 | 0.00 | 2880 | 0.00 | 0.00 | 2884 | 0.00 | 0.00 | 2885 | 0.00 | 0.00 |
| 2886 | 0.00 | 0.00 | 2889 | 0.00 | 0.00 | 2890 | 0.00 | 0.00 | 2892 | 0.00 | 0.00 | 2893 | 0.00 | 0.00 |
| 2894 | 0.00 | 0.00 | 2895 | 0.00 | 0.00 | 2896 | 0.00 | 0.00 | 2897 | 0.00 | 0.00 | 2898 | 0.00 | 0.00 |
| 2950 | 0.00 | 0.00 | 2951 | 0.00 | 0.00 | 2952 | 0.00 | 0.00 | 2953 | 0.00 | 0.00 | 2954 | 0.00 | 0.00 |
| 2955 | 0.00 | 0.00 | 2956 | 0.00 | 0.00 | 2957 | 0.00 | 0.00 | 2958 | 0.00 | 0.00 | 2959 | 0.00 | 0.00 |
| 2960 | 0.00 | 0.00 | 2961 | 0.00 | 0.00 | 2962 | 0.00 | 0.00 | 2963 | 0.00 | 0.00 | 2964 | 0.00 | 0.00 |
| 2965 | 0.00 | 0.00 | 2966 | 0.00 | 0.00 | 2967 | 0.00 | 0.00 | 2968 | 0.00 | 0.00 | 2969 | 0.00 | 0.00 |
| 2970 | 0.00 | 0.00 | 2971 | 0.00 | 0.00 | 2972 | 0.00 | 0.00 | 2973 | 0.00 | 0.00 | 2974 | 0.00 | 0.00 |
| 2975 | 0.00 | 0.00 | 2976 | 0.00 | 0.00 | 2977 | 0.00 | 0.00 | 2978 | 0.00 | 0.00 | 2980 | 0.00 | 0.00 |

ANUAL 06/07 * SETEMBRO 2006 PESADA S/SE 19H N/NE 19H * ANAT0 - FSE - C13
RELATORIO DE ERROS DE POTENCIA

| BARRA NUM. | ERRO DE POTENCIA MW | Mvar | BARRA NUM. | ERRO DE POTENCIA MW | Mvar | BARRA NUM. | ERRO DE POTENCIA MW | Mvar | BARRA NUM. | ERRO DE POTENCIA MW | Mvar | BARRA NUM. | ERRO DE POTENCIA MW | Mvar |
|---|---|---|---|---|---|---|---|---|---|---|---|---|---|---|
| 2981 | 0.00 | 0.00 | 2982 | 0.00 | 0.00 | 2983 | 0.00 | 0.00 | 2984 | 0.00 | 0.00 | 2985 | 0.00 | 0.00 |
| 2987 | 0.00 | 0.00 | 2988 | 0.00 | 0.00 | 2989 | 0.00 | 0.00 | 2990 | 0.00 | 0.00 | 2991 | 0.00 | 0.00 |
| 2992 | 0.00 | 0.00 | 2993 | 0.00 | 0.00 | 2994 | 0.00 | 0.00 | 2995 | 0.00 | 0.00 | 2996 | 0.00 | 0.00 |
| 2998 | 0.00 | 0.00 | 2999 | 0.00 | 0.00 | 3000 | 0.00 | 0.00 | 3001 | 0.00 | 0.00 | 3003 | 0.00 | 0.00 |
| 3045 | 0.00 | 0.00 | 3046 | 0.00 | 0.00 | 3048 | 0.00 | 0.00 | 3051 | 0.00 | 0.00 | 3054 | 0.00 | 0.00 |
| 3057 | 0.00 | 0.00 | 3060 | 0.00 | 0.00 | 3063 | 0.00 | 0.00 | 3066 | 0.00 | 0.00 | 3069 | 0.00 | 0.00 |
| 3072 | 0.00 | 0.00 | 3075 | 0.00 | 0.00 | 3078 | 0.00 | 0.00 | 3081 | 0.00 | 0.00 | 3084 | 0.00 | 0.00 |
| 3087 | 0.00 | 0.00 | 3090 | 0.00 | 0.00 | 3125 | 0.00 | 0.00 | 3126 | 0.00 | 0.00 | 3127 | 0.00 | 0.00 |
| 3130 | 0.00 | 0.00 | 3131 | 0.00 | 0.00 | 3132 | 0.00 | 0.00 | 3133 | 0.00 | 0.00 | 3135 | 0.00 | 0.00 |
| 3136 | 0.00 | 0.00 | 3137 | 0.00 | 0.00 | 3138 | 0.00 | 0.00 | 3140 | 0.00 | 0.00 | 3141 | 0.00 | 0.00 |
| 3142 | 0.00 | 0.00 | 3143 | 0.00 | 0.00 | 3144 | 0.00 | 0.00 | 3145 | 0.00 | 0.00 | 3146 | 0.00 | 0.00 |
| 3147 | 0.00 | 0.00 | 3148 | 0.00 | 0.00 | 3150 | 0.00 | 0.00 | 3153 | 0.00 | 0.00 | 3154 | 0.00 | 0.00 |
| 3155 | 0.00 | 0.00 | 3156 | 0.00 | 0.00 | 3157 | 0.00 | 0.00 | 3158 | 0.00 | 0.00 | 3159 | 0.00 | 0.00 |
| 3160 | 0.00 | 0.00 | 3171 | 0.00 | 0.00 | 3172 | 0.00 | 0.00 | 3173 | 0.00 | 0.00 | 3174 | 0.00 | 0.00 |
| 3175 | 0.00 | 0.00 | 3176 | 0.00 | 0.00 | 3177 | 0.00 | 0.00 | 3178 | 0.00 | 0.00 | 3180 | 0.00 | 0.00 |
| 3190 | 0.00 | 0.00 | 3191 | 0.00 | 0.00 | 3192 | 0.00 | 0.00 | 3193 | 0.00 | 0.00 | 3194 | 0.00 | 0.00 |
| 3195 | 0.00 | 0.00 | 3196 | 0.00 | 0.00 | 3197 | 0.00 | 0.00 | 3198 | 0.00 | 0.00 | 3199 | 0.00 | 0.00 |
| 3300 | 0.00 | 0.00 | 3301 | 0.00 | 0.00 | 3302 | 0.00 | 0.00 | 3303 | 0.00 | 0.00 | 3304 | 0.00 | 0.00 |
| 3305 | 0.00 | 0.00 | 3306 | 0.00 | 0.00 | 3307 | 0.00 | 0.00 | 3308 | 0.00 | 0.00 | 3309 | 0.00 | 0.00 |
| 3310 | 0.00 | 0.00 | 3311 | 0.00 | 0.00 | 3312 | 0.00 | 0.00 | 3313 | 0.00 | 0.00 | 3314 | 0.00 | 0.00 |
| 3315 | 0.00 | 0.00 | 3316 | 0.00 | 0.00 | 3317 | 0.00 | 0.00 | 3318 | 0.00 | 0.00 | 3319 | 0.00 | 0.00 |
| 3320 | 0.00 | 0.00 | 3321 | 0.00 | 0.00 | 3322 | 0.00 | 0.00 | 3323 | 0.00 | 0.00 | 3324 | 0.00 | 0.00 |
| 3325 | 0.00 | 0.00 | 3326 | 0.00 | 0.00 | 3327 | 0.00 | 0.00 | 3328 | 0.00 | 0.00 | 3329 | 0.00 | 0.00 |
| 3330 | 0.00 | 0.00 | 3331 | 0.00 | 0.00 | 3332 | 0.00 | 0.00 | 3333 | 0.00 | 0.00 | 3334 | 0.00 | 0.00 |
| 3335 | 0.00 | 0.00 | 3336 | 0.00 | 0.00 | 3337 | 0.00 | 0.00 | 3340 | 0.00 | 0.00 | 3343 | 0.00 | 0.00 |
| 3411 | 0.00 | 0.00 | 3412 | 0.00 | 0.00 | 3413 | 0.00 | 0.00 | 3414 | 0.00 | 0.00 | 3415 | 0.00 | 0.00 |
| 3416 | 0.00 | 0.00 | 3417 | 0.00 | 0.00 | 3418 | 0.00 | 0.00 | 3419 | 0.00 | 0.00 | 3422 | 0.00 | 0.00 |
| 3428 | 0.00 | 0.00 | 3429 | 0.00 | 0.00 | 3436 | 0.00 | 0.00 | 3437 | 0.00 | 0.00 | 3440 | 0.00 | 0.00 |
| 3441 | 0.00 | 0.00 | 3443 | 0.00 | 0.00 | 3444 | 0.00 | 0.00 | 3446 | 0.00 | 0.00 | 3447 | 0.00 | 0.00 |
| 3455 | 0.00 | 0.00 | 3456 | 0.00 | 0.00 | 3459 | 0.00 | 0.00 | 3462 | 0.00 | 0.00 | 3465 | 0.00 | 0.00 |
| 3467 | 0.00 | 0.00 | 3471 | 0.00 | 0.00 | 3473 | 0.00 | 0.00 | 3474 | 0.00 | 0.00 | 3475 | 0.00 | 0.00 |
| 3476 | 0.00 | 0.00 | 3477 | 0.00 | 0.00 | 3481 | 0.00 | 0.00 | 3484 | 0.00 | 0.00 | 3485 | 0.00 | 0.00 |
| 3487 | 0.00 | 0.00 | 3488 | 0.00 | 0.00 | 3489 | 0.00 | 0.00 | 3490 | 0.00 | 0.00 | 3491 | 0.00 | 0.00 |
| 3492 | 0.00 | 0.00 | 3493 | 0.00 | 0.00 | 3494 | 0.00 | 0.00 | 3495 | 0.00 | 0.00 | 3496 | 0.00 | 0.00 |
| 3497 | 0.00 | 0.00 | 3498 | 0.00 | 0.00 | 3499 | 0.00 | 0.00 | 3583 | 0.00 | 0.00 | 3601 | 0.00 | 0.00 |
| 3602 | 0.00 | 0.00 | 3603 | 0.00 | 0.00 | 3604 | 0.00 | 0.00 | 3605 | 0.00 | 0.00 | 3606 | 0.00 | 0.00 |
| 3607 | 0.00 | 0.00 | 3608 | 0.00 | 0.00 | 3613 | 0.00 | 0.00 | 3614 | 0.00 | 0.00 | 3615 | 0.00 | 0.00 |
| 3616 | 0.00 | 0.00 | 3617 | 0.00 | 0.00 | 3618 | 0.00 | 0.00 | 3619 | 0.00 | 0.00 | 3620 | 0.00 | 0.00 |
| 3621 | 0.00 | 0.00 | 3622 | 0.00 | 0.00 | 3623 | 0.00 | 0.00 | 3624 | 0.00 | 0.00 | 3625 | 0.00 | 0.00 |
| 3627 | 0.00 | 0.00 | 3628 | 0.00 | 0.00 | 3629 | 0.00 | 0.00 | 3630 | 0.00 | 0.00 | 3632 | 0.00 | 0.00 |
| 3638 | 0.00 | 0.00 | 3639 | 0.00 | 0.00 | 3640 | 0.00 | 0.00 | 3641 | 0.00 | 0.00 | 3662 | 0.00 | 0.00 |
| 3663 | 0.00 | 0.00 | 3700 | 0.00 | 0.00 | 3701 | 0.00 | 0.00 | 3702 | 0.00 | 0.00 | 3703 | 0.00 | 0.00 |
| 3704 | 0.00 | 0.00 | 3705 | 0.00 | 0.00 | 3706 | 0.00 | 0.00 | 3709 | 0.00 | 0.00 | 3710 | 0.00 | 0.00 |
| 3711 | 0.00 | 0.00 | 3712 | 0.00 | 0.00 | 3713 | 0.00 | 0.00 | 3719 | 0.00 | 0.00 | 3720 | 0.00 | 0.00 |
| 3721 | 0.00 | 0.00 | 3722 | 0.00 | 0.00 | 3723 | 0.00 | 0.00 | 3724 | 0.00 | 0.00 | 3726 | 0.00 | 0.00 |
| 3727 | 0.00 | 0.00 | 3728 | 0.00 | 0.00 | 3729 | 0.00 | 0.00 | 3735 | 0.00 | 0.00 | 3736 | 0.00 | 0.00 |
| 3737 | 0.00 | 0.00 | 3738 | 0.00 | 0.00 | 3739 | 0.00 | 0.00 | 3740 | 0.00 | 0.00 | 3801 | 0.00 | 0.00 |
| 3802 | 0.00 | 0.00 | 3803 | 0.00 | 0.00 | 3804 | 0.00 | 0.00 | 3805 | 0.00 | 0.00 | 3806 | 0.00 | 0.00 |
| 3807 | 0.00 | 0.00 | 3808 | 0.00 | 0.00 | 3809 | 0.00 | 0.00 | 3810 | 0.00 | 0.00 | 3811 | 0.00 | 0.00 |
| 3812 | 0.00 | 0.00 | 3813 | 0.00 | 0.00 | 3814 | 0.00 | 0.00 | 3815 | 0.00 | 0.00 | 3816 | 0.00 | 0.00 |

ANUAL 06/07 * SETEMBRO 2006 PESADA S/SE 19H N/NE 19H * ANAT0 - FSE - C13
RELATORIO DE ERROS DE POTENCIA

| BARRA NUM. | ERRO DE POTENCIA MW | Mvar | BARRA NUM. | ERRO DE POTENCIA MW | Mvar | BARRA NUM. | ERRO DE POTENCIA MW | Mvar | BARRA NUM. | ERRO DE POTENCIA MW | Mvar | BARRA NUM. | ERRO DE POTENCIA MW | Mvar |
|---|---|---|---|---|---|---|---|---|---|---|---|---|---|---|
| 3817 | 0.00 | 0.00 | 3818 | 0.00 | 0.00 | 3819 | 0.00 | 0.00 | 3820 | 0.00 | 0.00 | 3821 | 0.00 | 0.00 |
| 3822 | 0.00 | 0.00 | 3823 | 0.00 | 0.00 | 3824 | 0.00 | 0.00 | 3825 | 0.00 | 0.00 | 3826 | 0.00 | 0.00 |
| 3827 | 0.00 | 0.00 | 3828 | 0.00 | 0.00 | 3829 | 0.00 | 0.00 | 3830 | 0.00 | 0.00 | 3831 | 0.00 | 0.00 |
| 3832 | 0.00 | 0.00 | 3833 | 0.00 | 0.00 | 3834 | 0.00 | 0.00 | 3835 | 0.00 | 0.00 | 3836 | 0.00 | 0.00 |
| 3838 | 0.00 | 0.00 | 3841 | 0.00 | 0.00 | 3842 | 0.00 | 0.00 | 3843 | 0.00 | 0.00 | 3844 | 0.00 | 0.00 |
| 3845 | 0.00 | 0.00 | 3846 | 0.00 | 0.00 | 3847 | 0.00 | 0.00 | 3848 | 0.00 | 0.00 | 3849 | 0.00 | 0.00 |
| 3850 | 0.00 | 0.00 | 3851 | 0.00 | 0.00 | 3852 | 0.00 | 0.00 | 3853 | 0.00 | 0.00 | 3854 | 0.00 | 0.00 |
| 3855 | 0.00 | 0.00 | 3856 | 0.00 | 0.00 | 3857 | 0.00 | 0.00 | 3858 | 0.00 | 0.00 | 3859 | 0.00 | 0.00 |
| 3860 | 0.00 | 0.00 | 3861 | 0.00 | 0.00 | 3862 | 0.00 | 0.00 | 3863 | 0.00 | 0.00 | 3864 | 0.00 | 0.00 |
| 3865 | 0.00 | 0.00 | 3866 | 0.00 | 0.00 | 3867 | 0.00 | 0.00 | 3868 | 0.00 | 0.00 | 3869 | 0.00 | 0.00 |
| 3870 | 0.00 | 0.00 | 3871 | 0.00 | 0.00 | 3872 | 0.00 | 0.00 | 3873 | 0.00 | 0.00 | 3874 | 0.00 | 0.00 |
| 3876 | 0.00 | 0.00 | 3877 | 0.00 | 0.00 | 3878 | 0.00 | 0.00 | 3879 | 0.00 | 0.00 | 3880 | 0.00 | 0.00 |
| 3881 | 0.00 | 0.00 | 3882 | 0.00 | 0.00 | 3883 | 0.00 | 0.00 | 3884 | 0.00 | 0.00 | 3885 | 0.00 | 0.00 |
| 3886 | 0.00 | 0.00 | 3887 | 0.00 | 0.00 | 3888 | 0.00 | 0.00 | 3889 | 0.00 | 0.00 | 3890 | 0.00 | 0.00 |
| 3891 | 0.00 | 0.00 | 3892 | 0.00 | 0.00 | 3893 | 0.00 | 0.00 | 3894 | 0.00 | 0.00 | 3895 | 0.00 | 0.00 |
| 3896 | 0.00 | 0.00 | 3897 | 0.00 | 0.00 | 3898 | 0.00 | 0.00 | 3899 | 0.00 | 0.00 | 3900 | 0.00 | 0.00 |
| 3901 | 0.00 | 0.00 | 3902 | 0.00 | 0.00 | 3903 | 0.00 | 0.00 | 3904 | 0.00 | 0.00 | 3908 | 0.00 | 0.00 |
| 3909 | 0.00 | 0.00 | 3911 | 0.00 | 0.00 | 3916 | 0.00 | 0.00 | 3917 | 0.00 | 0.00 | 3918 | 0.00 | 0.00 |
| 3919 | 0.00 | 0.00 | 3920 | 0.00 | 0.00 | 3921 | 0.00 | 0.00 | 3922 | 0.00 | 0.00 | 3923 | 0.00 | 0.00 |
| 3924 | 0.00 | 0.00 | 3925 | 0.00 | 0.00 | 3926 | 0.00 | 0.00 | 3927 | 0.00 | 0.00 | 3928 | 0.00 | 0.00 |
| 3929 | 0.00 | 0.00 | 3930 | 0.00 | 0.00 | 3931 | 0.00 | 0.00 | 3932 | 0.00 | 0.00 | 3933 | 0.00 | 0.00 |
| 3934 | 0.00 | 0.00 | 3935 | 0.00 | 0.00 | 3936 | 0.00 | 0.00 | 3937 | 0.00 | 0.00 | 3938 | 0.00 | 0.00 |
| 3940 | 0.00 | 0.00 | 3941 | 0.00 | 0.00 | 3946 | 0.00 | 0.00 | 3947 | 0.00 | 0.00 | 3948 | 0.00 | 0.00 |
| 3958 | 0.00 | 0.00 | 3960 | 0.00 | 0.00 | 3961 | 0.00 | 0.00 | 3962 | 0.00 | 0.00 | 3963 | 0.00 | 0.00 |
| 3964 | 0.00 | 0.00 | 3965 | 0.00 | 0.00 | 3966 | 0.00 | 0.00 | 3970 | 0.00 | 0.00 | 3972 | 0.00 | 0.00 |
| 3974 | 0.00 | 0.00 | 3975 | 0.00 | 0.00 | 3976 | 0.00 | 0.00 | 3977 | 0.00 | 0.00 | 3978 | 0.00 | 0.00 |
| 3988 | 0.00 | 0.00 | 3989 | 0.00 | 0.00 | 4001 | 0.00 | 0.00 | 4002 | 0.00 | 0.00 | 4003 | 0.00 | 0.00 |
| 4004 | 0.00 | 0.00 | 4005 | 0.00 | 0.00 | 4006 | 0.00 | 0.00 | 4007 | 0.00 | 0.00 | 4008 | 0.00 | 0.00 |
| 4009 | 0.00 | 0.00 | 4010 | 0.00 | 0.00 | 4011 | 0.00 | 0.00 | 4012 | 0.00 | 0.00 | 4013 | 0.00 | 0.00 |
| 4014 | 0.00 | 0.00 | 4015 | 0.00 | 0.00 | 4016 | 0.00 | 0.00 | 4017 | 0.00 | 0.00 | 4018 | 0.00 | 0.00 |
| 4020 | 0.00 | 0.00 | 4021 | 0.00 | 0.00 | 4022 | 0.00 | 0.00 | 4023 | 0.00 | 0.00 | 4024 | 0.00 | 0.00 |
| 4025 | 0.00 | 0.00 | 4026 | 0.00 | 0.00 | 4027 | 0.00 | 0.00 | 4028 | 0.00 | 0.00 | 4029 | 0.00 | 0.00 |
| 4030 | 0.00 | 0.00 | 4031 | 0.00 | 0.00 | 4032 | 0.00 | 0.00 | 4033 | 0.00 | 0.00 | 4036 | 0.00 | 0.00 |
| 4037 | 0.00 | 0.00 | 4038 | 0.00 | 0.00 | 4039 | 0.00 | 0.00 | 4041 | 0.00 | 0.00 | 4042 | 0.00 | 0.00 |
| 4043 | 0.00 | 0.00 | 4044 | 0.00 | 0.00 | 4050 | 0.00 | 0.00 | 4052 | 0.00 | 0.00 | 4053 | 0.00 | 0.00 |
| 4056 | 0.00 | 0.00 | 4057 | 0.00 | 0.00 | 4058 | 0.00 | 0.00 | 4059 | 0.00 | 0.00 | 4061 | 0.00 | 0.00 |
| 4062 | 0.00 | 0.00 | 4063 | 0.00 | 0.00 | 4064 | 0.00 | 0.00 | 4065 | 0.00 | 0.00 | 4070 | 0.00 | 0.00 |
| 4071 | 0.00 | 0.00 | 4080 | 0.00 | 0.00 | 4081 | 0.00 | 0.00 | 4100 | 0.00 | 0.00 | 4101 | 0.00 | 0.00 |
| 4110 | 0.00 | 0.00 | 4111 | 0.00 | 0.00 | 4180 | 0.00 | 0.00 | 4182 | 0.00 | 0.00 | 4200 | 0.00 | 0.00 |
| 4201 | 0.00 | 0.00 | 4202 | 0.00 | 0.00 | 4203 | 0.00 | 0.00 | 4204 | 0.00 | 0.00 | 4205 | 0.00 | 0.00 |
| 4206 | 0.00 | 0.00 | 4207 | 0.00 | 0.00 | 4208 | 0.00 | 0.00 | 4220 | 0.00 | 0.00 | 4221 | 0.00 | 0.00 |
| 4222 | 0.00 | 0.00 | 4223 | 0.00 | 0.00 | 4224 | 0.00 | 0.00 | 4225 | 0.00 | 0.00 | 4226 | 0.00 | 0.00 |
| 4227 | 0.00 | 0.00 | 4228 | 0.00 | 0.00 | 4229 | 0.00 | 0.00 | 4300 | 0.00 | 0.00 | 4301 | 0.00 | 0.00 |
| 4302 | 0.00 | 0.00 | 4303 | 0.00 | 0.00 | 4502 | 0.00 | 0.00 | 4503 | 0.00 | 0.00 | 4505 | 0.00 | 0.00 |
| 4506 | 0.00 | 0.00 | 4509 | 0.00 | 0.00 | 4512 | 0.00 | 0.00 | 4513 | 0.00 | 0.00 | 4515 | 0.00 | 0.00 |
| 4516 | 0.00 | 0.00 | 4520 | 0.00 | 0.00 | 4521 | 0.00 | 0.00 | 4522 | 0.00 | 0.00 | 4523 | 0.00 | 0.00 |
| 4524 | 0.00 | 0.00 | 4525 | 0.00 | 0.00 | 4526 | 0.00 | 0.00 | 4527 | 0.00 | 0.00 | 4528 | 0.00 | 0.00 |
| 4529 | 0.00 | 0.00 | 4530 | 0.00 | 0.00 | 4532 | 0.00 | 0.00 | 4533 | 0.00 | 0.00 | 4534 | 0.00 | 0.00 |
| 4535 | 0.00 | 0.00 | 4536 | 0.00 | 0.00 | 4537 | 0.00 | 0.00 | 4538 | 0.00 | 0.00 | 4539 | 0.00 | 0.00 |
| 4542 | 0.00 | 0.00 | 4552 | 0.00 | 0.00 | 4554 | 0.00 | 0.00 | 4556 | 0.00 | 0.00 | 4559 | 0.00 | 0.00 |

ANUAL 06/07 * SETEMBRO 2006 PESADA S/SE 19H N/NE 19H * ANAT0 - FSE - C13
RELATORIO DE ERROS DE POTENCIA

| BARRA NUM. | ERRO DE POTENCIA MW | Mvar | BARRA NUM. | ERRO DE POTENCIA MW | Mvar | BARRA NUM. | ERRO DE POTENCIA MW | Mvar | BARRA NUM. | ERRO DE POTENCIA MW | Mvar | BARRA NUM. | ERRO DE POTENCIA MW | Mvar |
|---|---|---|---|---|---|---|---|---|---|---|---|---|---|---|
| 4562 | 0.00 | 0.00 | 4564 | 0.00 | 0.00 | 4566 | 0.00 | 0.00 | 4567 | 0.00 | 0.00 | 4568 | 0.00 | 0.00 |
| 4569 | 0.00 | 0.00 | 4572 | 0.00 | 0.00 | 4576 | 0.00 | 0.00 | 4582 | 0.00 | 0.00 | 4583 | 0.00 | 0.00 |
| 4585 | 0.00 | 0.00 | 4586 | 0.00 | 0.00 | 4589 | 0.00 | 0.00 | 4592 | 0.00 | 0.00 | 4593 | 0.00 | 0.00 |
| 4594 | 0.00 | 0.00 | 4596 | 0.00 | 0.00 | 4597 | 0.00 | 0.00 | 4611 | 0.00 | 0.00 | 4613 | 0.00 | 0.00 |
| 4615 | 0.00 | 0.00 | 4619 | 0.00 | 0.00 | 4623 | 0.00 | 0.00 | 4624 | 0.00 | 0.00 | 4625 | 0.00 | 0.00 |
| 4626 | 0.00 | 0.00 | 4627 | 0.00 | 0.00 | 4633 | 0.00 | 0.00 | 4634 | 0.00 | 0.00 | 4636 | 0.00 | 0.00 |
| 4643 | 0.00 | 0.00 | 4646 | 0.00 | 0.00 | 4653 | 0.00 | 0.00 | 4656 | 0.00 | 0.00 | 4663 | 0.00 | 0.00 |
| 4666 | 0.00 | 0.00 | 4673 | 0.00 | 0.00 | 4676 | 0.00 | 0.00 | 4683 | 0.00 | 0.00 | 4686 | 0.00 | 0.00 |
| 4703 | 0.00 | 0.00 | 4706 | 0.00 | 0.00 | 4707 | 0.00 | 0.00 | 4708 | 0.00 | 0.00 | 4709 | 0.00 | 0.00 |
| 4713 | 0.00 | 0.00 | 4716 | 0.00 | 0.00 | 4717 | 0.00 | 0.00 | 4718 | 0.00 | 0.00 | 4723 | 0.00 | 0.00 |
| 4726 | 0.00 | 0.00 | 4727 | 0.00 | 0.00 | 4728 | 0.00 | 0.00 | 4733 | 0.00 | 0.00 | 4736 | 0.00 | 0.00 |
| 4743 | 0.00 | 0.00 | 4746 | 0.00 | 0.00 | 4749 | 0.00 | 0.00 | 4753 | 0.00 | 0.00 | 4754 | 0.00 | 0.00 |
| 4755 | 0.00 | 0.00 | 4757 | 0.00 | 0.00 | 4758 | 0.00 | 0.00 | 4763 | 0.00 | 0.00 | 4766 | 0.00 | 0.00 |
| 4773 | 0.00 | 0.00 | 4776 | 0.00 | 0.00 | 4783 | 0.00 | 0.00 | 4786 | 0.00 | 0.00 | 4796 | 0.00 | 0.00 |
| 4797 | 0.00 | 0.00 | 4801 | 0.00 | 0.00 | 4803 | 0.00 | 0.00 | 4804 | 0.00 | 0.00 | 4805 | 0.00 | 0.00 |
| 4806 | 0.00 | 0.00 | 4807 | 0.00 | 0.00 | 4808 | 0.00 | 0.00 | 4809 | 0.00 | 0.00 | 4810 | 0.00 | 0.00 |
| 4812 | 0.00 | 0.00 | 4813 | 0.00 | 0.00 | 4814 | 0.00 | 0.00 | 4816 | 0.00 | 0.00 | 4820 | 0.00 | 0.00 |
| 4821 | 0.00 | 0.00 | 4823 | 0.00 | 0.00 | 4824 | 0.00 | 0.00 | 4826 | 0.00 | 0.00 | 4827 | 0.00 | 0.00 |
| 4828 | 0.00 | 0.00 | 4829 | 0.00 | 0.00 | 4833 | 0.00 | 0.00 | 4836 | 0.00 | 0.00 | 4840 | 0.00 | 0.00 |
| 4841 | 0.00 | 0.00 | 4842 | 0.00 | 0.00 | 4843 | 0.00 | 0.00 | 4844 | 0.00 | 0.00 | 4845 | 0.00 | 0.00 |
| 4846 | 0.00 | 0.00 | 4847 | 0.00 | 0.00 | 4848 | 0.00 | 0.00 | 4849 | 0.00 | 0.00 | 4851 | 0.00 | 0.00 |
| 4853 | 0.00 | 0.00 | 4855 | 0.00 | 0.00 | 4860 | 0.00 | 0.00 | 4861 | 0.00 | 0.00 | 4862 | 0.00 | 0.00 |
| 4863 | 0.00 | 0.00 | 4865 | 0.00 | 0.00 | 4867 | 0.00 | 0.00 | 4873 | 0.00 | 0.00 | 4876 | 0.00 | 0.00 |
| 4877 | 0.00 | 0.00 | 4880 | 0.00 | 0.00 | 4881 | 0.00 | 0.00 | 4883 | 0.00 | 0.00 | 4886 | 0.00 | 0.00 |
| 4893 | 0.00 | 0.00 | 4896 | 0.00 | 0.00 | 4909 | 0.00 | 0.00 | 4914 | 0.00 | 0.00 | 4916 | 0.00 | 0.00 |
| 4924 | 0.00 | 0.00 | 4925 | 0.00 | 0.00 | 4926 | 0.00 | 0.00 | 4927 | 0.00 | 0.00 | 4929 | 0.00 | 0.00 |
| 4933 | 0.00 | 0.00 | 4936 | 0.00 | 0.00 | 4943 | 0.00 | 0.00 | 4946 | 0.00 | 0.00 | 4953 | 0.00 | 0.00 |
| 4955 | 0.00 | 0.00 | 4959 | 0.00 | 0.00 | 4963 | 0.00 | 0.00 | 4965 | 0.00 | 0.00 | 4966 | 0.00 | 0.00 |
| 4967 | 0.00 | 0.00 | 4973 | 0.00 | 0.00 | 4976 | 0.00 | 0.00 | 4983 | 0.00 | 0.00 | 4985 | 0.00 | 0.00 |
| 4987 | 0.00 | 0.00 | 4988 | 0.00 | 0.00 | 4989 | 0.00 | 0.00 | 4990 | 0.00 | 0.00 | 5001 | 0.00 | 0.00 |
| 5003 | 0.00 | 0.00 | 5004 | 0.00 | 0.00 | 5005 | 0.00 | 0.00 | 5006 | 0.00 | 0.00 | 5007 | 0.00 | 0.00 |
| 5009 | 0.00 | 0.00 | 5010 | 0.00 | 0.00 | 5011 | 0.00 | 0.00 | 5012 | 0.00 | 0.00 | 5013 | 0.00 | 0.00 |
| 5014 | 0.00 | 0.00 | 5015 | 0.00 | 0.00 | 5016 | 0.00 | 0.00 | 5017 | 0.00 | 0.00 | 5018 | 0.00 | 0.00 |
| 5022 | 0.00 | 0.00 | 5023 | 0.00 | 0.00 | 5024 | 0.00 | 0.00 | 5025 | 0.00 | 0.00 | 5026 | 0.00 | 0.00 |
| 5027 | 0.00 | 0.00 | 5028 | 0.00 | 0.00 | 5029 | 0.00 | 0.00 | 5030 | 0.00 | 0.00 | 5031 | 0.00 | 0.00 |
| 5032 | 0.00 | 0.00 | 5033 | 0.00 | 0.00 | 5050 | 0.00 | 0.00 | 5051 | 0.00 | 0.00 | 5052 | 0.00 | 0.00 |
| 5053 | 0.00 | 0.00 | 5054 | 0.00 | 0.00 | 5055 | 0.00 | 0.00 | 5056 | 0.00 | 0.00 | 5060 | 0.00 | 0.00 |
| 5061 | 0.00 | 0.00 | 5062 | 0.00 | 0.00 | 5063 | 0.00 | 0.00 | 5064 | 0.00 | 0.00 | 5065 | 0.00 | 0.00 |
| 5066 | 0.00 | 0.00 | 5100 | 0.00 | 0.00 | 5101 | 0.00 | 0.00 | 5102 | 0.00 | 0.00 | 5103 | 0.00 | 0.00 |
| 5104 | 0.00 | 0.00 | 5105 | 0.00 | 0.00 | 5106 | 0.00 | 0.00 | 5107 | 0.00 | 0.00 | 5110 | 0.00 | 0.00 |
| 5111 | 0.00 | 0.00 | 5113 | 0.00 | 0.00 | 5114 | 0.00 | 0.00 | 5115 | 0.00 | 0.00 | 5116 | 0.00 | 0.00 |
| 5117 | 0.00 | 0.00 | 5118 | 0.00 | 0.00 | 5119 | 0.00 | 0.00 | 5120 | 0.00 | 0.00 | 5121 | 0.00 | 0.00 |
| 5123 | 0.00 | 0.00 | 5125 | 0.00 | 0.00 | 5131 | 0.00 | 0.00 | 5133 | 0.00 | 0.00 | 5140 | 0.00 | 0.00 |
| 5141 | 0.00 | 0.00 | 5142 | 0.00 | 0.00 | 5144 | 0.00 | 0.00 | 5145 | 0.00 | 0.00 | 5147 | 0.00 | 0.00 |
| 5150 | 0.00 | 0.00 | 5151 | 0.00 | 0.00 | 5152 | 0.00 | 0.00 | 5153 | 0.00 | 0.00 | 5154 | 0.00 | 0.00 |
| 5156 | 0.00 | 0.00 | 5157 | 0.00 | 0.00 | 5158 | 0.00 | 0.00 | 5159 | 0.00 | 0.00 | 5160 | 0.00 | 0.00 |
| 5161 | 0.00 | 0.00 | 5162 | 0.00 | 0.00 | 5163 | 0.00 | 0.00 | 5171 | 0.00 | 0.00 | 5172 | 0.00 | 0.00 |
| 5175 | 0.00 | 0.00 | 5181 | 0.00 | 0.00 | 5183 | 0.00 | 0.00 | 5191 | 0.00 | 0.00 | 5193 | 0.00 | 0.00 |
| 5194 | 0.00 | 0.00 | 5195 | 0.00 | 0.00 | 5196 | 0.00 | 0.00 | 5197 | 0.00 | 0.00 | 5201 | 0.00 | 0.00 |
| 5203 | 0.00 | 0.00 | 5204 | 0.00 | 0.00 | 5205 | 0.00 | 0.00 | 5206 | 0.00 | 0.00 | 5211 | 0.00 | 0.00 |

ANUAL 06/07 * SETEMBRO 2006 PESADA S/SE 19H N/NE 19H * ANAT0 - FSE - C13
RELATORIO DE ERROS DE POTENCIA

| BARRA NUM. | ERRO DE POTENCIA MW | Mvar | BARRA NUM. | ERRO DE POTENCIA MW | Mvar | BARRA NUM. | ERRO DE POTENCIA MW | Mvar | BARRA NUM. | ERRO DE POTENCIA MW | Mvar | BARRA NUM. | ERRO DE POTENCIA MW | Mvar |
|---|---|---|---|---|---|---|---|---|---|---|---|---|---|---|
| 5213 | 0.00 | 0.00 | 5214 | 0.00 | 0.00 | 5215 | 0.00 | 0.00 | 5222 | 0.00 | 0.00 | 5223 | 0.00 | 0.00 |
| 5224 | 0.00 | 0.00 | 5225 | 0.00 | 0.00 | 5226 | 0.00 | 0.00 | 5227 | 0.00 | 0.00 | 5228 | 0.00 | 0.00 |
| 5229 | 0.00 | 0.00 | 5230 | 0.00 | 0.00 | 5231 | 0.00 | 0.00 | 5232 | 0.00 | 0.00 | 5233 | 0.00 | 0.00 |
| 5234 | 0.00 | 0.00 | 5235 | 0.00 | 0.00 | 5236 | 0.00 | 0.00 | 5237 | 0.00 | 0.00 | 5238 | 0.00 | 0.00 |
| 5239 | 0.00 | 0.00 | 5241 | 0.00 | 0.00 | 5243 | 0.00 | 0.00 | 5252 | 0.00 | 0.00 | 5253 | 0.00 | 0.00 |
| 5254 | 0.00 | 0.00 | 5256 | 0.00 | 0.00 | 5262 | 0.00 | 0.00 | 5263 | 0.00 | 0.00 | 5265 | 0.00 | 0.00 |
| 5266 | 0.00 | 0.00 | 5268 | 0.00 | 0.00 | 5281 | 0.00 | 0.00 | 5283 | 0.00 | 0.00 | 5291 | 0.00 | 0.00 |
| 5293 | 0.00 | 0.00 | 5300 | 0.00 | 0.00 | 5301 | 0.00 | 0.00 | 5311 | 0.00 | 0.00 | 5313 | 0.00 | 0.00 |
| 5331 | 0.00 | 0.00 | 5333 | 0.00 | 0.00 | 5401 | 0.00 | 0.00 | 5402 | 0.00 | 0.00 | 5403 | 0.00 | 0.00 |
| 5406 | 0.00 | 0.00 | 5408 | 0.00 | 0.00 | 5409 | 0.00 | 0.00 | 5410 | 0.00 | 0.00 | 5411 | 0.00 | 0.00 |
| 5412 | 0.00 | 0.00 | 5413 | 0.00 | 0.00 | 5414 | 0.00 | 0.00 | 5415 | 0.00 | 0.00 | 5416 | 0.00 | 0.00 |
| 5417 | 0.00 | 0.00 | 5418 | 0.00 | 0.00 | 5419 | 0.00 | 0.00 | 5421 | 0.00 | 0.00 | 5422 | 0.00 | 0.00 |
| 5423 | 0.00 | 0.00 | 5424 | 0.00 | 0.00 | 5426 | 0.00 | 0.00 | 5428 | 0.00 | 0.00 | 5431 | 0.00 | 0.00 |
| 5433 | 0.00 | 0.00 | 5441 | 0.00 | 0.00 | 5443 | 0.00 | 0.00 | 5445 | 0.00 | 0.00 | 5446 | 0.00 | 0.00 |
| 5450 | 0.00 | 0.00 | 5451 | 0.00 | 0.00 | 5452 | 0.00 | 0.00 | 5453 | 0.00 | 0.00 | 5454 | 0.00 | 0.00 |
| 5455 | 0.00 | 0.00 | 5456 | 0.00 | 0.00 | 5457 | 0.00 | 0.00 | 5458 | 0.00 | 0.00 | 5461 | 0.00 | 0.00 |
| 5463 | 0.00 | 0.00 | 5464 | 0.00 | 0.00 | 5465 | 0.00 | 0.00 | 5468 | 0.00 | 0.00 | 5471 | 0.00 | 0.00 |
| 5473 | 0.00 | 0.00 | 5474 | 0.00 | 0.00 | 5475 | 0.00 | 0.00 | 5476 | 0.00 | 0.00 | 5478 | 0.00 | 0.00 |
| 5480 | 0.00 | 0.00 | 5481 | 0.00 | 0.00 | 5482 | 0.00 | 0.00 | 5483 | 0.00 | 0.00 | 5484 | 0.00 | 0.00 |
| 5485 | 0.00 | 0.00 | 5487 | 0.00 | 0.00 | 5488 | 0.00 | 0.00 | 5491 | 0.00 | 0.00 | 5492 | 0.00 | 0.00 |
| 5493 | 0.00 | 0.00 | 5494 | 0.00 | 0.00 | 5495 | 0.00 | 0.00 | 5496 | 0.00 | 0.00 | 5497 | 0.00 | 0.00 |
| 5498 | 0.00 | 0.00 | 5499 | 0.00 | 0.00 | 5500 | 0.00 | 0.00 | 5501 | 0.00 | 0.00 | 5502 | 0.00 | 0.00 |
| 5503 | 0.00 | 0.00 | 5504 | 0.00 | 0.00 | 5505 | 0.00 | 0.00 | 5506 | 0.00 | 0.00 | 5507 | 0.00 | 0.00 |
| 5508 | 0.00 | 0.00 | 5509 | 0.00 | 0.00 | 5510 | 0.00 | 0.00 | 5511 | 0.00 | 0.00 | 5512 | 0.00 | 0.00 |
| 5513 | 0.00 | 0.00 | 5514 | 0.00 | 0.00 | 5515 | 0.00 | 0.00 | 5516 | 0.00 | 0.00 | 5517 | 0.00 | 0.00 |
| 5518 | 0.00 | 0.00 | 5519 | 0.00 | 0.00 | 5520 | 0.00 | 0.00 | 5521 | 0.00 | 0.00 | 5522 | 0.00 | 0.00 |
| 5523 | 0.00 | 0.00 | 5524 | 0.00 | 0.00 | 5525 | 0.00 | 0.00 | 5526 | 0.00 | 0.00 | 5527 | 0.00 | 0.00 |
| 5528 | 0.00 | 0.00 | 5531 | 0.00 | 0.00 | 5533 | 0.00 | 0.00 | 5535 | 0.00 | 0.00 | 5538 | 0.00 | 0.00 |
| 5541 | 0.00 | 0.00 | 5542 | 0.00 | 0.00 | 5543 | 0.00 | 0.00 | 5544 | 0.00 | 0.00 | 5545 | 0.00 | 0.00 |
| 5546 | 0.00 | 0.00 | 5547 | 0.00 | 0.00 | 5548 | 0.00 | 0.00 | 5549 | 0.00 | 0.00 | 5550 | 0.00 | 0.00 |
| 5551 | 0.00 | 0.00 | 5556 | 0.00 | 0.00 | 5557 | 0.00 | 0.00 | 5561 | 0.00 | 0.00 | 5562 | 0.00 | 0.00 |
| 5563 | 0.00 | 0.00 | 5565 | 0.00 | 0.00 | 5568 | 0.00 | 0.00 | 5570 | 0.00 | 0.00 | 5571 | 0.00 | 0.00 |
| 5572 | 0.00 | 0.00 | 5573 | 0.00 | 0.00 | 5574 | 0.00 | 0.00 | 5580 | 0.00 | 0.00 | 5581 | 0.00 | 0.00 |
| 5582 | 0.00 | 0.00 | 5583 | 0.00 | 0.00 | 5584 | 0.00 | 0.00 | 5585 | 0.00 | 0.00 | 5586 | 0.00 | 0.00 |
| 5588 | 0.00 | 0.00 | 5589 | 0.00 | 0.00 | 5590 | 0.00 | 0.00 | 5591 | 0.00 | 0.00 | 5593 | 0.00 | 0.00 |
| 5596 | 0.00 | 0.00 | 5601 | 0.00 | 0.00 | 5602 | 0.00 | 0.00 | 5603 | 0.00 | 0.00 | 5605 | 0.00 | 0.00 |
| 5608 | 0.00 | 0.00 | 5621 | 0.00 | 0.00 | 5623 | 0.00 | 0.00 | 5624 | 0.00 | 0.00 | 5631 | 0.00 | 0.00 |
| 5633 | 0.00 | 0.00 | 5641 | 0.00 | 0.00 | 5643 | 0.00 | 0.00 | 5651 | 0.00 | 0.00 | 5652 | 0.00 | 0.00 |
| 5653 | 0.00 | 0.00 | 5654 | 0.00 | 0.00 | 5655 | 0.00 | 0.00 | 5656 | 0.00 | 0.00 | 5660 | 0.00 | 0.00 |
| 5661 | 0.00 | 0.00 | 5662 | 0.00 | 0.00 | 5663 | 0.00 | 0.00 | 5664 | 0.00 | 0.00 | 5667 | 0.00 | 0.00 |
| 5668 | 0.00 | 0.00 | 5671 | 0.00 | 0.00 | 5673 | 0.00 | 0.00 | 5681 | 0.00 | 0.00 | 5683 | 0.00 | 0.00 |
| 5701 | 0.00 | 0.00 | 5703 | 0.00 | 0.00 | 5704 | 0.00 | 0.00 | 5711 | 0.00 | 0.00 | 5713 | 0.00 | 0.00 |
| 5715 | 0.00 | 0.00 | 5716 | 0.00 | 0.00 | 5717 | 0.00 | 0.00 | 5718 | 0.00 | 0.00 | 5719 | 0.00 | 0.00 |
| 5720 | 0.00 | 0.00 | 5721 | 0.00 | 0.00 | 5722 | 0.00 | 0.00 | 5723 | 0.00 | 0.00 | 5724 | 0.00 | 0.00 |
| 5730 | 0.00 | 0.00 | 5731 | 0.00 | 0.00 | 5735 | 0.00 | 0.00 | 5736 | 0.00 | 0.00 | 5740 | 0.00 | 0.00 |
| 5750 | 0.00 | 0.00 | 5751 | 0.00 | 0.00 | 5753 | 0.00 | 0.00 | 5754 | 0.00 | 0.00 | 5757 | 0.00 | 0.00 |
| 5770 | 0.00 | 0.00 | 5771 | 0.00 | 0.00 | 5778 | 0.00 | 0.00 | 5782 | 0.00 | 0.00 | 5786 | 0.00 | 0.00 |
| 5788 | 0.00 | 0.00 | 5789 | 0.00 | 0.00 | 5791 | 0.00 | 0.00 | 5792 | 0.00 | 0.00 | 5793 | 0.00 | 0.00 |
| 5794 | 0.00 | 0.00 | 5802 | 0.00 | 0.00 | 5803 | 0.00 | 0.00 | 5804 | 0.00 | 0.00 | 5806 | 0.00 | 0.00 |
| 5807 | 0.00 | 0.00 | 5808 | 0.00 | 0.00 | 5809 | 0.00 | 0.00 | 5810 | 0.00 | 0.00 | 5812 | 0.00 | 0.00 |

ANUAL 06/07 * SETEMBRO 2006 PESADA S/SE 19H N/NE 19H * ANAT0 - FSE - C13
RELATORIO DE ERROS DE POTENCIA

| BARRA NUM. | ERRO DE POTENCIA MW | Mvar | BARRA NUM. | ERRO DE POTENCIA MW | Mvar | BARRA NUM. | ERRO DE POTENCIA MW | Mvar | BARRA NUM. | ERRO DE POTENCIA MW | Mvar | BARRA NUM. | ERRO DE POTENCIA MW | Mvar |
|---|---|---|---|---|---|---|---|---|---|---|---|---|---|---|
| 5817 | 0.00 | 0.00 | 5821 | 0.00 | 0.00 | 5822 | 0.00 | 0.00 | 5824 | 0.00 | 0.00 | 5826 | 0.00 | 0.00 |
| 5827 | 0.00 | 0.00 | 5828 | 0.00 | 0.00 | 5830 | 0.00 | 0.00 | 5831 | 0.00 | 0.00 | 5842 | 0.00 | 0.00 |
| 5843 | 0.00 | 0.00 | 5846 | 0.00 | 0.00 | 5847 | 0.00 | 0.00 | 5848 | 0.00 | 0.00 | 5849 | 0.00 | 0.00 |
| 5852 | 0.00 | 0.00 | 5856 | 0.00 | 0.00 | 5863 | 0.00 | 0.00 | 5864 | 0.00 | 0.00 | 5865 | 0.00 | 0.00 |
| 5871 | 0.00 | 0.00 | 5872 | 0.00 | 0.00 | 5873 | 0.00 | 0.00 | 5875 | 0.00 | 0.00 | 5881 | 0.00 | 0.00 |
| 5882 | 0.00 | 0.00 | 5883 | 0.00 | 0.00 | 5886 | 0.00 | 0.00 | 5887 | 0.00 | 0.00 | 5888 | 0.00 | 0.00 |
| 5891 | 0.00 | 0.00 | 5893 | 0.00 | 0.00 | 5902 | 0.00 | 0.00 | 5904 | 0.00 | 0.00 | 5910 | 0.00 | 0.00 |
| 5911 | 0.00 | 0.00 | 5915 | 0.00 | 0.00 | 5918 | 0.00 | 0.00 | 5920 | 0.00 | 0.00 | 5921 | 0.00 | 0.00 |
| 5922 | 0.00 | 0.00 | 5941 | 0.00 | 0.00 | 5944 | 0.00 | 0.00 | 5961 | 0.00 | 0.00 | 5963 | 0.00 | 0.00 |
| 5965 | 0.00 | 0.00 | 5970 | 0.00 | 0.00 | 5971 | 0.00 | 0.00 | 5972 | 0.00 | 0.00 | 5973 | 0.00 | 0.00 |
| 5974 | 0.00 | 0.00 | 5975 | 0.00 | 0.00 | 5976 | 0.00 | 0.00 | 5977 | 0.00 | 0.00 | 5979 | 0.00 | 0.00 |
| 6200 | 0.00 | 0.00 | 6201 | 0.00 | 0.00 | 6202 | 0.00 | 0.00 | 6203 | 0.00 | 0.00 | 6233 | 0.00 | 0.00 |
| 6243 | 0.00 | 0.00 | 6245 | 0.00 | 0.00 | 6250 | 0.00 | 0.00 | 6251 | 0.00 | 0.00 | 6252 | 0.00 | 0.00 |
| 6253 | 0.00 | 0.00 | 6254 | 0.00 | 0.00 | 6255 | 0.00 | 0.00 | 6256 | 0.00 | 0.00 | 6257 | 0.00 | 0.00 |
| 6258 | 0.00 | 0.00 | 6259 | 0.00 | 0.00 | 6260 | 0.00 | 0.00 | 6261 | 0.00 | 0.00 | 6263 | 0.00 | 0.00 |
| 6264 | 0.00 | 0.00 | 6268 | 0.00 | 0.00 | 6270 | 0.00 | 0.00 | 6271 | 0.00 | 0.00 | 6283 | 0.00 | 0.00 |
| 6285 | 0.00 | 0.00 | 6286 | 0.00 | 0.00 | 6287 | 0.00 | 0.00 | 6294 | 0.00 | 0.00 | 6295 | 0.00 | 0.00 |
| 6296 | 0.00 | 0.00 | 6297 | 0.00 | 0.00 | 6298 | 0.00 | 0.00 | 6299 | 0.00 | 0.00 | 6300 | 0.00 | 0.00 |
| 6301 | 0.00 | 0.00 | 6311 | 0.00 | 0.00 | 6313 | 0.00 | 0.00 | 6321 | 0.00 | 0.00 | 6331 | 0.00 | 0.00 |
| 6333 | 0.00 | 0.00 | 6341 | 0.00 | 0.00 | 6342 | 0.00 | 0.00 | 6343 | 0.00 | 0.00 | 6344 | 0.00 | 0.00 |
| 6345 | 0.00 | 0.00 | 6346 | 0.00 | 0.00 | 6347 | 0.00 | 0.00 | 6348 | 0.00 | 0.00 | 6349 | 0.00 | 0.00 |
| 6350 | 0.00 | 0.00 | 6351 | 0.00 | 0.00 | 6352 | 0.00 | 0.00 | 6353 | 0.00 | 0.00 | 6354 | 0.00 | 0.00 |
| 6355 | 0.00 | 0.00 | 6356 | 0.00 | 0.00 | 6358 | 0.00 | 0.00 | 6359 | 0.00 | 0.00 | 6361 | 0.00 | 0.00 |
| 6363 | 0.00 | 0.00 | 6365 | 0.00 | 0.00 | 6368 | 0.00 | 0.00 | 6369 | 0.00 | 0.00 | 6398 | 0.00 | 0.00 |
| 6400 | 0.00 | 0.00 | 6401 | 0.00 | 0.00 | 6402 | 0.00 | 0.00 | 6403 | 0.00 | 0.00 | 6404 | 0.00 | 0.00 |
| 6405 | 0.00 | 0.00 | 6406 | 0.00 | 0.00 | 6407 | 0.00 | 0.00 | 6408 | 0.00 | 0.00 | 6409 | 0.00 | 0.00 |
| 6410 | 0.00 | 0.00 | 6411 | 0.00 | 0.00 | 6412 | 0.00 | 0.00 | 6413 | 0.00 | 0.00 | 6414 | 0.00 | 0.00 |
| 6415 | 0.00 | 0.00 | 6416 | 0.00 | 0.00 | 6417 | 0.00 | 0.00 | 6418 | 0.00 | 0.00 | 6419 | 0.00 | 0.00 |
| 6420 | 0.00 | 0.00 | 6421 | 0.00 | 0.00 | 6422 | 0.00 | 0.00 | 6423 | 0.00 | 0.00 | 6424 | 0.00 | 0.00 |
| 6425 | 0.00 | 0.00 | 6430 | 0.00 | 0.00 | 6444 | 0.00 | 0.00 | 6451 | 0.00 | 0.00 | 6452 | 0.00 | 0.00 |
| 6453 | 0.00 | 0.00 | 6454 | 0.00 | 0.00 | 6455 | 0.00 | 0.00 | 6456 | 0.00 | 0.00 | 6457 | 0.00 | 0.00 |
| 6458 | 0.00 | 0.00 | 6459 | 0.00 | 0.00 | 6460 | 0.00 | 0.00 | 6461 | 0.00 | 0.00 | 6462 | 0.00 | 0.00 |
| 6463 | 0.00 | 0.00 | 6464 | 0.00 | 0.00 | 6465 | 0.00 | 0.00 | 6467 | 0.00 | 0.00 | 6468 | 0.00 | 0.00 |
| 6471 | 0.00 | 0.00 | 6472 | 0.00 | 0.00 | 6481 | 0.00 | 0.00 | 6482 | 0.00 | 0.00 | 6489 | 0.00 | 0.00 |
| 6491 | 0.00 | 0.00 | 6492 | 0.00 | 0.00 | 6493 | 0.00 | 0.00 | 6494 | 0.00 | 0.00 | 6495 | 0.00 | 0.00 |
| 6497 | 0.00 | 0.00 | 6498 | 0.00 | 0.00 | 6507 | 0.00 | 0.00 | 6508 | 0.00 | 0.00 | 6509 | 0.00 | 0.00 |
| 6510 | 0.00 | 0.00 | 6511 | 0.00 | 0.00 | 6512 | 0.00 | 0.00 | 6513 | 0.00 | 0.00 | 6514 | 0.00 | 0.00 |
| 6515 | 0.00 | 0.00 | 6517 | 0.00 | 0.00 | 6521 | 0.00 | 0.00 | 6523 | 0.00 | 0.00 | 6525 | 0.00 | 0.00 |
| 6528 | 0.00 | 0.00 | 6531 | 0.00 | 0.00 | 6534 | 0.00 | 0.00 | 6541 | 0.00 | 0.00 | 6542 | 0.00 | 0.00 |
| 6543 | 0.00 | 0.00 | 6544 | 0.00 | 0.00 | 6545 | 0.00 | 0.00 | 6548 | 0.00 | 0.00 | 6549 | 0.00 | 0.00 |
| 6561 | 0.00 | 0.00 | 6562 | 0.00 | 0.00 | 6564 | 0.00 | 0.00 | 6565 | 0.00 | 0.00 | 6700 | 0.00 | 0.00 |
| 6701 | 0.00 | 0.00 | 6702 | 0.00 | 0.00 | 6703 | 0.00 | 0.00 | 7100 | 0.00 | 0.00 | 7101 | 0.00 | 0.00 |
| 7102 | 0.00 | 0.00 | 7103 | 0.00 | 0.00 | 7104 | 0.00 | 0.00 | 7110 | 0.00 | 0.00 | 7111 | 0.00 | 0.00 |
| 7112 | 0.00 | 0.00 | 7200 | 0.00 | 0.00 | 7201 | 0.00 | 0.00 | 7202 | 0.00 | 0.00 | 7203 | 0.00 | 0.00 |
| 7204 | 0.00 | 0.00 | 7205 | 0.00 | 0.00 | 7206 | 0.00 | 0.00 | 7207 | 0.00 | 0.00 | 7208 | 0.00 | 0.00 |
| 7236 | 0.00 | 0.00 | 7237 | 0.00 | 0.00 | 7300 | 0.00 | 0.00 | 7301 | 0.00 | 0.00 | 7302 | 0.00 | 0.00 |
| 7303 | 0.00 | 0.00 | 7304 | 0.00 | 0.00 | 7591 | 0.00 | 0.00 | 7592 | 0.00 | 0.00 | 7593 | 0.00 | 0.00 |
| 7594 | 0.00 | 0.00 | 8001 | 0.00 | 0.00 | 8002 | 0.00 | 0.00 | 8003 | 0.00 | 0.00 | 8004 | 0.00 | 0.00 |
| 9001 | 0.00 | 0.00 | 9005 | 0.00 | 0.00 | 9006 | 0.00 | 0.00 | 9007 | 0.00 | 0.00 | 9008 | 0.00 | 0.00 |
| 9009 | 0.00 | 0.00 | 9010 | 0.00 | 0.00 | 9011 | 0.00 | 0.00 | 9020 | 0.00 | 0.00 | 9030 | 0.00 | 0.00 |

ANUAL 06/07 * SETEMBRO 2006 PESADA S/SE 19H N/NE 19H * ANAT0 - FSE - C13
RELATORIO DE ERROS DE POTENCIA

| BARRA NUM. | ERRO DE POTENCIA MW | Mvar | BARRA NUM. | ERRO DE POTENCIA MW | Mvar | BARRA NUM. | ERRO DE POTENCIA MW | Mvar | BARRA NUM. | ERRO DE POTENCIA MW | Mvar | BARRA NUM. | ERRO DE POTENCIA MW | Mvar |
|---|---|---|---|---|---|---|---|---|---|---|---|---|---|---|
| 9031 | 0.00 | 0.00 | 9032 | 0.00 | 0.00 | 9033 | 0.00 | 0.00 | 9036 | 0.00 | 0.00 | 9040 | 0.00 | 0.00 |
| 9045 | 0.00 | 0.00 | 9201 | 0.00 | 0.00 | 9202 | 0.00 | 0.00 | 9203 | 0.00 | 0.00 | 9204 | 0.00 | 0.00 |
| 9205 | 0.00 | 0.00 | 9206 | 0.00 | 0.00 | 9207 | 0.00 | 0.00 | 9208 | 0.00 | 0.00 | 9209 | 0.00 | 0.00 |
| 9210 | 0.00 | 0.00 | 9211 | 0.00 | 0.00 | 9212 | 0.00 | 0.00 | 9241 | 0.00 | 0.00 | 9242 | 0.00 | 0.00 |
| 9243 | 0.00 | 0.00 | 9244 | 0.00 | 0.00 | 9245 | 0.00 | 0.00 | 9246 | 0.00 | 0.00 | 9247 | 0.00 | 0.00 |
| 9248 | 0.00 | 0.00 | 9249 | 0.00 | 0.00 | 9250 | 0.00 | 0.00 | 9259 | 0.00 | 0.00 | 9279 | 0.00 | 0.00 |
| 9280 | 0.00 | 0.00 | 9281 | 0.00 | 0.00 | 9282 | 0.00 | 0.00 | 9284 | 0.00 | 0.00 | 9285 | 0.00 | 0.00 |
| 9286 | 0.00 | 0.00 | 9321 | 0.00 | 0.00 | 9322 | 0.00 | 0.00 | 9323 | 0.00 | 0.00 | 9324 | 0.00 | 0.00 |
| 9325 | 0.00 | 0.00 | 9326 | 0.00 | 0.00 | 9327 | 0.00 | 0.00 | 9328 | 0.00 | 0.00 | 9329 | 0.00 | 0.00 |
| 9330 | 0.00 | 0.00 | 9331 | 0.00 | 0.00 | 9332 | 0.00 | 0.00 | 9333 | 0.00 | 0.00 | 9334 | 0.00 | 0.00 |
| 9335 | 0.00 | 0.00 | 9336 | 0.00 | 0.00 | 9337 | 0.00 | 0.00 | 9338 | 0.00 | 0.00 | 9339 | 0.00 | 0.00 |
| 9340 | 0.00 | 0.00 | 9341 | 0.00 | 0.00 | 9342 | 0.00 | 0.00 | 9388 | 0.00 | 0.00 | 9437 | 0.00 | 0.00 |
| 9510 | 0.00 | 0.00 | 9513 | 0.00 | 0.00 | 9515 | 0.00 | 0.00 | 9517 | 0.00 | 0.00 | 9518 | 0.00 | 0.00 |
| 9519 | 0.00 | 0.00 | 9520 | 0.00 | 0.00 | 9860 | 0.00 | 0.00 | | | | | | |



ANUAL 06/07 * SETEMBRO 2006 PESADA S/SE 19H N/NE 19H * ANAT0 - FSE - C13
RELATORIO COMPLETO DO SISTEMA * AREA 1 * * FURNAS *

| DA BARRA NUM. KV TIPO NOME | TENSAO MOD/ ANG | GERACAO MW/ Mvar | INJ EQV MW/ Mvar | CARGA MW/ Mvar | ELO CC MW/ Mvar FLUXO % | SHUNT Mvar/ EQUIV SHUNT L | MOTOR MW/ Mvar | PARA BARRA NUM. | NOME | NC | FLUXOS MW | Mvar | MVA/V_d | TAP | DEFAS | TIE |
|---|---|---|---|---|---|---|---|---|---|---|---|---|---|---|---|---|
| 12 1 1 | 1.030 | 750.0 | 0.0 | 5.8 | 0.0 | 0.0 | 0.0 | | | | | | | | | |
| LCBARRET-5GR | -83.5 | -69.1 | 0.0 | 0.0 | 0.0 | 0.0 | 0.0 | | | | | | | | | |
| | | | | | 63.9% | | | 134 | LBARRETO-345 | 1 | 744.2 | -69.1 | 725.7 | | | |
| 13 1 -1 | 1.040 | 0.0 | 0.0 | 0.0 | 0.0 | 0.0 | 0.0 | | | | | | | | | |
| LCBARRET-000 | -87.7 | 0.0 | 0.0 | 0.0 | 0.0 | 0.0 | 0.0 | | | | | | | | | |
| | | | | | 0.0% | | | 134 | LBARRETO-345 | 1 | 0.0 | 0.0 | 0.0 | | | |
| 14 1 1 | 1.000 | 41.0 | 0.0 | 1.1 | 0.0 | 0.0 | 0.0 | | | | | | | | | |
| FUNIL-1--1GR | -105.6 | 6.8 | 0.0 | 0.0 | 0.0 | 0.0 | 0.0 | | | | | | | | | |
| | | | | | 15.0% | | | 182 | FUNIL----138 | 1 | 39.9 | 6.8 | 40.4 | | | |
| 15 1 1 | 1.020 | 82.0 | 0.0 | 0.0 | 0.0 | 0.0 | 0.0 | | | | | | | | | |
| FUNIL-2--2GR | -105.6 | 49.8 | 0.0 | 0.0 | 0.0 | 0.0 | 0.0 | | | | | | | | | |
| | | | | | 52.3% | | | 191 | FUNIL--2-138 | 1 | 82.0 | 49.8 | 94.1 | | | |
| 16 1 1 | 1.030 | 900.0 | 0.0 | 7.5 | 0.0 | 0.0 | 0.0 | | | | | | | | | |
| FURNAS---6GR | -85.5 | -76.8 | 0.0 | 0.0 | 0.0 | 0.0 | 0.0 | | | | | | | | | |
| | | | | | 67.9% | | | 136 | FURNAS---345 | 1 | 892.5 | -76.8 | 869.7 | | | |
| 17 1 -1 | 1.045 | 0.0 | 0.0 | 0.0 | 0.0 | 0.0 | 0.0 | | | | | | | | | |
| FURNAS---000 | -91.6 | 0.0 | 0.0 | 0.0 | 0.0 | 0.0 | 0.0 | | | | | | | | | |
| | | | | | 0.0% | | | 136 | FURNAS---345 | 1 | 0.0 | 0.0 | 0.0 | | | |
| 18 1 1 | 1.000 | 1400.0 | 0.0 | 6.5 | 0.0 | 0.0 | 0.0 | | | | | | | | | |
| ITUMBIAR-4GR | -73.4 | -245.5 | 0.0 | 0.0 | 0.0 | 0.0 | 0.0 | | | | | | | | | |
| | | | | | 59.0% | | | 210 | ITUMBIAR-500 | 1 | 1393.5 | -245.5 | 1415.0 | | | |
| 19 1 -1 | 1.034 | 0.0 | 0.0 | 0.0 | 0.0 | 0.0 | 0.0 | | | | | | | | | |
| ITUMBIAR-000 | -81.1 | 0.0 | 0.0 | 0.0 | 0.0 | 0.0 | 0.0 | | | | | | | | | |
| | | | | | 0.0% | | | 210 | ITUMBIAR-500 | 1 | 0.0 | 0.0 | 0.0 | | | |

```
  20    1  1   1.030   900.0     0.0     4.3     0.0     0.0     0.0
 MARIMBON-8GR   -71.9  -590.9     0.0     0.0     0.0     0.0     0.0
                                                68.5%                  100 MARIMBON-500  1   895.7  -590.9  1041.8
  21    1  1   1.030   173.0     0.0     0.0     0.0     0.0     0.0
 MANSO----4GR   -59.8    18.1     0.0     0.0     0.0     0.0     0.0
                                                 1.7%                 4592 MANSO----230  1   173.0    18.1   168.9               45
  22    1  1   1.030   259.0     0.0     1.8     0.0     0.0     0.0
 M.MOR.A--5GR   -80.5     7.4     0.0     0.0     0.0     0.0     0.0
                                                66.1%                  131 M.MORAES-345  1   257.2     7.4   249.8
  24    1  1   0.985   144.0     0.0     1.2     0.0     0.0     0.0
 M.MOR.B--4GR   -85.6    21.5     0.0     0.0     0.0     0.0     0.0
                                                73.3%                  187 M.MORAES-138  1   142.8    21.5   146.6
CEPEL - CENTRO DE PESQUISAS DE ENERGIA ELETRICA - PROGRAMA DE ANALISE DE REDES - V08MAR05A                                PAG.  17

ANUAL 06/07 * SETEMBRO 2006 PESADA S/SE 19H N/NE 19H * ANAT0 - FSE - C13
RELATORIO COMPLETO DO SISTEMA * AREA  1 * *              FURNAS             *

X----------------- D A D O S  -  B A R R A -------------------------X------------ F L U X O S  -  C I R C U I T O S ------------X
 DA BARRA      TENSAO GERACAO INJ EQV  CARGA   ELO CC  SHUNT    MOTOR
 NUM. KV TIPO   MOD/     MW/     MW/     MW/     MW/   Mvar/     MW/
     NOME       ANG     Mvar    Mvar    Mvar    Mvar   EQUIV    Mvar  PARA BARRA                    FLUXOS
                                                FLUXO % SHUNT L         NUM.     NOME     NC     MW    Mvar  MVA/V_d   TAP  DEFAS TIE
X------------X-------X-------X-------X-------X-------X-------X-------X----X------------X--X-------X-------X-------X------X-----X---X

  28    1  1   1.040   262.0     0.0     1.5     0.0     0.0     0.0
 P.COLOMB-4GR   -78.5    51.7     0.0     0.0     0.0     0.0     0.0
                                                70.9%                  190 PCOLOMBI-138  1   260.4    51.7   255.3
  30    1 -1   1.011     0.0     0.0     0.0     0.0     0.0     0.0
 SCRUZ-19-000  -114.9     0.0     0.0     0.0     0.0     0.0     0.0
                                                 0.0%                  184 S.CRUZ---138  1     0.0     0.0     0.0
  31    1 -1   0.967     0.0     0.0     0.0     0.0     0.0     0.0
 SCRUZ-13-000  -114.9     0.0     0.0     0.0     0.0     0.0     0.0
                                                 0.0%                  184 S.CRUZ---138  1     0.0     0.0     0.0
  32   14  1   1.000   125.0     0.0     0.0     0.0     0.0     0.0
 SCRUZ-16-1GR  -110.1   -10.7     0.0     0.0     0.0     0.0     0.0
                                                62.7%                  184 S.CRUZ---138  1   125.0   -10.7   125.5
  33    1 -1   1.030     0.0     0.0     0.0     0.0     0.0     0.0
 UT-CAMPOS1GR  -122.8     0.0     0.0     0.0     0.0     0.0     0.0
                                                 0.0%                   34 UT-CAMPOS345  1     0.0     0.0     0.0
                                                 0.0%                   34 UT-CAMPOS345  2     0.0     0.0     0.0
  34    1  0   1.030     0.0     0.0     0.0     0.0     0.0     0.0
 UT-CAMPOS345  -122.8     0.0     0.0     0.0     0.0     0.0     0.0
                                                 0.0%                   33 UT-CAMPOS1GR  1     0.0     0.0     0.0 1.000F
                                                 0.0%                   33 UT-CAMPOS1GR  2     0.0     0.0     0.0 1.000F
                                                 0.0%                  147 CAMPOS---345  1     0.0     0.0     0.0
  35    1  1   1.000   305.0     0.0     0.0     0.0     0.0     0.0
 CORUMBA--3GR   -79.0   -49.7     0.0     0.0     0.0     0.0     0.0
                                                74.1%                  220 CORUMBA--345  1   305.0   -49.7   309.0
  36    1  1   0.990   900.0     0.0     0.0     0.0     0.0     0.0
 S.MESA---3GR   -95.8  -411.1     0.0     0.0     0.0     0.0     0.0
                                                70.5%                  235 S.MESA---500  1   900.0  -411.1   999.5
  38    1  1   1.033     0.0     0.0     1.3     0.0     0.0     0.0
 GRAJAU-2-1CS  -111.7    10.9     0.0     0.0     0.0     0.0     0.0
                                                 5.3%                  179 GR--FIC2-T54 54    -1.3    10.9    10.6 1.000F
  39    1  1   1.029     0.0     0.0     0.0     0.0     0.0     0.0
 B.GERAL2-1CS  -106.8    -0.4     0.0     0.0     0.0     0.0     0.0
                                                 1.7%                  207 BGT2e2-CI20%  1     0.0    -0.4     0.3 1.000F
  40    1  1   1.029     0.0     0.0     0.0     0.0     0.0     0.0
 B.GERAL1-1CS  -106.8    -0.4     0.0     0.0     0.0     0.0     0.0
                                                 1.8%                  208 BGT1e2-CI20%  1     0.0    -0.4     0.4 1.000F
```

ANUAL 06/07 * SETEMBRO 2006 PESADA S/SE 19H N/NE 19H * ANAT0 - FSE - C13
RELATORIO COMPLETO DO SISTEMA * AREA 1 * * FURNAS *

```
X----------------- D A D O S  -  B A R R A ------------------------X------------ F L U X O S  -  C I R C U I T O S ------------X
 DA BARRA      TENSAO GERACAO INJ EQV  CARGA   ELO CC  SHUNT    MOTOR
 NUM. KV TIPO   MOD/     MW/     MW/     MW/     MW/   Mvar/     MW/
     NOME       ANG     Mvar    Mvar    Mvar    Mvar   EQUIV    Mvar  PARA BARRA                    FLUXOS
                                                FLUXO % SHUNT L         NUM.     NOME     NC     MW    Mvar  MVA/V_d   TAP  DEFAS TIE
X------------X-------X-------X-------X-------X-------X-------X-------X----X------------X--X-------X-------X-------X------X-----X---X

   41    1 -1   1.040     0.0     0.0     0.0     0.0     0.0     0.0
 B.SUL----000   -99.0     0.0     0.0     0.0     0.0     0.0     0.0
                                                 0.0%                    111 BSUL---CI71%  1     0.0     0.0     0.0
   42    1  0   0.992     0.0     0.0     0.0     0.0     0.0     0.0
 BAND10.5-CE1   -95.2   -25.0     0.0     0.0     0.0     0.0     0.0
                                                25.2%                    218 BANDEIRA-345  1     0.0   -25.0    25.2
   43    1  0   0.992     0.0     0.0     0.0     0.0     0.0     0.0
 BAND10.5-CE2   -95.2   -25.0     0.0     0.0     0.0     0.0     0.0
                                                25.2%                    218 BANDEIRA-345  1     0.0   -25.0    25.2
   44    1  1   1.033     0.0     0.0     1.3     0.0     0.0     0.0
 GRAJAU-1-1CS  -111.7    10.9     0.0     0.0     0.0     0.0     0.0
                                                 5.3%                    110 GR--FIC1-T52 52    -1.3    10.9    10.6 1.000F
   45    1  1   0.970     0.0     0.0     0.0     0.0     0.0     0.0
 VITORIA--1CS  -134.4    -9.7     0.0     0.0     0.0     0.0     0.0
                                                16.8%                    151 VITOR--CI57%  1     0.0    -9.7    10.1
   46    1  0   1.024     0.0     0.0     0.0     0.0     0.0     0.0
 CAMPOS----CE  -122.8    -4.3     0.0     0.0     0.0     0.0     0.0
                                                 4.2%                    147 CAMPOS---345  1     0.0    -4.3     4.2
   48    1  1   1.026     0.0     0.0     0.0     0.0     0.0     0.0
 IBIUNA---4CS   -79.6  -101.7     0.0     0.0     0.0     0.0     0.0
                                                 9.4%                     86 IBIUNA---345  1     0.0  -101.7    99.1
   50    1  1   0.997     0.0     0.0     0.5     0.0     0.0     0.0
 T.PRETO--1CS   -86.4    36.3     0.0     0.0     0.0     0.0     0.0
                                                 7.3%                     81 TPFIC345-AT4  4    -0.5    36.3    36.4 1.000F
   55    1  0   0.956     0.0     0.0     0.0     0.0     0.0     0.0
 BALTO13.8-CE  -106.4   -16.6     0.0     0.0     0.0     0.0     0.0
                                                52.5%                    229 B.ALTO---230  1     0.0   -16.6    17.3
   56   69  0   1.028     0.0     0.0     0.0     0.0     0.0     0.0
 IVAIP-III-69   -57.6     0.0     0.0     0.0     0.0     0.0     0.0
                                                 0.0%                     59 IVAIPOR-FIC3  1     0.0     0.0     0.0 1.000F
   57   69  0   1.028     0.0     0.0     0.0     0.0     0.0     0.0
 IVAIP--II-69   -57.5     0.0     0.0     0.0     0.0     0.0     0.0
                                                 0.0%                     58 IVAIPOR-FIC2  1     0.0     0.0     0.0 1.000F
```



ANUAL 06/07 * SETEMBRO 2006 PESADA S/SE 19H N/NE 19H * ANAT0 - FSE - C13
RELATORIO COMPLETO DO SISTEMA * AREA 1 * * FURNAS *

```
X----------------- D A D O S  -  B A R R A ------------------------X------------ F L U X O S  -  C I R C U I T O S ------------X
 DA BARRA      TENSAO GERACAO INJ EQV  CARGA   ELO CC  SHUNT    MOTOR
 NUM. KV TIPO   MOD/     MW/     MW/     MW/     MW/   Mvar/     MW/
     NOME       ANG     Mvar    Mvar    Mvar    Mvar   EQUIV    Mvar  PARA BARRA                    FLUXOS
                                                FLUXO % SHUNT L         NUM.     NOME     NC     MW    Mvar  MVA/V_d   TAP  DEFAS TIE
X------------X-------X-------X-------X-------X-------X-------X-------X----X------------X--X-------X-------X-------X------X-----X---X

   58    1  0   1.028     0.0     0.0     0.0     0.0     0.0     0.0
 IVAIPOR-FIC2   -57.5     0.0     0.0     0.0     0.0     0.0     0.0
                                                 0.0%                     57 IVAIP--II-69  1     0.0     0.0     0.0
```

```
                                                 19.4%                    65 IVAIPORA-765  1   323.4    58.5   319.7
                                                 19.4%                    66 IVAIPORA-525  1  -323.4   -58.5   319.7
  59   14  0   1.028     0.0     0.0     0.0     0.0     0.0     0.0
 IVAIPOR-FIC3   -57.6     0.0     0.0     0.0     0.0     0.0     0.0
                                                  0.0%                    56 IVAIP-III-69  1     0.0     0.0     0.0
                                                 18.6%                    65 IVAIPORA-765  1   309.6    55.9   306.1
                                                 18.6%                    66 IVAIPORA-525  1  -309.6   -55.9   306.1
  60  765  0   0.997     0.0     0.0     0.0     0.0     0.0     0.0
 F.IGUACU-765   -46.0     0.0     0.0     0.0     0.0     0.0     0.0                                -984.5 SHL
                                                 91.7%                    61 FOZ-500-60HZ  1 -1508.1    51.9  1513.2
                                                 89.0%                    61 FOZ-500-60HZ  2 -1463.5    50.3  1468.5
                                                 91.7%                    61 FOZ-500-60HZ  3 -1508.1    51.9  1513.2
                                                 91.7%                    61 FOZ-500-60HZ  4 -1508.1    51.9  1513.2
                                                 55.3%  -328.2            62 IV-FOZ-1-765  1  2032.1   -67.0  2038.9
                                                 54.8%  -328.2            63 IV-FOZ-2-765  1  2013.8   -66.6  2020.6
                                                 52.9%  -328.2            64 IV-FOZ-3-765  1  1941.9   -72.4  1948.7
  61  500  0   1.048     0.0     0.0     0.0     0.0     0.0     0.0
 FOZ-500-60HZ   -40.6     0.0     0.0     0.0     0.0     0.0     0.0
                                                 87.3%                    60 F.IGUACU-765  1  1508.1    90.8  1441.2 1.050F
                                                 84.8%                    60 F.IGUACU-765  2  1463.5    88.1  1398.5 1.050F
                                                 87.3%                    60 F.IGUACU-765  3  1508.1    90.8  1441.2 1.050F
                                                 87.3%                    60 F.IGUACU-765  4  1508.1    90.8  1441.2 1.050F
                                                 80.7%                  1106 ITAIPU60-500  1 -1461.9   -88.3  1397.0                17
                                                 81.9%                  1106 ITAIPU60-500  2 -1483.7   -89.5  1417.9                17
                                                 83.3%                  1106 ITAIPU60-500  3 -1510.6   -90.8  1443.5                17
                                                 84.5%                  1106 ITAIPU60-500  4 -1531.7   -91.9  1463.7                17
  62  765  0   1.039     0.0     0.0     0.0     0.0     0.0     0.0
 IV-FOZ-1-765   -67.1     0.0     0.0     0.0     0.0     0.0     0.0                                -162.0 SHL
                                                 53.1%  -162.0            60 F.IGUACU-765  1 -2000.5   359.7  1955.7
                                                 53.1%                    65 IVAIPORA-765  1  2000.5  -359.7  1955.7
  63  765  0   1.039     0.0     0.0     0.0     0.0     0.0     0.0
 IV-FOZ-2-765   -67.0     0.0     0.0     0.0     0.0     0.0     0.0                                -161.8 SHL
                                                 52.6%  -161.8            60 F.IGUACU-765  1 -1982.8   348.7  1938.2
                                                 52.6%                    65 IVAIPORA-765  1  1982.8  -348.7  1938.2
  64  765  0   1.035     0.0     0.0     0.0     0.0     0.0     0.0
 IV-FOZ-3-765   -66.8     0.0     0.0     0.0     0.0     0.0     0.0                                -160.8 SHL
                                                 50.7%  -160.8            60 F.IGUACU-765  1 -1912.3   292.9  1868.5
                                                 50.7%                    65 IVAIPORA-765  1  1912.3  -292.9  1868.5
CEPEL - CENTRO DE PESQUISAS DE ENERGIA ELETRICA - PROGRAMA DE ANALISE DE REDES - V08MAR05A                          PAG.  20

ANUAL 06/07 * SETEMBRO 2006 PESADA S/SE 19H N/NE 19H * ANAT0 - FSE - C13
RELATORIO COMPLETO DO SISTEMA * AREA  1 * *             FURNAS              *

X----------------- D A D O S  -  B A R R A ------------------------X------------ F L U X O S  -  C I R C U I T O S ------------X
 DA BARRA      TENSAO GERACAO INJ EQV  CARGA   ELO CC  SHUNT    MOTOR
 NUM. KV TIPO   MOD/     MW/     MW/     MW/     MW/   Mvar/     MW/
     NOME       ANG     Mvar    Mvar    Mvar    Mvar   EQUIV    Mvar  PARA BARRA                    FLUXOS
                                                FLUXO % SHUNT L         NUM.     NOME     NC     MW    Mvar  MVA/V_d   TAP  DEFAS TIE
X------------X-------X-------X-------X-------X-------X-------X-------X----X------------X--X-------X-------X-------X------X-----X---X

  65  765  0   1.024     0.0     0.0     0.0     0.0     0.0     0.0
 IVAIPORA-765   -59.0     0.0     0.0     0.0     0.0     0.0     0.0
                                                 19.4%                    58 IVAIPOR-FIC2  1  -323.4   -50.1   319.7 1.000F
                                                 18.6%                    59 IVAIPOR-FIC3  1  -309.6   -47.9   306.1 1.000F
                                                 53.1%                    62 IV-FOZ-1-765  1 -2000.5    73.2  1955.7
                                                 52.6%                    63 IV-FOZ-2-765  1 -1982.8    67.4  1938.2
                                                 50.7%                    64 IV-FOZ-3-765  1 -1912.3    31.4  1868.5
                                                 18.9%                    68 IVAIPOR-FIC1  1  -316.1   -48.9   312.5 1.000F
                                                 60.8%                    69 IV-ITA-1-765  1  2291.3   -10.5  2238.6
                                                 60.8%                    70 IV-ITA-2-765  1  2292.5    -3.0  2239.7
```

```
                                                 60.0%                    71 IV-ITA-3-765  1  2260.9   -11.6  2208.8
  66  525  0   1.030     0.0     0.0     0.0     0.0     0.0     0.0
IVAIPORA-525   -57.8     0.0     0.0     0.0     0.0     0.0     0.0
                                                 19.3%                    58 IVAIPOR-FIC2  1   323.4    56.7   318.8 1.003*
                                                 18.5%                    59 IVAIPOR-FIC3  1   309.6    54.3   305.3 1.003*
                                                 18.9%                    68 IVAIPOR-FIC1  1   316.4    55.5   311.9 1.003*
                                                 13.7%                   999 IvaiporE-525  1  -317.9   -44.9   311.8              20
                                                 13.7%                   999 IvaiporE-525  2  -317.9   -44.9   311.8              20
                                                 13.8%                   999 IvaiporE-525  3  -313.5   -76.7   313.4              20
  67   69  0   1.027     0.0     0.0     0.2     0.0     0.0     0.0
IVAIP---I-69   -57.8     0.0     0.0     0.0     0.0     0.0     0.0
                                                  0.0%                    68 IVAIPOR-FIC1  1    -0.2     0.0     0.2 1.000F
  68    1  0   1.027     0.0     0.0     0.0     0.0     0.0     0.0
IVAIPOR-FIC1   -57.8     0.0     0.0     0.0     0.0     0.0     0.0
                                                 18.9%                    65 IVAIPORA-765  1   316.1    55.7   312.5
                                                 19.0%                    66 IVAIPORA-525  1  -316.4   -55.7   312.8
                                                  0.0%                    67 IVAIP---I-69  1     0.2     0.0     0.2
  69  765  0   1.038     0.0     0.0     0.0     0.0     0.0     0.0
IV-ITA-1-765   -49.3     0.0     0.0     0.0     0.0     0.0     0.0                                -355.2 SHL
                                                 60.8%                    65 IVAIPORA-765  1 -2291.3  -379.4  2238.6
                                                 60.8%  -355.2            72 ITABERA--765  1  2291.3   379.4  2238.6
  70  765  0   1.038     0.0     0.0     0.0     0.0     0.0     0.0
IV-ITA-2-765   -49.3     0.0     0.0     0.0     0.0     0.0     0.0                                -355.6 SHL
                                                 60.8%                    65 IVAIPORA-765  1 -2292.5  -387.3  2239.7
                                                 60.8%  -355.6            72 ITABERA--765  1  2292.5   387.3  2239.7
  71  765  0   1.037     0.0     0.0     0.0     0.0     0.0     0.0
IV-ITA-3-765   -49.5     0.0     0.0     0.0     0.0     0.0     0.0                                -354.9 SHL
                                                 60.0%                    65 IVAIPORA-765  1 -2260.9  -368.0  2208.8
                                                 60.0%  -354.9            72 ITABERA--765  1  2260.9   368.0  2208.8
```



```
ANUAL 06/07 * SETEMBRO 2006 PESADA S/SE 19H N/NE 19H * ANAT0 - FSE - C13
RELATORIO COMPLETO DO SISTEMA * AREA  1 * *              FURNAS             *

X----------------- D A D O S  -  B A R R A ------------------------X------------ F L U X O S  -  C I R C U I T O S ------------X
 DA BARRA      TENSAO GERACAO INJ EQV  CARGA   ELO CC  SHUNT    MOTOR
 NUM. KV TIPO   MOD/     MW/     MW/     MW/     MW/   Mvar/     MW/
     NOME       ANG     Mvar    Mvar    Mvar    Mvar   EQUIV    Mvar  PARA BARRA                    FLUXOS
                                                FLUXO % SHUNT L         NUM.     NOME     NC     MW    Mvar  MVA/V_d   TAP  DEFAS TIE
X------------X-------X-------X-------X-------X-------X-------X-------X----X------------X--X-------X-------X-------X------X-----X---X

  72  765  0   1.016     0.0     0.0     0.0     0.0     0.0     0.0
ITABERA--765   -68.6     0.0     0.0     0.0     0.0     0.0     0.0                               -1022.7 SHL
                                                 60.8%  -340.9            69 IV-ITA-1-765  1 -2259.0   288.1  2240.6
                                                 60.9%  -340.9            70 IV-ITA-2-765  1 -2260.6   285.2  2241.9
                                                 60.0%  -340.9            71 IV-ITA-3-765  1 -2229.4   281.1  2210.9
                                                 61.7%                    73 ITA-TP-1-765  1  2292.5  -280.9  2272.5
                                                 61.7%                    74 ITA-TP-2-765  1  2293.6  -276.5  2273.0
                                                 58.3%                    75 ITA-TP-3-765  1  2162.9  -297.0  2148.0
  73  765  0   1.012     0.0     0.0     0.0     0.0     0.0     0.0
ITA-TP-1-765   -56.8     0.0     0.0     0.0     0.0     0.0     0.0
                                                 61.7%                    72 ITABERA--765  1 -2292.5  -191.6  2272.5
                                                 61.7%                    76 T.PRETO--765  1  2292.5   191.6  2272.5
  74  765  0   1.013     0.0     0.0     0.0     0.0     0.0     0.0
ITA-TP-2-765   -56.8     0.0     0.0     0.0     0.0     0.0     0.0
                                                 61.7%                    72 ITABERA--765  1 -2293.6  -196.2  2273.0
                                                 61.7%                    76 T.PRETO--765  1  2293.6   196.2  2273.0
  75  765  0   1.009     0.0     0.0     0.0     0.0     0.0     0.0
ITA-TP-3-765   -57.5     0.0     0.0     0.0     0.0     0.0     0.0
                                                 58.3%                    72 ITABERA--765  1 -2162.9  -125.2  2148.0
```

```
                                                                 58.3%                    76 T.PRETO--765  1  2162.9   125.2  2148.0
  76  765  0   0.968     0.0     0.0     0.0     0.0     0.0     0.0
 T.PRETO--765  -80.7     0.0     0.0     0.0     0.0     0.0     0.0                                   -927.6 SHL
                                                                 63.5%  -309.2            73 ITA-TP-1-765  1 -2252.7   224.5  2338.8
                                                                 63.5%  -309.2            74 ITA-TP-2-765  1 -2253.8   224.7  2339.9
                                                                 59.9%  -309.2            75 ITA-TP-3-765  1 -2128.4   191.5  2207.6
                                                                 60.8%                    77 T.PRETO--500  1   971.4   -18.1  1003.7
                                                                 59.0%                    77 T.PRETO--500  2   942.4   -17.6   973.8
                                                                 66.1%                    78 T.PRETO--345  5   948.9  -148.7   992.2
                                                                 66.1%                    78 T.PRETO--345  6   948.9  -148.7   992.2
                                                                 66.1%                    78 T.PRETO--345  7   948.9  -148.7   992.2
                                                                 59.3%                    80 TPFIC500-AT3  3   946.7   -17.6   978.2 1.000F
                                                                 64.6%                    81 TPFIC345-AT4  4   927.7  -141.3   969.5 1.000F
  77  500  0   1.083     0.0     0.0     0.0     0.0     0.0     0.0
 T.PRETO--500  -84.5     0.0     0.0     0.0     0.0     0.0     0.0
                                                                 54.6%                    76 T.PRETO--765  1  -971.4    83.6   900.2 1.115F
                                                                 52.9%                    76 T.PRETO--765  2  -942.4    81.1   873.3 1.115F
                                                                 53.2%                    80 TPFIC500-AT3  3  -946.7    81.5   877.3 1.115F
                                                                 50.9%                   104 C.PAULIS-500  1   908.7  -125.0   846.9
                                                                 31.0%                   104 C.PAULIS-500  2   908.7  -125.0   846.9
                                                                 57.8%                   598 TAUBATE--500  1  1043.2     3.9   963.2                05
CEPEL - CENTRO DE PESQUISAS DE ENERGIA ELETRICA - PROGRAMA DE ANALISE DE REDES - V08MAR05A                                          PAG.  22

ANUAL 06/07 * SETEMBRO 2006 PESADA S/SE 19H N/NE 19H * ANAT0 - FSE - C13
RELATORIO COMPLETO DO SISTEMA * AREA  1 * *              FURNAS              *

X----------------- D A D O S  -  B A R R A ------------------------X------------ F L U X O S  -  C I R C U I T O S ------------X
 DA BARRA      TENSAO GERACAO INJ EQV  CARGA   ELO CC  SHUNT    MOTOR
 NUM. KV TIPO   MOD/     MW/     MW/     MW/     MW/   Mvar/     MW/
     NOME       ANG     Mvar    Mvar    Mvar    Mvar   EQUIV    Mvar  PARA BARRA                    FLUXOS
                                                FLUXO % SHUNT L         NUM.     NOME     NC     MW    Mvar  MVA/V_d   TAP  DEFAS TIE
X------------X-------X-------X-------X-------X-------X-------X-------X----X------------X--X-------X-------X-------X------X-----X---X

  78  345  0   1.049     0.0     0.0     0.0     0.0  1980.2     0.0
 T.PRETO--345  -85.8     0.0     0.0     0.0     0.0     0.0     0.0
                                                                 62.2%                    76 T.PRETO--765  5  -948.9   237.3   932.5 1.064F
                                                                 62.2%                    76 T.PRETO--765  6  -948.9   237.3   932.5 1.064F
                                                                 62.2%                    76 T.PRETO--765  7  -948.9   237.3   932.5 1.064F
                                                                 60.2%                    81 TPFIC345-AT4  4  -927.2   191.9   902.7 1.064F
                                                                 37.5%                    86 IBIUNA---345  1  -451.4    32.1   431.4
                                                                 37.5%                    86 IBIUNA---345  2  -451.4    32.1   431.4
                                                                 55.9%                   449 ITAPETI--345  1   686.8   104.8   662.4                04
                                                                 55.9%                   449 ITAPETI--345  2   686.8   104.8   662.4                04
                                                                 44.0%                   464 LESTE----345  1   414.5    72.9   401.2                04
                                                                 44.5%                   464 LESTE----345  2   418.9    73.3   405.5                04
                                                                 42.2%                   464 LESTE----345  3   397.9    67.2   384.8                04
                                                                 55.5%                   471 BAIXADA--345  1   662.7   191.0   657.5                04
                                                                 58.9%                   471 BAIXADA--345  2   704.4   199.1   697.9                04
                                                                 76.5%                   471 BAIXADA--345  3   704.4   199.1   697.9                04
  79   69  0   0.972     0.0     0.0     0.0     0.0     0.0     0.0
 T.PRETO---69  -84.7     0.0     0.0     0.0     0.0     0.0     0.0
                                                                  0.0%                    80 TPFIC500-AT3  3     0.0     0.0     0.0 1.000F
  80    1  0   0.972     0.0     0.0     0.0     0.0     0.0     0.0
 TPFIC500-AT3  -84.7     0.0     0.0     0.0     0.0     0.0     0.0
                                                                 59.3%                    76 T.PRETO--765  3  -946.7    84.3   978.2
                                                                 59.3%                    77 T.PRETO--500  3   946.7   -84.3   978.2
                                                                  0.0%                    79 T.PRETO---69  3     0.0     0.0     0.0
  81    1  0   0.988     0.0     0.0     0.0     0.0     0.0     0.0
 TPFIC345-AT4  -86.4     0.0     0.0     0.0     0.0     0.0     0.0
                                                                  7.3%                    50 T.PRETO--1CS  4     0.5   -36.0    36.4
```

```
                                                 64.6%                  76 T.PRETO--765  4  -927.7   238.1   969.5
                                                 64.0%                  78 T.PRETO--345  4   927.2  -202.1   960.5
  85    1  0   1.018     0.0     0.0    60.0  5300.0  1593.7     0.0
 FOZ-500-50HZ    -8.5     0.0     0.0     0.0  2659.1     0.0     0.0
                                                 76.7%                1101 ITAIPU50-500  1 -1375.4  -282.2  1379.7                17
                                                 78.9%                1101 ITAIPU50-500  2 -1413.8  -289.8  1418.2                17
                                                 70.8%                1103 MARGEMDIR500  1 -1272.6  -244.3  1273.5                17
                                                 72.2%                1103 MARGEMDIR500  2 -1298.2  -249.1  1299.0                17
CEPEL - CENTRO DE PESQUISAS DE ENERGIA ELETRICA - PROGRAMA DE ANALISE DE REDES - V08MAR05A                              PAG.  23

ANUAL 06/07 * SETEMBRO 2006 PESADA S/SE 19H N/NE 19H * ANAT0 - FSE - C13
RELATORIO COMPLETO DO SISTEMA * AREA  1 * *              FURNAS              *

X----------------- D A D O S  -  B A R R A ------------------------X------------ F L U X O S  -  C I R C U I T O S ------------X
 DA BARRA      TENSAO GERACAO INJ EQV  CARGA   ELO CC  SHUNT    MOTOR
 NUM. KV TIPO   MOD/     MW/     MW/     MW/     MW/   Mvar/     MW/
     NOME       ANG     Mvar    Mvar    Mvar    Mvar   EQUIV    Mvar  PARA BARRA                    FLUXOS
                                                FLUXO % SHUNT L         NUM.     NOME     NC     MW    Mvar  MVA/V_d   TAP  DEFAS TIE
X------------X-------X-------X-------X-------X-------X-------X-------X----X------------X--X-------X-------X-------X------X-----X---X

  86    1  0   1.047     0.0     0.0    66.0 -5095.8  3365.4     0.0
 IBIUNA---345   -79.6     0.0     0.0     0.0  2654.5     0.0     0.0
                                                  9.3%                  48 IBIUNA---4CS  1     0.0   102.4    97.8 1.013F
                                                 38.0%                  78 T.PRETO--345  1   454.9   -49.0   437.0
                                                 38.0%                  78 T.PRETO--345  2   454.9   -49.0   437.0
                                                 22.0%                 122 IBIUNA---500  1  -170.9   -23.1   164.7 0.980F
                                                 22.0%                 122 IBIUNA---500  2  -170.9   -23.1   164.7 0.980F
                                                 52.1%                 126 GUARULHO-345  1   835.5    21.8   798.3
                                                 52.1%                 126 GUARULHO-345  2   835.5    21.8   798.3
                                                 68.1%                 488 INTERL---345  1  1395.3   354.5  1375.0                04
                                                 68.1%                 488 INTERL---345  2  1395.3   354.5  1375.0                04
  90    1  0   1.038     0.0     0.0     0.0     0.0     0.0     0.0
 AREINHA--345  -134.2     0.0     0.0     0.0     0.0     0.0     0.0
                                                 44.6%                 147 CAMPOS---345  1  -331.5    19.5   320.0
                                                  5.3%                 149 VITORIA--345  1    39.1     2.8    37.8
                                                 62.8%                2608 AREINH-1-FIC  1   146.2   -11.1   141.3 1.004F        11
                                                 62.8%                2618 AREINH-2-FIC  1   146.2   -11.1   141.3 1.004F        11
  92  500  0   1.077     0.0     0.0     0.0     0.0     0.0     0.0
 SAMAMB--CAP1   -94.9     0.0     0.0     0.0     0.0     0.0     0.0                                  -85.2 SHL
                                                 24.8%                 233 SAMAMBAI-500  1  -305.8   100.2   298.9
                                                 24.8%   -85.2         235 S.MESA---500  1   305.8  -100.2   298.9
  93  500  0   1.092     0.0     0.0     0.0     0.0     0.0     0.0
 SAMAMB--CAP2   -95.4     0.0     0.0     0.0     0.0     0.0     0.0                                 -162.3 SHL
                                                 23.8%                 233 SAMAMBAI-500  1  -366.4    20.0   336.0
                                                 23.8%  -162.3         235 S.MESA---500  1   366.4   -20.0   336.0
  94  500  0   1.092     0.0     0.0     0.0     0.0     0.0     0.0
 SAMAMB--CAP3   -95.4     0.0     0.0     0.0     0.0     0.0     0.0                                 -162.3 SHL
                                                 25.9%                 233 SAMAMBAI-500  1  -366.4    20.0   336.0
                                                 25.9%  -162.3         235 S.MESA---500  1   366.4   -20.0   336.0
  98    1  0   1.011     0.0     0.0     0.0     0.0     0.0     0.0
 JACARE-2-138  -113.9     0.0     0.0     0.0     0.0     0.0     0.0
                                                 47.7%                 135 JAC-FIC-TR1A  1  -108.5     2.7   107.4 0.963*
                                                 47.7%                 166 JAC-FIC-TR1B  1  -108.5     2.7   107.4 0.963*
                                                 41.6%                 178 GRAJAU---138  1   -88.8   -22.5    90.6
                                                  0.7%                 180 JACAREP--138  1    71.8    -0.5    71.0
                                                 24.2%                 278 PALMARES-138  1    43.7   -18.2    46.9                09
                                                 96.6%                 289 CAMARA---138  1   111.3    29.8   114.0                09
                                                 24.4%                 293 CACHAMORRA    1    47.4    -7.2    47.4                09
                                                 62.4%                1640 P.MIGUEL-138  1    72.2    17.6    73.6                09
                                                 18.6%                3958 CASCADURA138  1   -40.7    -4.4    40.5                09
```

ANUAL 06/07 * SETEMBRO 2006 PESADA S/SE 19H N/NE 19H * ANAT0 - FSE - C13
RELATORIO COMPLETO DO SISTEMA * AREA 1 * * FURNAS *

```
X----------------- D A D O S  -  B A R R A ------------------------X------------ F L U X O S  -  C I R C U I T O S ------------X
 DA BARRA      TENSAO GERACAO INJ EQV  CARGA   ELO CC  SHUNT    MOTOR
 NUM. KV TIPO   MOD/     MW/     MW/     MW/     MW/   Mvar/     MW/
     NOME       ANG     Mvar    Mvar    Mvar    Mvar   EQUIV    Mvar  PARA BARRA                    FLUXOS
                                                FLUXO % SHUNT L         NUM.     NOME     NC     MW    Mvar  MVA/V_d   TAP  DEFAS TIE
X------------X-------X-------X-------X-------X-------X-------X-------X----X------------X--X-------X-------X-------X------X-----X---X

   99  525  0   1.033     0.0     0.0     0.0     0.0   -85.4     0.0
 ARARAQUA-525   -79.1     0.0     0.0     0.0     0.0     0.0     0.0
                                              35.3%                  101 ARARAQUA-500  1   729.7    -9.3   706.3 0.952F
                                              35.5%                  556 ASSIS----525  1  -729.7   -76.1   710.0               05
  100    1  0   1.078     0.0     0.0     0.0     0.0     0.0     0.0
 MARIMBON-500   -75.5     0.0     0.0     0.0     0.0     0.0     0.0
                                              68.5%                   20 MARIMBON-8GR  1  -895.7   676.6  1041.8 1.000F
                                              17.7%                  101 ARARAQUA-500  1   264.8  -173.8   294.0
                                              17.7%                  101 ARARAQUA-500  2   266.8  -173.5   295.4
                                              22.7%                  210 ITUMBIAR-500  1   384.7  -175.4   392.4
                                              48.8%                  214 MARIMBON-FIC  1   276.7  -100.0   273.0 1.050F
                                              16.8%                  535 AVERMELH-500  1  -297.3   -53.9   280.4               05
  101  500  0   1.085     0.0     0.0     0.0     0.0     0.0     0.0
 ARARAQUA-500   -79.1     0.0     0.0     0.0     0.0     0.0     0.0                                -344.0 SHL
                                              33.6%                   99 ARARAQUA-525  1  -729.7     9.8   672.4
                                              14.6%   -86.0          100 MARIMBON-500  1  -263.8     6.0   243.1
                                              14.7%   -86.0          100 MARIMBON-500  2  -265.7     7.2   244.9
                                              42.8%   -86.0          102 POCOS----500  1   772.7   -26.5   712.3
                                              26.9%   -86.0          103 CAMPINAS-500  1   486.5     3.5   448.2
  102    1  0   1.086     0.0     0.0     0.0     0.0     0.0     0.0
 POCOS----500   -88.4     0.0     0.0     0.0     0.0     0.0     0.0                                -160.4 SHL
                                              42.3%                  101 ARARAQUA-500  1  -764.6    -8.6   704.2
                                              24.7%                  121 PC--FIC-AT51  1   149.6   -13.5   138.3 1.050F
                                              34.0%  -160.4         1503 ITAJU3-5-500  1   615.0    22.0   566.8               02
  103    1  0   1.076     0.0     0.0     0.0     0.0     0.0     0.0
 CAMPINAS-500   -84.8     0.0     0.0     0.0     0.0     0.0     0.0                                -157.4 SHL
                                              27.6%                  101 ARARAQUA-500  1  -483.4  -105.8   460.0
                                              39.7%  -157.4          104 C.PAULIS-500  1   710.8   -21.7   661.0
                                              48.4%                  122 IBIUNA---500  1  -866.3    50.2   806.6
                                              53.4%                  124 CAMPINAS-FIC  1   319.6    38.6   299.2 1.050F
                                              53.4%                  176 CAMPINA2-FIC  1   319.4    38.6   299.1 1.050F
```



ANUAL 06/07 * SETEMBRO 2006 PESADA S/SE 19H N/NE 19H * ANAT0 - FSE - C13
RELATORIO COMPLETO DO SISTEMA * AREA 1 * * FURNAS *

```
X----------------- D A D O S  -  B A R R A ------------------------X------------ F L U X O S  -  C I R C U I T O S ------------X
 DA BARRA      TENSAO GERACAO INJ EQV  CARGA   ELO CC  SHUNT    MOTOR
 NUM. KV TIPO   MOD/     MW/     MW/     MW/     MW/   Mvar/     MW/
     NOME       ANG     Mvar    Mvar    Mvar    Mvar   EQUIV    Mvar  PARA BARRA                    FLUXOS
                                                FLUXO % SHUNT L         NUM.     NOME     NC     MW    Mvar  MVA/V_d   TAP  DEFAS TIE
X------------X-------X-------X-------X-------X-------X-------X-------X----X------------X--X-------X-------X-------X------X-----X---X

  104  500  0   1.090     0.0     0.0     0.0     0.0  -161.5     0.0
 C.PAULIS-500   -95.6     0.0     0.0     0.0     0.0     0.0     0.0
                                              49.5%                   77 T.PRETO--500  1  -897.4    45.4   824.7
                                              30.2%                   77 T.PRETO--500  2  -897.4    45.4   824.7
                                              38.7%                  103 CAMPINAS-500  1  -702.0     4.0   644.3
```

```
                                                 36.4%                 105 ANGRA----500  1   656.5   -64.4   605.4
                                                 44.2%                 106 ADRIANO--500  1   800.0   -62.2   736.4
                                                 42.5%                 106 ADRIANO--500  3  1024.3   -92.4   943.9
                                                 44.4%                 109 ADR-REAT-500  2   803.6   -61.2   739.6
                                                 49.8%                 183 C.PAULIS-138 57   123.6   -56.1   124.6
                                                 49.8%                 183 C.PAULIS-138 59   123.6   -56.1   124.6
                                                 36.6%                 598 TAUBATE--500  1  -637.0   187.5   609.4                05
                                                 22.1%                1503 ITAJU3-5-500  1  -397.8   -51.3   368.1                02
  105  500  0   1.087     0.0     0.0     0.0     0.0     0.0     0.0
 ANGRA----500  -100.3     0.0     0.0     0.0     0.0     0.0     0.0
                                                  4.0%                  10 ANGRA-1--000  1    28.5    17.1    30.6 1.075F        44
                                                 63.5%                  11 ANGRA-2--1GR  1 -1012.1    58.3   932.8 1.075F        44
                                                 36.1%                 104 C.PAULIS-500  1  -653.2   -23.5   601.4
                                                 38.4%                 107 GRAJAU---500  1   690.1   -82.9   639.6
                                                 38.2%                 108 S.JOSE---500  1   690.5    16.6   635.5
                                                 59.0%                 181 ANGRA-DEF138  1   256.1    14.4   236.0
  106  500  0   1.080     0.0     0.0     0.0     0.0     0.0     0.0
 ADRIANO--500  -105.0     0.0     0.0     0.0     0.0     0.0     0.0
                                                 44.1%                 104 C.PAULIS-500  1  -791.6   -45.6   734.3
                                                 42.4%                 104 C.PAULIS-500  3 -1013.4   -69.3   940.7
                                                 30.7%                 108 S.JOSE---500  1   754.7   280.9   745.7
                                                  1.4%                 109 ADR-REAT-500  1   -82.0  -123.5   137.3
                                                 60.2%                 139 ADRIAN-F-T57  1   364.2   -10.1   337.4 1.050F
                                                 63.7%                 141 ADRIAN-F-T53  1   384.8   -10.7   356.5 1.050F
                                                 63.5%                 142 ADRIAN-F-T55  1   383.3   -21.7   355.6 1.050F
  107  500  0   1.081     0.0     0.0     0.0     0.0     0.0     0.0
 GRAJAU---500  -107.4     0.0     0.0     0.0     0.0     0.0     0.0
                                                 38.2%                 105 ANGRA----500  1  -685.1   -59.7   636.1
                                                 27.1%                 109 ADR-REAT-500  1  -712.1    20.6   659.0
                                                 53.9%                 110 GR--FIC1-T52 52   349.4    10.9   323.4 1.050F
                                                 53.8%                 178 GRAJAU---138 56   349.1     8.6   323.1
                                                 53.8%                 178 GRAJAU---138 58   349.1     8.6   323.1
                                                 53.9%                 179 GR--FIC2-T54 54   349.4    10.9   323.4 1.050F
CEPEL - CENTRO DE PESQUISAS DE ENERGIA ELETRICA - PROGRAMA DE ANALISE DE REDES - V08MAR05A                                PAG.  26

ANUAL 06/07 * SETEMBRO 2006 PESADA S/SE 19H N/NE 19H * ANAT0 - FSE - C13
RELATORIO COMPLETO DO SISTEMA * AREA  1 * *              FURNAS              *

X----------------- D A D O S  -  B A R R A -------------------------X------------ F L U X O S  -  C I R C U I T O S ------------X
 DA BARRA      TENSAO GERACAO INJ EQV  CARGA   ELO CC  SHUNT    MOTOR
 NUM. KV TIPO   MOD/     MW/     MW/     MW/     MW/   Mvar/     MW/
     NOME       ANG     Mvar    Mvar    Mvar    Mvar   EQUIV    Mvar  PARA BARRA                    FLUXOS
                                                FLUXO % SHUNT L         NUM.     NOME     NC     MW    Mvar  MVA/V_d   TAP  DEFAS TIE
X------------X-------X-------X-------X-------X-------X-------X-------X----X------------X--X-------X-------X-------X------X-----X---X

  108  500  0   1.067     0.0     0.0     0.0     0.0     0.0     0.0
 S.JOSE---500  -106.5     0.0     0.0     0.0     0.0     0.0     0.0
                                                 39.3%                 105 ANGRA----500  1  -685.9  -128.3   653.9
                                                 31.4%                 106 ADRIANO--500  1  -753.5  -308.6   763.1
                                                 58.9%                 169 S.JOSE---138 13   360.6   109.4   353.1
                                                 58.9%                 169 S.JOSE---138 14   360.6   109.4   353.1
                                                 58.6%                4200 S.JOSE2--138 11   359.1   109.1   351.7
                                                 58.6%                4200 S.JOSE2--138 12   359.1   109.1   351.7
  109   14  0   1.080     0.0     0.0     0.0     0.0     0.0     0.0
 ADR-REAT-500  -105.0     0.0     0.0     0.0     0.0     0.0     0.0
                                                 44.3%                 104 C.PAULIS-500  2  -795.4   -46.6   737.8
                                                  1.4%                 106 ADRIANO--500  1    82.0   123.6   137.3
                                                 27.4%                 107 GRAJAU---500  1   713.4   -77.0   664.4
  110    1  0   1.030     0.0     0.0     0.0     0.0     0.0     0.0
 GR--FIC1-T52  -111.7     0.0     0.0     0.0     0.0     0.0     0.0
```

```
                                                  5.3%                 44 GRAJAU-1-1CS 52     1.3   -10.8    10.6
                                                 56.6%                107 GRAJAU---500 52  -349.4    15.5   339.6
                                                 56.3%                178 GRAJAU---138 52   348.1    -4.6   338.0
 111    1  0   1.040     0.0     0.0     0.0     0.0     0.0     0.0
BSUL---CI71%   -99.0     0.0     0.0     0.0     0.0     0.0     0.0
                                                  0.0%                 41 B.SUL----000  1     0.0     0.0     0.0
                                                  0.0%                219 B.SUL----345  1     0.0     0.0     0.0
 112    1  0   1.039     0.0     0.0     0.0     0.0     0.0     0.0
Bateias500-1   -71.4     0.0     0.0     0.0     0.0     0.0     0.0                                -165.5 SHL
                                                 47.6%  -165.5       125 IBIUNA--CAP1  1   618.6  -170.7   617.9
                                                 47.6%               895 Bateias--525  1  -618.6   170.7   617.9 1.050F        21
 113    1  0   1.039     0.0     0.0     0.0     0.0     0.0     0.0
Bateias500-2   -71.4     0.0     0.0     0.0     0.0     0.0     0.0                                -165.5 SHL
                                                 47.6%  -165.5       130 IBIUNA--CAP2  1   618.6  -170.7   617.9
                                                 47.6%               895 Bateias--525  1  -618.6   170.7   617.9 1.050F        21
 114    1  0   1.031     0.0     0.0     0.0     0.0     0.0     0.0
VITO-FIC-AT5  -138.1     0.0     0.0     0.0     0.0     0.0     0.0
                                                  0.0%                115 VIT-AT5-13.8  1     0.0     0.0     0.0
                                                 54.7%                149 VITORIA--345  1  -126.9     1.3   123.1
                                                 54.7%                177 VITORIA--138  1   126.9    -1.3   123.1
 115    1  0   1.031     0.0     0.0     0.0     0.0     0.0     0.0
VIT-AT5-13.8  -138.1     0.0     0.0     0.0     0.0     0.0     0.0
                                                  0.0%                114 VITO-FIC-AT5  1     0.0     0.0     0.0 1.000F
CEPEL - CENTRO DE PESQUISAS DE ENERGIA ELETRICA - PROGRAMA DE ANALISE DE REDES - V08MAR05A                                PAG.  27

ANUAL 06/07 * SETEMBRO 2006 PESADA S/SE 19H N/NE 19H * ANAT0 - FSE - C13
RELATORIO COMPLETO DO SISTEMA * AREA  1 * *              FURNAS              *

X----------------- D A D O S  -  B A R R A ------------------------X------------ F L U X O S  -  C I R C U I T O S ------------X
 DA BARRA      TENSAO GERACAO INJ EQV  CARGA   ELO CC  SHUNT    MOTOR
 NUM. KV TIPO   MOD/     MW/     MW/     MW/     MW/   Mvar/     MW/
     NOME       ANG     Mvar    Mvar    Mvar    Mvar   EQUIV    Mvar  PARA BARRA                    FLUXOS
                                                FLUXO % SHUNT L         NUM.     NOME     NC     MW    Mvar  MVA/V_d   TAP  DEFAS TIE
X------------X-------X-------X-------X-------X-------X-------X-------X----X------------X--X-------X-------X-------X------X-----X---X

 116    1  0   1.038     0.0     0.0     0.0     0.0     0.0     0.0
IMBARIE-TAP   -115.1     0.0     0.0     0.0     0.0     0.0     0.0
                                                  0.0%                172 IMBARIE--138  1     0.0     0.0     0.0
                                                 67.2%                173 ADRIANO--138  1  -100.4   -16.6    98.1
                                                 67.2%               1732 P.ROSA   138  1   100.4    16.6    98.1               10
 118    1  0   1.003     0.0     0.0     0.0     0.0     0.0     0.0
BANDE-FIC-T4   -98.2     0.0     0.0     0.0     0.0     0.0     0.0
                                                  0.0%                119 BAND-TER-T3   1     0.0     0.0     0.0
                                                 65.4%                218 BANDEIRA-345  1  -137.4   -54.1   147.2
                                                 65.4%                226 BANDEIRA-230  1   137.4    54.1   147.2
 119    1  0   1.003     0.0     0.0     0.0     0.0     0.0     0.0
BAND-TER-T3    -98.2     0.0     0.0     0.0     0.0     0.0     0.0
                                                  0.0%                118 BANDE-FIC-T4  1     0.0     0.0     0.0 1.000F
 120    1  0   1.048     0.0     0.0     0.0     0.0     0.0     0.0
P.CALDAS-345   -90.3     0.0     0.0     0.0     0.0     0.0     0.0
                                                 25.5%                121 PC--FIC-AT51  1  -148.4    18.5   142.7 1.010F
                                                  9.3%                123 CAMPINAS-345  1   -57.8    -5.4    55.3
                                                 13.6%                126 GUARULHO-345  1   -81.1   -25.9    81.2
                                                 13.5%                126 GUARULHO-345  2   -80.1   -26.8    80.6
                                                  6.9%                129 MOGI-----345  1   -17.5   -39.4    41.1
                                                 11.2%                134 LBARRETO-345  1   -77.0   -33.4    80.1
                                                 11.2%                134 LBARRETO-345  2   -77.4   -33.0    80.3
                                                 10.6%                136 FURNAS---345  1    56.5   -35.0    63.4
                                                 10.6%                136 FURNAS---345  2    56.5   -35.0    63.4
                                                 74.9%                164 PC--FIC-AT02  2   104.1    55.2   112.4 0.957F
```

```
                                                   75.0%                 170 P.CALDAS-138  1   105.6    52.4   112.5
                                                   74.2%                 170 P.CALDAS-138  3   104.5    51.9   111.3
                                                   79.6%                 170 P.CALDAS-138  4   112.2    55.7   119.5
 121    1  0   1.039     0.0     0.0     0.0     0.0     0.0     0.0
PC--FIC-AT51   -90.7     0.0     0.0     0.0     0.0     0.0     0.0
                                                   25.9%                 102 POCOS----500  1  -149.6    19.6   145.2
                                                   25.7%                 120 P.CALDAS-345  1   148.4   -19.6   144.1
                                                    0.3%                 198 POCOS---13.8  1     1.2     0.0     1.1
 122  500  0   1.073     0.0     0.0     0.0     0.0     0.0     0.0
IBIUNA---500   -78.0     0.0     0.0     0.0     0.0     0.0     0.0
                                                   21.5%                  86 IBIUNA---345  1   170.9    28.1   161.4
                                                   21.5%                  86 IBIUNA---345  2   170.9    28.1   161.4
                                                   49.2%                 103 CAMPINAS-500  1   872.9  -101.2   819.0
                                                   43.6%                 125 IBIUNA--CAP1  1  -607.4    22.5   566.5
                                                   43.6%                 130 IBIUNA--CAP2  1  -607.4    22.5   566.5
CEPEL - CENTRO DE PESQUISAS DE ENERGIA ELETRICA - PROGRAMA DE ANALISE DE REDES - V08MAR05A                          PAG.  28

ANUAL 06/07 * SETEMBRO 2006 PESADA S/SE 19H N/NE 19H * ANAT0 - FSE - C13
RELATORIO COMPLETO DO SISTEMA * AREA  1 * *              FURNAS              *

X----------------- D A D O S  -  B A R R A ------------------------X------------ F L U X O S  -  C I R C U I T O S ------------X
 DA BARRA      TENSAO GERACAO INJ EQV  CARGA   ELO CC  SHUNT    MOTOR
 NUM. KV TIPO   MOD/     MW/     MW/     MW/     MW/   Mvar/     MW/
     NOME       ANG     Mvar    Mvar    Mvar    Mvar   EQUIV    Mvar  PARA BARRA                    FLUXOS
                                                FLUXO % SHUNT L         NUM.     NOME     NC     MW    Mvar  MVA/V_d   TAP  DEFAS TIE
X------------X-------X-------X-------X-------X-------X-------X-------X----X------------X--X-------X-------X-------X------X-----X---X

 123    1  0   1.039     0.0     0.0     0.0     0.0     0.0     0.0
CAMPINAS-345   -89.0     0.0     0.0     0.0     0.0     0.0     0.0
                                                   14.1%                 120 P.CALDAS-345  1    57.9   -65.7    84.3
                                                   55.0%                 124 CAMPINAS-FIC  1  -319.6   -14.8   308.0 1.020F
                                                   12.6%                 126 GUARULHO-345  1   -92.1   -19.7    90.7
                                            SUP   110.6%                 162 CAMPINAS-TR1  1   169.8    29.5   165.9 1.004F
                                            SUP   110.2%                 171 CAMPINAS-138  2   169.3    28.7   165.4
                                            SUP   106.6%                 171 CAMPINAS-138  3   163.8    27.8   160.0
                                            SUP   110.8%                 171 CAMPINAS-138  4   170.3    28.9   166.3
                                                   55.0%                 176 CAMPINA2-FIC  1  -319.4   -14.8   307.9 1.020F
 124    1  0   1.018     0.0     0.0     0.0     0.0     0.0     0.0
CAMPINAS-FIC   -90.0     0.0     0.0     0.0     0.0     0.0     0.0
                                                   56.1%                 103 CAMPINAS-500  1  -319.6    -9.6   314.1
                                                   56.1%                 123 CAMPINAS-345  1   319.6     9.6   314.1
                                                    0.0%                 196 CAMPINAS13.8  1     0.0     0.0     0.0
 125    1  0   1.083     0.0     0.0     0.0     0.0     0.0     0.0
IBIUNA--CAP1   -84.1     0.0     0.0     0.0     0.0     0.0     0.0                                -109.4 SHL
                                                   43.6%  -109.4         112 Bateias500-1  1  -607.4    88.3   566.5
                                                   43.6%                 122 IBIUNA---500  1   607.4   -88.3   566.5
 126    1  0   1.040     0.0     0.0     0.0     0.0     0.0     0.0
GUARULHO-345   -87.7     0.0     0.0     0.0     0.0     0.0     0.0
                                                   52.1%                  86 IBIUNA---345  1  -828.5    39.5   797.7
                                                   52.1%                  86 IBIUNA---345  2  -828.5    39.5   797.7
                                                   17.4%                 120 P.CALDAS-345  1    81.5   -71.3   104.1
                                                   17.3%                 120 P.CALDAS-345  2    80.5   -71.6   103.7
                                                   13.0%                 123 CAMPINAS-345  1    92.3   -28.4    92.9
                                                   69.9%                 434 NOR-T70B-345  1   516.0   116.2   508.7                04
                                                   23.8%                 435 NORTE----345  1   443.4    -2.6   426.4                04
                                                   23.8%                 435 NORTE----345  2   443.4    -2.6   426.4                04
                                                    0.8%                 439 ANHANG---345  1     0.0   -18.7    17.9                04
                                                    0.0%                 439 ANHANG---345  2     0.0     0.0     0.0                04
 127  345  0   1.037     0.0     0.0     0.0     0.0     0.0     0.0
MOG-RLC1-345   -88.4     0.0     0.0     0.0     0.0     0.0     0.0
```

```
                                                 31.8%                  129 MOGI-----345  1   300.4     7.7   289.6
                                                 31.8%                  449 ITAPETI--345  1  -300.4    -7.7   289.6                04
 128  345  0   1.037     0.0     0.0     0.0     0.0     0.0     0.0
MOG-RLC2-345   -88.4     0.0     0.0     0.0     0.0     0.0     0.0
                                                 31.8%                  129 MOGI-----345  1   300.4     7.7   289.6
                                                 31.8%                  449 ITAPETI--345  1  -300.4    -7.7   289.6                04
CEPEL - CENTRO DE PESQUISAS DE ENERGIA ELETRICA - PROGRAMA DE ANALISE DE REDES - V08MAR05A                                PAG.  29

ANUAL 06/07 * SETEMBRO 2006 PESADA S/SE 19H N/NE 19H * ANAT0 - FSE - C13
RELATORIO COMPLETO DO SISTEMA * AREA  1 * *              FURNAS             *

X----------------- D A D O S  -  B A R R A ------------------------X------------ F L U X O S  -  C I R C U I T O S ------------X
 DA BARRA      TENSAO GERACAO INJ EQV  CARGA   ELO CC  SHUNT    MOTOR
 NUM. KV TIPO   MOD/     MW/     MW/     MW/     MW/   Mvar/     MW/
     NOME       ANG     Mvar    Mvar    Mvar    Mvar   EQUIV    Mvar  PARA BARRA                    FLUXOS
                                                FLUXO % SHUNT L         NUM.     NOME     NC     MW    Mvar  MVA/V_d   TAP  DEFAS TIE
X------------X-------X-------X-------X-------X-------X-------X-------X----X------------X--X-------X-------X-------X------X-----X---X

 129    1  0   1.037     0.0     0.0     0.0     0.0     0.0     0.0
MOGI-----345   -89.6     0.0     0.0     0.0     0.0     0.0     0.0
                                                 12.9%                  120 P.CALDAS-345  1    17.5   -77.9    77.0
                                                 31.8%                  127 MOG-RLC1-345  1  -300.4    -1.3   289.6
                                                 31.8%                  128 MOG-RLC2-345  1  -300.4    -1.3   289.6
                                                 29.9%                  161 MOGI-----230  1   149.8   -40.5   149.6
                                                 29.9%                  161 MOGI-----230  2   149.8   -40.5   149.6
                                                 43.9%                  433 NOR-T70A-345  1   283.7   161.7   314.9                04
 130    1  0   1.083     0.0     0.0     0.0     0.0     0.0     0.0
IBIUNA--CAP2   -84.1     0.0     0.0     0.0     0.0     0.0     0.0                                   -109.4 SHL
                                                 43.6%  -109.4          113 Bateias500-2  1  -607.4    88.3   566.5
                                                 43.6%                  122 IBIUNA---500  1   607.4   -88.3   566.5
 131  345  0   1.035     0.0     0.0     0.0     0.0     0.0     0.0
M.MORAES-345   -87.8     0.0     0.0     0.0     0.0     0.0     0.0
                                                 66.1%                   22 M.MOR.A--5GR  1  -257.2    25.7   249.8 1.000F
                                                 83.5%                  132 M.MORAES-FIC  1    82.6    99.8   125.2 0.972F
                                                  7.7%                  134 LBARRETO-345  1   -25.7   -50.9    55.1
                                                 28.8%                  136 FURNAS---345  1   200.3   -74.6   206.6
 132    1  0   1.004     0.0     0.0     0.0     0.0     0.0     0.0
M.MORAES-FIC   -90.8     0.0     0.0     0.0     0.0     0.0     0.0
                                                 81.1%                  131 M.MORAES-345  1   -82.6   -90.0   121.7
                                                 81.1%                  187 M.MORAES-138  1    82.6    90.0   121.7
 133    1  0   1.027     0.0     0.0     0.0     0.0     0.0     0.0
ADRIAN-F-T1D  -113.3     0.0     0.0     0.0     0.0     0.0     0.0
                                                 59.3%                  140 ADRIANO--345  1  -134.9   -24.4   133.5
                                                 59.3%                  173 ADRIANO--138  1   134.9    24.4   133.5
                                                  0.0%                  209 ADRIAN-T-T1D  1     0.0     0.0     0.0
 134  345  0   1.039     0.0     0.0     0.0     0.0     0.0     0.0
LBARRETO-345   -87.7     0.0     0.0     0.0     0.0     0.0     0.0
                                                 63.9%                   12 LCBARRET-5GR  1  -744.2   125.3   726.4 0.999F
                                                  0.0%                   13 LCBARRET-000  1     0.0     0.0     0.0 0.999F
                                                 14.7%                  120 P.CALDAS-345  1    77.3   -77.7   105.5
                                                 14.7%                  120 P.CALDAS-345  2    77.8   -77.4   105.6
                                                  5.6%                  131 M.MORAES-345  1    25.8    32.9    40.2
                                                 29.8%                  136 FURNAS---345  1   173.5   -63.8   178.0
                                                 64.2%                  326 JAGUARA--345  1   563.8   106.2   552.2                02
                                                 24.8%                  396 VGRANDE--345  1  -174.0   -45.6   173.1                02
 135    1  0   1.049     0.0     0.0     0.0     0.0     0.0     0.0
JAC-FIC-TR1A  -114.2     0.0     0.0     0.0     0.0     0.0     0.0
                                                 46.0%                   98 JACARE-2-138  1   108.5    -3.3   103.4
                                                 46.0%                  144 JACAREP--345  1  -108.5     3.3   103.4
                                                  0.0%                  167 JAC-13.8-R60  1     0.0     0.0     0.0
```

ANUAL 06/07 * SETEMBRO 2006 PESADA S/SE 19H N/NE 19H * ANAT0 - FSE - C13
RELATORIO COMPLETO DO SISTEMA * AREA 1 * * FURNAS *

| DADOS - BARRA | | | | | | | | | FLUXOS - CIRCUITOS | | | | | | | | | |
|---|---|---|---|---|---|---|---|---|---|---|---|---|---|---|---|---|---|---|
| DA BARRA NUM. | KV | TIPO | TENSAO MOD/ ANG | GERACAO MW/ Mvar | INJ EQV MW/ Mvar | CARGA MW/ Mvar | ELO CC MW/ Mvar FLUXO % | SHUNT Mvar/ EQUIV SHUNT L | MOTOR MW/ Mvar | PARA BARRA NUM. | NOME | NC | MW | FLUXOS Mvar | MVA/V_d | TAP | DEFAS | TIE |
| 136 | 345 | 0 | 1.045 | 0.0 | 0.0 | 0.0 | 0.0 | 0.0 | 0.0 | | | | | | | | | |
| FURNAS---345 | | | -91.6 | 0.0 | 0.0 | 0.0 | 0.0 | 0.0 | 0.0 | | | | | | | | | |
| | | | | | | | 67.9% | | | 16 | FURNAS---6GR | 1 | -892.5 | 173.6 | 869.7 | 1.000F | | |
| | | | | | | | 0.0% | | | 17 | FURNAS---000 | 1 | 0.0 | 0.0 | 0.0 | 1.000F | | |
| | | | | | | | 10.8% | | | 120 | P.CALDAS-345 | 1 | -56.3 | -36.8 | 64.4 | | | |
| | | | | | | | 10.8% | | | 120 | P.CALDAS-345 | 2 | -56.3 | -36.8 | 64.4 | | | |
| | | | | | | | 26.9% | | | 131 | M.MORAES-345 | 1 | -198.9 | 31.0 | 192.6 | | | |
| | | | | | | | 27.6% | | | 134 | LBARRETO-345 | 1 | -172.5 | -0.3 | 165.0 | | | |
| | | | | | | | 44.9% | | | 138 | ITUTINGA-345 | 1 | 333.6 | -73.4 | 326.7 | | | |
| | | | | | | | 44.5% | | | 138 | ITUTINGA-345 | 2 | 348.6 | -73.4 | 340.8 | | | |
| | | | | | | | 91.3% | | | 367 | PIMENTA--345 | 1 | 694.3 | 16.0 | 664.3 | | | 02 |
| 137 | 1 | 0 | 1.091 | 0.0 | 0.0 | 0.0 | 0.0 | 0.0 | 0.0 | | | | | | | | | |
| JAC-FIC-TR2A | | | -114.0 | 0.0 | 0.0 | 0.0 | 0.0 | 0.0 | 0.0 | | | | | | | | | |
| | | | | | | | 62.7% | | | 144 | JACAREP--345 | 1 | -115.4 | 102.0 | 141.2 | | | |
| | | | | | | | 0.0% | | | 159 | JAC-13.8-R30 | 1 | 0.0 | 0.0 | 0.0 | | | |
| | | | | | | | 62.7% | | | 180 | JACAREP--138 | 1 | 115.4 | -102.0 | 141.2 | | | |
| 138 | 345 | 0 | 1.057 | 0.0 | 0.0 | 0.0 | 0.0 | 0.0 | 0.0 | | | | | | | | | |
| ITUTINGA-345 | | | -102.9 | 0.0 | 0.0 | 0.0 | 0.0 | 0.0 | 0.0 | | | | | | | | | |
| | | | | | | | 42.7% | | | 136 | FURNAS---345 | 1 | -326.9 | 28.0 | 310.6 | | | |
| | | | | | | | 42.4% | | | 136 | FURNAS---345 | 2 | -342.4 | 25.6 | 325.0 | | | |
| | | | | | | | 27.9% | | | 140 | ADRIANO--345 | 1 | 209.6 | -45.9 | 203.1 | | | |
| | | | | | | | 27.8% | | | 140 | ADRIANO--345 | 2 | 220.2 | -45.6 | 212.9 | | | |
| | | | | | | | 52.0% | | | 4056 | ITUTING-FIC1 | 1 | 122.1 | 19.3 | 117.0 | 1.000F | | 02 |
| | | | | | | | 50.0% | | | 4058 | ITUTING-FIC2 | 1 | 117.4 | 18.6 | 112.5 | 1.000F | | 02 |
| 139 | 1 | 0 | 1.036 | 0.0 | 0.0 | 0.0 | 0.0 | 0.0 | 0.0 | | | | | | | | | |
| ADRIAN-F-T57 | | | -110.7 | 0.0 | 0.0 | 0.0 | 0.0 | 0.0 | 0.0 | | | | | | | | | |
| | | | | | | | 63.3% | | | 106 | ADRIANO--500 | 1 | -364.2 | 46.8 | 354.3 | | | |
| | | | | | | | 63.3% | | | 140 | ADRIANO--345 | 1 | 364.2 | -46.8 | 354.3 | | | |
| | | | | | | | 0.0% | | | 197 | ADRI-T57-REA | 1 | 0.0 | 0.0 | 0.0 | | | |
| 140 | 345 | 0 | 1.045 | 0.0 | 0.0 | 0.0 | 0.0 | 0.0 | 0.0 | | | | | | | | | |
| ADRIANO--345 | | | -109.9 | 0.0 | 0.0 | 0.0 | 0.0 | 0.0 | 0.0 | | | | | | | | | |
| | | | | | | | 59.0% | | | 133 | ADRIAN-F-T1D | 1 | 134.9 | 32.7 | 132.9 | 1.005F | | |
| | | | | | | | 27.7% | | | 138 | ITUTINGA-345 | 1 | -207.1 | -40.4 | 201.9 | | | |
| | | | | | | | 27.8% | | | 138 | ITUTINGA-345 | 2 | -217.8 | -44.2 | 212.7 | | | |
| | | | | | | | 62.6% | | | 139 | ADRIAN-F-T57 | 1 | -364.2 | 41.6 | 350.8 | 1.010F | | |
| | | | | | | | 65.8% | | | 141 | ADRIAN-F-T53 | 1 | -382.5 | 44.0 | 368.4 | 1.010F | | |
| | | | | | | | 67.9% | | | 142 | ADRIAN-F-T55 | 1 | -383.3 | 104.2 | 380.1 | 1.010F | | |
| | | | | | | | 59.0% | | | 143 | ADRIAN-F-T2B | 1 | 134.9 | 32.7 | 132.9 | 1.005F | | |
| | | | | | | | 31.7% | | | 144 | JACAREP--345 | 1 | 216.1 | -98.0 | 227.1 | | | |
| | | | | | | | 33.3% | | | 144 | JACAREP--345 | 2 | 228.2 | -100.7 | 238.7 | | | |
| | | | | | | | 66.3% | | | 145 | ADRIAN-F-T1B | 1 | 151.6 | 36.8 | 149.3 | 1.005F | | |
| | | | | | | | 69.3% | | | 146 | ADRIAN-F-T2A | 1 | 158.4 | 38.4 | 156.0 | 1.005F | | |
| | | | | | | | 33.3% | | | 3966 | MACAE----345 | 1 | 265.3 | -23.5 | 254.9 | | | 41 |
| | | | | | | | 33.3% | | | 3966 | MACAE----345 | 2 | 265.3 | -23.5 | 254.9 | | | 41 |



ANUAL 06/07 * SETEMBRO 2006 PESADA S/SE 19H N/NE 19H * ANAT0 - FSE - C13
RELATORIO COMPLETO DO SISTEMA * AREA 1 * * FURNAS *

```
X----------------- D A D O S  -  B A R R A -------------------------X------------ F L U X O S  -  C I R C U I T O S ------------X
 DA BARRA      TENSAO GERACAO INJ EQV  CARGA   ELO CC  SHUNT    MOTOR
 NUM. KV TIPO   MOD/     MW/     MW/     MW/     MW/   Mvar/     MW/
     NOME       ANG     Mvar    Mvar    Mvar    Mvar   EQUIV    Mvar  PARA BARRA                    FLUXOS
                                                FLUXO % SHUNT L         NUM.     NOME     NC     MW    Mvar  MVA/V_d   TAP  DEFAS TIE
X------------X-------X-------X-------X-------X-------X-------X-------X----X------------X--X-------X-------X-------X------X-----X---X

  141    1  0   1.036     0.0     0.0     0.0     0.0     0.0     0.0
 ADRIAN-F-T53  -110.5     0.0     0.0     0.0     0.0     0.0     0.0
                                              66.8%                  106 ADRIANO--500  1  -384.8    48.1   374.3
                                              66.4%                  140 ADRIANO--345  1   382.5   -48.1   372.1
                                               1.2%                  195 ADRI-T53-CAP  1     2.3     0.0     2.2
  142    1  0   1.040     0.0     0.0     0.0     0.0     0.0     0.0
 ADRIAN-F-T55  -111.0     0.0     0.0     0.0     0.0     0.0     0.0
                                              66.7%                  106 ADRIANO--500  1  -383.3    62.7   373.4
                                              68.6%                  140 ADRIANO--345  1   383.3  -112.3   383.9
                                              25.5%                  194 ADRI-T55-REA  1     0.0    49.6    47.7
  143    1  0   1.027     0.0     0.0     0.0     0.0     0.0     0.0
 ADRIAN-F-T2B  -113.3     0.0     0.0     0.0     0.0     0.0     0.0
                                              59.3%                  140 ADRIANO--345  1  -134.9   -24.4   133.5
                                              59.3%                  173 ADRIANO--138  1   134.9    24.4   133.5
                                               0.0%                  206 ADRIAN-T-T25  1     0.0     0.0     0.0
  144  345  0   1.053     0.0     0.0     0.0     0.0     0.0     0.0
 JACAREP--345  -111.4     0.0     0.0     0.0     0.0     0.0     0.0
                                              45.8%                  135 JAC-FIC-TR1A  1   108.5     2.1   103.0 1.004F
                                              62.5%                  137 JAC-FIC-TR2A  1   115.4   -92.8   140.6 1.004F
                                              30.6%                  140 ADRIANO--345  1  -215.5    83.0   219.3
                                              32.2%                  140 ADRIANO--345  2  -227.6    85.1   230.7
                                              45.8%                  166 JAC-FIC-TR1B  1   108.5     2.1   103.0 1.004F
                                              57.5%                  180 JACAREP--138  1   110.8   -79.5   129.5
  145    1  0   1.026     0.0     0.0     0.0     0.0     0.0     0.0
 ADRIAN-F-T1B  -113.5     0.0     0.0     0.0     0.0     0.0     0.0
                                              66.7%                  140 ADRIANO--345  1  -151.6   -26.8   150.0
                                              66.7%                  173 ADRIANO--138  1   151.6    26.8   150.0
                                               0.0%                  204 ADRIAN-T-T1B  1     0.0     0.0     0.0
  146    1  0   1.025     0.0     0.0     0.0     0.0     0.0     0.0
 ADRIAN-F-T2A  -113.8     0.0     0.0     0.0     0.0     0.0     0.0
                                              69.7%                  140 ADRIANO--345  1  -158.4   -27.3   156.8
                                              69.7%                  173 ADRIANO--138  1   158.4    27.3   156.8
                                               0.0%                  205 ADRIAN-T-T2A  1     0.0     0.0     0.0
CEPEL - CENTRO DE PESQUISAS DE ENERGIA ELETRICA - PROGRAMA DE ANALISE DE REDES - V08MAR05A                              PAG.  32

ANUAL 06/07 * SETEMBRO 2006 PESADA S/SE 19H N/NE 19H * ANAT0 - FSE - C13
RELATORIO COMPLETO DO SISTEMA * AREA  1 * *              FURNAS              *

X----------------- D A D O S  -  B A R R A -------------------------X------------ F L U X O S  -  C I R C U I T O S ------------X
 DA BARRA      TENSAO GERACAO INJ EQV  CARGA   ELO CC  SHUNT    MOTOR
 NUM. KV TIPO   MOD/     MW/     MW/     MW/     MW/   Mvar/     MW/
     NOME       ANG     Mvar    Mvar    Mvar    Mvar   EQUIV    Mvar  PARA BARRA                    FLUXOS
                                                FLUXO % SHUNT L         NUM.     NOME     NC     MW    Mvar  MVA/V_d   TAP  DEFAS TIE
X------------X-------X-------X-------X-------X-------X-------X-------X----X------------X--X-------X-------X-------X------X-----X---X

  147  345  0   1.030     0.0     0.0     0.0     0.0  -127.3     0.0
 CAMPOS---345  -122.8     0.0     0.0     0.0     0.0     0.0     0.0
                                               0.0%                   34 UT-CAMPOS345  1     0.0    -1.4     1.3
                                               4.2%                   46 CAMPOS----CE  1     0.0     4.4     4.2 1.000F
                                              46.6%                   90 AREINHA--345  1   337.6   -66.6   334.2
                                              55.4%                  148 CAMPOS---FIC  1   127.2    17.6   124.7 1.004F
                                              42.6%                  149 VITORIA--345  1   306.4   -70.5   305.3
```

```
                                                 1.2%                 157 CAMP-CAP-345  1     0.0  -127.3   123.6
                                                55.3%                 175 CAMPOS---138  3   127.3    13.8   124.4
                                                55.4%                 211 CAMPOS--FIC2  2   127.0    18.0   124.6 1.004F
                                                43.5%                3966 MACAE----345  1  -341.7    27.8   332.9                41
                                                43.5%                3966 MACAE----345  2  -341.7    27.8   332.9                41
                                                43.5%                3966 MACAE----345  3  -342.1    29.2   333.4                41
 148    1  0   1.020     0.0     0.0     0.0     0.0     0.0     0.0
CAMPOS---FIC  -125.9     0.0     0.0     0.0     0.0     0.0     0.0
                                                55.7%                 147 CAMPOS---345  1  -127.2   -10.6   125.2
                                                57.2%                 175 CAMPOS---138  1   127.2    31.8   128.6
                                                27.7%                 192 CM-TER1-3C10  1     0.0   -21.2    20.8
 149  345  0   1.037     0.0     0.0     0.0     0.0     0.0     0.0
VITORIA--345  -134.4     0.0     0.0     0.0     0.0     0.0     0.0
                                                 5.7%                  90 AREINHA--345  1   -39.1   -16.3    40.9
                                                54.5%                 114 VITO-FIC-AT5  1   126.9     6.9   122.6 1.004F
                                                40.5%                 147 CAMPOS---345  1  -300.8     4.2   290.1
                                                54.2%                 150 VITO-FIC-AT1  1   126.3     6.5   122.0 1.004F
                                                16.0%                 151 VITOR--CI57%  1     0.0     9.9     9.6 1.050F
                                                54.2%                 152 VITO-FIC-AT2  1   126.3     6.5   122.0 1.004F
                                                56.4%                 153 VITO-FIC-AT3  1   131.5     6.8   127.0 1.004F
                                                59.3%                 158 VITO-FIC-AT4  1   138.1     7.1   133.4 1.004F
                                                39.2%                 385 OPRETO2--345  1  -309.2   -31.6   299.8                02
 150    1  0   1.031     0.0     0.0     0.0     0.0     0.0     0.0
VITO-FIC-AT1  -138.0     0.0     0.0     0.0     0.0     0.0     0.0
                                                54.4%                 149 VITORIA--345  1  -126.3     1.4   122.5
                                                54.3%                 177 VITORIA--138  1   125.9    -1.4   122.1
                                                 0.5%                 199 VIT-13.8-AT1  1     0.4     0.0     0.4
 151    1  0   0.980     0.0     0.0     0.0     0.0     0.0     0.0
VITOR--CI57%  -134.4     0.0     0.0     0.0     0.0     0.0     0.0
                                                16.8%                  45 VITORIA--1CS  1     0.0     9.8    10.1
                                                16.8%                 149 VITORIA--345  1     0.0    -9.8    10.1
 152    1  0   1.031     0.0     0.0     0.0     0.0     0.0     0.0
VITO-FIC-AT2  -138.0     0.0     0.0     0.0     0.0     0.0     0.0
                                                54.4%                 149 VITORIA--345  1  -126.3     1.4   122.5
                                                 0.0%                 154 VIT-13.8-AT2  1     0.0     0.0     0.0
                                                54.4%                 177 VITORIA--138  1   126.3    -1.4   122.5
```



```
X----------------- D A D O S  -  B A R R A -------------------------X------------ F L U X O S  -  C I R C U I T O S ------------X
 DA BARRA      TENSAO GERACAO INJ EQV  CARGA   ELO CC  SHUNT    MOTOR
 NUM. KV TIPO   MOD/     MW/     MW/     MW/     MW/   Mvar/     MW/
     NOME       ANG     Mvar    Mvar    Mvar    Mvar   EQUIV    Mvar  PARA BARRA                    FLUXOS
                                                FLUXO % SHUNT L         NUM.     NOME     NC     MW    Mvar  MVA/V_d   TAP  DEFAS TIE
X------------X-------X-------X-------X-------X-------X-------X-------X----X------------X--X-------X-------X-------X------X-----X---X

 153    1  0   1.032     0.0     0.0     0.0     0.0     0.0     0.0
VITO-FIC-AT3  -138.2     0.0     0.0     0.0     0.0     0.0     0.0
                                                56.7%                 149 VITORIA--345  1  -131.5     1.9   127.5
                                                 0.0%                 155 VIT-13.8-AT3  1     0.0     0.0     0.0
                                                56.7%                 177 VITORIA--138  1   131.5    -1.9   127.5
 154    1  0   1.031     0.0     0.0     0.0     0.0     0.0     0.0
VIT-13.8-AT2  -138.0     0.0     0.0     0.0     0.0     0.0     0.0
                                                 0.0%                 152 VITO-FIC-AT2  1     0.0     0.0     0.0 1.000F
 155    1  0   1.032     0.0     0.0     0.0     0.0     0.0     0.0
VIT-13.8-AT3  -138.2     0.0     0.0     0.0     0.0     0.0     0.0
                                                 0.0%                 153 VITO-FIC-AT3  1     0.0     0.0     0.0 1.000F
 156    1  0   1.031     0.0     0.0     0.0     0.0     0.0     0.0
```

```
 VIT-13.8-AT4  -137.8     0.0     0.0     0.0     0.0     0.0     0.0
                                                 0.0%                    158 VITO-FIC-AT4  1     0.0     0.0     0.0 1.000F
  157  345  0   1.030     0.0     0.0     0.0     0.0   127.3     0.0
 CAMP-CAP-345  -122.8     0.0     0.0     0.0     0.0     0.0     0.0
                                                 1.2%                    147 CAMPOS---345  1     0.0   127.3   123.6
  158    1  0   1.031     0.0     0.0     0.0     0.0     0.0     0.0
 VITO-FIC-AT4  -137.8     0.0     0.0     0.0     0.0     0.0     0.0
                                                59.5%                    149 VITORIA--345  1  -138.1     1.0   133.9
                                                 0.0%                    156 VIT-13.8-AT4  1     0.0     0.0     0.0
                                                59.5%                    177 VITORIA--138  1   138.1    -1.0   133.9
  159    1  0   1.091     0.0     0.0     0.0     0.0     0.0     0.0
 JAC-13.8-R30  -114.0     0.0     0.0     0.0     0.0     0.0     0.0
                                                 0.0%                    137 JAC-FIC-TR2A  1     0.0     0.0     0.0 1.000F
  160    1  0   1.049     0.0     0.0     0.0     0.0     0.0     0.0
 JAC-13.8-R60  -114.2     0.0     0.0     0.0     0.0     0.0     0.0
                                                 0.0%                    166 JAC-FIC-TR1B  1     0.0     0.0     0.0 1.000F
  161    1  0   1.013     0.0     0.0     0.3     0.0     0.0     0.0
 MOGI-----230   -91.2     0.0     0.0     0.0     0.0     0.0     0.0
                                                30.9%                    129 MOGI-----345  1  -149.8    45.0   154.3 0.969*
                                                30.9%                    129 MOGI-----345  2  -149.8    45.0   154.3 0.969*
                                                 0.0%                    450 MOGI-Q---230  1     0.0     0.0     0.0                04
                                                41.1%                    451 AVillar-Y230  1    55.8  -113.7   125.0                04
                                                79.4%                    454 SAO JOSE-230  1   243.3    23.7   241.3                04
CEPEL - CENTRO DE PESQUISAS DE ENERGIA ELETRICA - PROGRAMA DE ANALISE DE REDES - V08MAR05A                                PAG.  34

ANUAL 06/07 * SETEMBRO 2006 PESADA S/SE 19H N/NE 19H * ANAT0 - FSE - C13
RELATORIO COMPLETO DO SISTEMA * AREA  1 * *              FURNAS              *

X----------------- D A D O S  -  B A R R A ------------------------X------------ F L U X O S  -  C I R C U I T O S ------------X
 DA BARRA      TENSAO GERACAO INJ EQV  CARGA   ELO CC  SHUNT    MOTOR
 NUM. KV TIPO   MOD/     MW/     MW/     MW/     MW/   Mvar/     MW/
     NOME       ANG     Mvar    Mvar    Mvar    Mvar   EQUIV    Mvar  PARA BARRA                    FLUXOS
                                                FLUXO % SHUNT L         NUM.     NOME     NC     MW    Mvar  MVA/V_d   TAP  DEFAS TIE
X------------X-------X-------X-------X-------X-------X-------X-------X----X------------X--X-------X-------X-------X------X-----X---X

  162    1  0   1.023     0.0     0.0     0.0     0.0     0.0     0.0
 CAMPINAS-TR1   -94.2     0.0     0.0     0.0     0.0     0.0     0.0
                                          SUP  111.1%                    123 CAMPINAS-345  1  -169.8   -14.1   166.6
                                                 0.0%                    163 CAMP13.8-R50  1     0.0     0.0     0.0
                                          SUP  111.1%                    171 CAMPINAS-138  1   169.8    14.1   166.6
  163    1  0   1.023     0.0     0.0     0.0     0.0     0.0     0.0
 CAMP13.8-R50   -94.2     0.0     0.0     0.0     0.0     0.0     0.0
                                                 0.0%                    162 CAMPINAS-TR1  1     0.0     0.0     0.0 1.000F
  164    1  0   1.060     0.0     0.0     0.0     0.0     0.0     0.0
 PC--FIC-AT02   -94.2     0.0     0.0     0.0     0.0     0.0     0.0
                                                71.7%                    120 P.CALDAS-345  2  -104.1   -46.5   107.6
                                                99.4%                    165 PCAL13.8-R50  2     0.0    52.6    49.7
                                                65.6%                    170 P.CALDAS-138  2   104.1    -6.1    98.4
  165    1  0   0.994     0.0     0.0     0.0     0.0   -49.4     0.0
 PCAL13.8-R50   -94.2     0.0     0.0     0.0     0.0     0.0     0.0
                                                99.4%                    164 PC--FIC-AT02  2     0.0   -49.4    49.7 1.000F
  166    1  0   1.049     0.0     0.0     0.0     0.0     0.0     0.0
 JAC-FIC-TR1B  -114.2     0.0     0.0     0.0     0.0     0.0     0.0
                                                46.0%                     98 JACARE-2-138  1   108.5    -3.3   103.4
                                                46.0%                    144 JACAREP--345  1  -108.5     3.3   103.4
                                                 0.0%                    160 JAC-13.8-R60  1     0.0     0.0     0.0
  167    1  0   1.049     0.0     0.0     0.0     0.0     0.0     0.0
 JAC-13.8-R60  -114.2     0.0     0.0     0.0     0.0     0.0     0.0
                                                 0.0%                    135 JAC-FIC-TR1A  1     0.0     0.0     0.0 1.000F
  168    1  0   1.030     0.0     0.0     0.0     0.0     0.0     0.0
```

```
 BANDEI-2-230   -97.9     0.0     0.0     0.0     0.0     0.0     0.0
                                              42.7%                 218 BANDEIRA-345  3  -103.8   -63.0   117.9 1.035F
                                               1.4%                 226 BANDEIRA-230  1   -98.4  -106.6   140.8
                                              33.5%                 760 ANHANGUE-230  1   101.1    84.8   128.1              12
                                              33.5%                 760 ANHANGUE-230  2   101.1    84.8   128.1              12
CEPEL - CENTRO DE PESQUISAS DE ENERGIA ELETRICA - PROGRAMA DE ANALISE DE REDES - V08MAR05A                              PAG.  35

ANUAL 06/07 * SETEMBRO 2006 PESADA S/SE 19H N/NE 19H * ANAT0 - FSE - C13
RELATORIO COMPLETO DO SISTEMA * AREA  1 * *              FURNAS              *

X----------------- D A D O S  -  B A R R A -------------------------X------------ F L U X O S  -  C I R C U I T O S ------------X
 DA BARRA      TENSAO GERACAO INJ EQV  CARGA   ELO CC  SHUNT    MOTOR
 NUM. KV TIPO   MOD/     MW/     MW/    MW/    MW/   Mvar/     MW/
     NOME       ANG     Mvar    Mvar   Mvar   Mvar   EQUIV    Mvar  PARA BARRA                    FLUXOS
                                              FLUXO % SHUNT L         NUM.     NOME     NC     MW    Mvar  MVA/V_d   TAP  DEFAS TIE
X------------X-------X-------X-------X-------X-------X-------X-------X----X------------X--X-------X-------X-------X------X-----X---X

  169  138  0   1.030     0.0     0.0     0.0     0.0     0.0     0.0
 S.JOSE---138  -111.0     0.0     0.0     0.0     0.0     0.0     0.0
                                              59.7%                 108 S.JOSE---500 13  -360.6   -79.1   358.5 0.985*
                                              59.7%                 108 S.JOSE---500 14  -360.6   -79.1   358.5 0.985*
                                              60.2%                 172 IMBARIE--138  1    87.0    24.9    87.8
                                              56.4%                 172 IMBARIE--138  2    81.5    23.3    82.3
                                              56.9%                 264  Tap-INMETRO  1   166.9    21.0   163.4              09
                                              45.4%                 271 MERITI---138  1   151.4     4.2   147.0              09
                                              44.4%                1604 V.TELES--138  1   143.1    38.6   143.9              09
                                              56.4%                1605 CAXIAS---138  1   182.8    44.8   182.7              09
                                              79.6%                1717 MAGE     138  1   131.1     1.8   127.3              10
                                              79.6%                1717 MAGE     138  2   131.1     1.8   127.3              10
                                               3.4%                4200 S.JOSE2--138  1  -353.6    -0.1   343.3
                                               0.0%                4202 TERMR2-2-138  1     0.0    -2.3     2.2              41
  170  138  0   1.030     0.0     0.0     0.0     0.0     0.0     0.0
 P.CALDAS-138   -93.6     0.0     0.0     0.0     0.0     0.0     0.0
                                              74.3%                 120 P.CALDAS-345  1  -105.6   -45.0   111.5 1.009*
                                              73.5%                 120 P.CALDAS-345  3  -104.5   -44.5   110.3 1.009*
                                              78.9%                 120 P.CALDAS-345  4  -112.2   -47.8   118.4 1.009*
                                              67.4%                 164 PC--FIC-AT02  2  -104.1     5.1   101.2 0.972*
                                              19.8%                 364 PCALDAS1-138  1    98.6    27.4    99.4              02
                                               9.8%                 365 PCALDAS2-138  1    49.5    11.3    49.3              02
                                              19.9%                 705 SJBVIS-2-138  1    24.8    -0.7    24.1              06
                                              19.9%                 705 SJBVIS-2-138  2    24.8    -0.7    24.1              06
                                               2.2%                4110 ALCOA----138  1   207.0    88.2   218.5              41
                                               6.6%                4111 DME------138  1    10.9     3.3    11.0              41
                                               6.6%                4111 DME------138  2    10.9     3.3    11.0              41
  171    1  0   1.015     0.0     0.0     1.0     0.0     0.0     0.0
 CAMPINAS-138   -94.8     0.0     0.0     0.0     0.0     0.0     0.0
                                              SUP  111.5%                 123 CAMPINAS-345  2  -169.3   -11.3   167.3 0.989*
                                              SUP  107.9%                 123 CAMPINAS-345  3  -163.8   -11.0   161.8 0.989*
                                              SUP  112.1%                 123 CAMPINAS-345  4  -170.3   -11.4   168.2 0.989*
                                              SUP  111.8%                 162 CAMPINAS-TR1  1  -169.8   -12.1   167.8 0.993*
                                              88.5%                2241 TANQUINHO138  1   134.4     9.2   132.8              07
                                              88.5%                2241 TANQUINHO138  2   134.4     9.2   132.8              07
                                              88.5%                2241 TANQUINHO138  3   134.4     9.2   132.8              07
                                              88.5%                2241 TANQUINHO138  4   134.4     9.2   132.8              07
                                              88.5%                2241 TANQUINHO138  5   134.4     9.2   132.8              07
CEPEL - CENTRO DE PESQUISAS DE ENERGIA ELETRICA - PROGRAMA DE ANALISE DE REDES - V08MAR05A                              PAG.  36

ANUAL 06/07 * SETEMBRO 2006 PESADA S/SE 19H N/NE 19H * ANAT0 - FSE - C13
RELATORIO COMPLETO DO SISTEMA * AREA  1 * *              FURNAS              *
```

```
X----------------- D A D O S  -  B A R R A ------------------------X------------ F L U X O S  -  C I R C U I T O S ------------X
 DA BARRA      TENSAO GERACAO INJ EQV  CARGA   ELO CC  SHUNT    MOTOR
 NUM. KV TIPO   MOD/     MW/     MW/     MW/     MW/   Mvar/     MW/
     NOME       ANG     Mvar    Mvar    Mvar    Mvar   EQUIV    Mvar  PARA BARRA                    FLUXOS
                                                FLUXO % SHUNT L         NUM.     NOME     NC     MW    Mvar  MVA/V_d   TAP  DEFAS TIE
X------------X-------X-------X-------X-------X-------X-------X-------X----X------------X--X-------X-------X-------X------X-----X---X

  172    1  0   1.016     0.0     0.0     0.0     0.0     0.0     0.0
 IMBARIE--138  -112.6     0.0     0.0     0.0     0.0     0.0     0.0
                                                 0.0%                   116 IMBARIE-TAP   1     0.0     0.0     0.0
                                                60.4%                   169 S.JOSE---138  1   -86.5   -23.2    88.1
                                                56.6%                   169 S.JOSE---138  2   -81.1   -21.8    82.6
                                                55.3%                  1740 IMBARIE  138  1    48.3     7.7    48.1              10
                                                54.2%                  1743 C.ELISEOS--1  1    57.9    18.0    59.7              10
                                                57.5%                  1744 C.ELISEOS--2  1    61.3    19.3    63.3              10
  173  138  0   1.050     0.0     0.0     0.0     0.0     0.0     0.0
 ADRIANO--138  -113.3     0.0     0.0     0.0     0.0     0.0     0.0
                                                67.0%                   116 IMBARIE-TAP   1   101.0    18.9    97.9
                                                58.1%                   133 ADRIAN-F-T1D  1  -134.9   -24.5   130.6 1.022*
                                                58.1%                   143 ADRIAN-F-T2B  1  -134.9   -24.5   130.6 1.022*
                                                65.2%                   145 ADRIAN-F-T1B  1  -151.6   -27.5   146.8 1.022*
                                                68.2%                   146 ADRIAN-F-T2A  1  -158.4   -28.8   153.3 1.022*
                                                 0.8%                  1664 CEPEL----138  1     0.3    -0.2     0.4              09
                                                 1.3%                  1664 CEPEL----138  2     0.3    -0.6     0.6              09
                                                73.6%                  1717 MAGE     138  1    90.0    14.6    86.9              10
                                                73.6%                  1717 MAGE     138  2    90.0    14.6    86.9              10
                                                60.9%                  1730 ALCANTARA138  1    91.8    16.5    88.8              10
                                                64.4%                  1731 GUAXINDIB138  1    97.0    18.0    94.0              10
                                                73.0%                  1742 P.ANGEL 138   1   109.3    23.6   106.5              10
  174    1  0   0.990     0.0     0.0     0.0     0.0     0.0     0.0
 R.LEAO---138  -127.7     0.0     0.0     0.0     0.0     0.0     0.0
                                                23.5%                   175 CAMPOS---138  1   -17.1   -21.5    27.7
                                                48.7%                  1717 MAGE     138  1   -56.5     5.9    57.4              10
                                                48.7%                  1717 MAGE     138  2   -56.5     5.9    57.4              10
                                                12.3%                  1728 MACAE----138  1     0.0   -14.4    14.5              10
                                                38.2%                  1745 R.LEAO   138  1    65.1    12.1    66.8              10
                                                38.2%                  1745 R.LEAO   138  2    65.1    12.1    66.8              10
  175  138  0   1.051     0.0     0.0     0.2     0.0     0.0     0.0
 CAMPOS---138  -125.8     0.0     0.0     0.0     0.0     0.0     0.0
                                                54.0%                   147 CAMPOS---345  3  -127.3    -7.2   121.4 1.024*
                                                55.5%                   148 CAMPOS---FIC  1  -127.2   -32.2   124.9 1.030*
                                                18.8%                   174 R.LEAO---138  1    17.5    15.5    22.2
                                                56.8%                   211 CAMPOS--FIC2  2  -127.0   -43.6   127.8 1.030*
                                                20.7%                  1728 MACAE----138  1    19.6    16.5    24.4              10
                                                80.4%                  1760 UTEC     138  1    94.4    32.0    94.9              10
                                                80.4%                  1760 UTEC     138  2    94.4    32.0    94.9              10
                                                62.9%                  2614 CACHOEIRO138  1    77.7    -6.5    74.2              11
                                                62.9%                  2614 CACHOEIRO138  2    77.7    -6.5    74.2              11
CEPEL - CENTRO DE PESQUISAS DE ENERGIA ELETRICA - PROGRAMA DE ANALISE DE REDES - V08MAR05A                                PAG.  37

ANUAL 06/07 * SETEMBRO 2006 PESADA S/SE 19H N/NE 19H * ANAT0 - FSE - C13
RELATORIO COMPLETO DO SISTEMA * AREA  1 * *              FURNAS              *

X----------------- D A D O S  -  B A R R A ------------------------X------------ F L U X O S  -  C I R C U I T O S ------------X
 DA BARRA      TENSAO GERACAO INJ EQV  CARGA   ELO CC  SHUNT    MOTOR
 NUM. KV TIPO   MOD/     MW/     MW/     MW/     MW/   Mvar/     MW/
     NOME       ANG     Mvar    Mvar    Mvar    Mvar   EQUIV    Mvar  PARA BARRA                    FLUXOS
                                                FLUXO % SHUNT L         NUM.     NOME     NC     MW    Mvar  MVA/V_d   TAP  DEFAS TIE
X------------X-------X-------X-------X-------X-------X-------X-------X----X------------X--X-------X-------X-------X------X-----X---X
```

```
 176    1  0   1.018     0.0     0.0     0.0     0.0     0.0     0.0
 CAMPINA2-FIC   -90.0     0.0     0.0     0.0     0.0     0.0     0.0
                                              56.1%                 103 CAMPINAS-500  1  -319.4    -9.6   314.0
                                              56.1%                 123 CAMPINAS-345  1   319.4     9.6   314.0
                                               0.0%                 186 CAMPINAS2-13  1     0.0     0.0     0.0
 177  138  0   1.030     0.0     0.0     0.0     0.0     0.0     0.0
 VITORIA--138  -137.6     0.0     0.0     0.0     0.0     0.0     0.0
                                              54.7%                 114 VITO-FIC-AT5  1  -126.9     0.3   123.2 0.999*
                                              54.3%                 150 VITO-FIC-AT1  1  -125.9     0.6   122.2 0.999*
                                              54.5%                 152 VITO-FIC-AT2  1  -126.3     0.6   122.6 0.999*
                                              56.7%                 153 VITO-FIC-AT3  1  -131.5     0.6   127.6 0.999*
                                              59.6%                 158 VITO-FIC-AT4  1  -138.1     0.7   134.0 0.999*
                                              70.0%                2666 PITANGA--138  1   162.2    -0.7   157.4              11
                                              70.0%                2666 PITANGA--138  2   162.2    -0.7   157.4              11
                                              70.0%                2666 PITANGA--138  3   162.2    -0.7   157.4              11
                                              70.0%                2666 PITANGA--138  4   162.2    -0.7   157.4              11
 178  138  0   1.030     0.0     0.0     0.0     0.0     0.0     0.0
 GRAJAU---138  -111.6     0.0     0.0     0.0     0.0     0.0     0.0
                                              41.4%                  98 JACARE-2-138  1    89.5    25.1    90.2
                                              56.6%                 107 GRAJAU---500 56  -349.1    16.8   339.4 0.952F
                                              56.6%                 107 GRAJAU---500 58  -349.1    16.8   339.4 0.952F
                                              56.3%                 110 GR--FIC1-T52 52  -348.1     3.7   338.0 1.000F
                                              56.3%                 179 GR--FIC2-T54 54  -348.1     3.7   338.0 1.000F
                                              44.7%                 283 T.SUL----138  1    98.8   -17.7    97.4              09
                                              44.7%                 283 T.SUL----138  2    98.8   -17.7    97.4              09
                                              44.7%                 283 T.SUL----138  3    98.8   -17.7    97.4              09
                                              44.7%                 283 T.SUL----138  4    98.8   -17.7    97.4              09
                                              76.4%                1642 PIEDADE--138  1   163.9    51.0   166.6              09
                                              80.5%                1643 B.MATO---138  1   172.4    53.9   175.4              09
                                              39.4%                1649 LEOPOLDO-138  1    85.2   -23.6    85.9              09
                                              36.5%                1650 R.COMPRI-138  1    78.6   -23.6    79.6              09
                                              28.7%                1651 J.BOTA-A-138  1    59.3   -25.4    62.6              09
                                              28.7%                1652 J.BOTA-B-138  1    59.3   -25.4    62.6              09
                                              39.0%                1655 ACAMPISTA138  1    83.4   -26.5    84.9              09
                                              41.7%                1670 MANGUEIRA138  1    92.3   -15.2    90.8              09
                                              54.4%                3958 CASCADURA138  1   115.6    39.6   118.6              09
 179    1  0   1.030     0.0     0.0     0.0     0.0     0.0     0.0
 GR--FIC2-T54  -111.7     0.0     0.0     0.0     0.0     0.0     0.0
                                               5.3%                  38 GRAJAU-2-1CS 54     1.3   -10.8    10.6
                                              56.6%                 107 GRAJAU---500 54  -349.4    15.5   339.6
                                              56.3%                 178 GRAJAU---138 54   348.1    -4.6   338.0
```



```
X----------------- D A D O S  -  B A R R A -------------------------X------------ F L U X O S  -  C I R C U I T O S ------------X
 DA BARRA      TENSAO GERACAO INJ EQV  CARGA   ELO CC  SHUNT    MOTOR
 NUM. KV TIPO   MOD/     MW/     MW/     MW/     MW/   Mvar/     MW/
     NOME       ANG     Mvar    Mvar    Mvar    Mvar   EQUIV    Mvar  PARA BARRA                    FLUXOS
                                                FLUXO % SHUNT L         NUM.     NOME     NC     MW    Mvar  MVA/V_d   TAP  DEFAS TIE
X------------X-------X-------X-------X-------X-------X-------X-------X----X------------X--X-------X-------X-------X------X-----X---X

 180  138  0   1.011     0.0     0.0     0.0     0.0   204.3     0.0
 JACAREP--138  -113.9     0.0     0.0     0.0     0.0     0.0     0.0
                                               0.7%                  98 JACARE-2-138  1   -71.8     0.5    71.0
                                              67.6%                 137 JAC-FIC-TR2A  1  -115.4   101.5   152.1 0.928*
                                              62.0%                 144 JACAREP--345  1  -110.8    87.1   139.5 0.928*
                                              12.7%                 184 S.CRUZ---138  1    18.2    -4.3    18.5
                                              18.1%                 263 TAQUARA--138  1    38.2    11.1    39.4              09
```

```
                                                                 16.6%                 277 ZIN------138  1    32.1    -5.4    32.2                09
                                                                 27.3%                 282 RECREIO--138  1    74.0     5.5    73.5                09
                                                                 17.0%                1641 V.VALQUE-138  1    37.2     3.0    37.0                09
                                                                  9.3%                1644 PDAGUA-A      1    -3.6   -20.3    20.4                09
                                                                  8.8%                1646 B.TIJUCA-A    1    19.3    -2.3    19.2                09
                                                                 32.0%                1695 CURICICA-138  1    82.4    27.7    86.0                09
 181    1  0   1.037     0.0     0.0     0.0     0.0     0.0     0.0
ANGRA-DEF138  -104.9     0.0     0.0     0.0     0.0     0.0     0.0
                                                                 61.8%                 105 ANGRA----500  1  -256.1     6.0   247.1 0.955*
                                                                 61.8%                 185 ANGRA----138  1   256.1    -6.0   247.1 1.000F
 182    1  0   0.993     0.0     0.0     0.0     0.0     0.0     0.0
FUNIL----138  -108.3     0.0     0.0     0.0     0.0     0.0     0.0
                                                                 15.0%                  14 FUNIL-1--1GR  1   -39.9    -5.0    40.4 1.000F
                                                                 98.3%                 183 C.PAULIS-138  1  -142.4     4.0   143.5
                                                                  1.2%                 191 FUNIL--2-138  1   122.6    -3.2   123.5
                                                                 41.2%                 274 V.REDOND-138  1    59.7     4.1    60.2                09
 183    1  0   1.030     0.0     0.0     0.0     0.0   159.1     0.0
C.PAULIS-138   -98.7     0.0     0.0     0.0     0.0     0.0     0.0
                                                                 54.1%                 104 C.PAULIS-500 57  -123.6    64.4   135.4 0.920*
                                                                 54.1%                 104 C.PAULIS-500 59  -123.6    64.4   135.4 0.920*
                                                                 98.2%                 182 FUNIL----138  1   146.6    16.8   143.3
                                                                 67.6%                 274 V.REDOND-138  1   100.7    13.6    98.6                09
 184  138  0   1.011     0.0     0.0     0.0     0.0     0.0     0.0
S.CRUZ---138  -114.9     0.0     0.0     0.0     0.0     0.0     0.0
                                                                  0.0%                  30 SCRUZ-19-000  1     0.0     0.0     0.0 1.000F
                                                                  0.0%                  31 SCRUZ-13-000  1     0.0     0.0     0.0 1.045F
                                                                 62.7%                  32 SCRUZ-16-1GR  1  -125.0    21.2   125.5 1.000F
                                                                 12.4%                 180 JACAREP--138  1   -18.1     1.9    18.0
                                                                 46.3%                 185 ANGRA----138  1   -66.9     1.2    66.2
                                                                 35.9%                 276 BRISAMAR-138  1   -34.7     5.4    34.8                09
                                                                 48.7%                 276 BRISAMAR-138  2   -45.7    14.0    47.3                09
                                                                 36.8%                 277 ZIN------138  1    54.0    -5.3    53.7                09
                                                                 13.5%                 278 PALMARES-138  1    43.4   -26.1    50.1                09
                                                                 13.5%                 278 PALMARES-138  2    43.4   -26.1    50.1                09
                                                                 21.4%                3988 ZIN1--TAP138  1    79.3     9.5    79.0                09
                                                                 18.9%                3989 ZIN2--TAP138  1    70.4     4.4    69.8                09
CEPEL - CENTRO DE PESQUISAS DE ENERGIA ELETRICA - PROGRAMA DE ANALISE DE REDES - V08MAR05A                                          PAG.  39

ANUAL 06/07 * SETEMBRO 2006 PESADA S/SE 19H N/NE 19H * ANAT0 - FSE - C13
RELATORIO COMPLETO DO SISTEMA * AREA  1 * *              FURNAS              *

X------------------ D A D O S  -  B A R R A -------------------------X------------- F L U X O S  -  C I R C U I T O S -------------X
 DA BARRA      TENSAO GERACAO INJ EQV  CARGA   ELO CC  SHUNT    MOTOR
 NUM. KV TIPO   MOD/     MW/     MW/     MW/     MW/   Mvar/     MW/
     NOME       ANG     Mvar    Mvar    Mvar    Mvar   EQUIV    Mvar  PARA BARRA                    FLUXOS
                                                FLUXO % SHUNT L         NUM.     NOME     NC     MW    Mvar  MVA/V_d   TAP  DEFAS TIE
X------------X-------X-------X-------X-------X-------X-------X-------X----X------------X--X-------X-------X-------X------X-----X---X

 185  138  0   1.038     0.0     0.0     3.0     0.0    32.3     0.0
ANGRA----138  -106.2     0.0     0.0     1.4     0.0     0.0     0.0
                                                                 61.8%                 181 ANGRA-DEF138  1  -256.1    12.0   247.1
                                                                 46.3%                 184 S.CRUZ---138  1    68.6     2.0    66.1
                                                                 70.2%                1771 JACUACANG138  1    85.6     8.2    82.8                10
                                                                 43.7%                1772 ITAORNA  138  1    18.8     6.7    19.2                10
                                                                 79.6%                1773 ANGRA    138  1    80.1     2.0    77.2                10
 186    1  0   1.018     0.0     0.0     0.0     0.0     0.0     0.0
CAMPINAS2-13   -90.0     0.0     0.0     0.0     0.0     0.0     0.0
                                                                  0.0%                 176 CAMPINA2-FIC  1     0.0     0.0     0.0 1.000F
 187    1  0   1.049     0.0     0.0     0.0     0.0     0.0     0.0
M.MORAES-138   -91.0     0.0     0.0     0.0     0.0     0.0     0.0
```

```
                                                 68.2%                 24 M.MOR.B--4GR  1  -142.8    -7.7   136.4 1.075F
                                                 77.3%                132 M.MORAES-FIC  1   -82.6   -89.1   115.9 1.050S
                                                 42.7%                318 CASSIA---138  1    55.1    10.0    53.4              02
                                                 43.3%                318 CASSIA---138  2    55.9     9.7    54.1              02
                                                 16.6%                330 JAGUARA--138  1    14.2    -8.8    15.9              02
                                                 20.0%               2257 BATATAIS-138  1    24.6    10.7    25.6              07
                                                 28.7%               2264 FRANCA---138  1    20.5    29.8    34.5              07
                                                 27.2%               2264 FRANCA---138  2    20.5    29.8    34.5              07
                                                 28.3%               2333 DIAMANTE-138  1    34.6    15.6    36.2              07
 188    1  0   1.030     0.0     0.0     0.0     0.0     0.0     0.0
BGERAL-TR2e2  -106.8     0.0     0.0     0.0     0.0     0.0     0.0
                                                  1.7%                207 BGT2e2-CI20%  1     0.0     0.4     0.3
                                                 87.7%                221 B.GERAL-34.5  1    27.0     1.8    26.3
                                                 87.8%                227 B.GERAL--230  1   -27.0    -2.2    26.3
 189    1  0   1.030     0.0     0.0     0.0     0.0     0.0     0.0
BGERAL-TR1e2  -106.8     0.0     0.0     0.0     0.0     0.0     0.0
                                                  1.8%                208 BGT1e2-CI20%  1     0.0     0.4     0.4
                                                 87.1%                221 B.GERAL-34.5  1    26.9     1.8    26.1
                                                 87.2%                227 B.GERAL--230  1   -26.9    -2.2    26.2
 190  138  0   1.027     0.0     0.0     0.0     0.0     0.0     0.0
PCOLOMBI-138   -83.3     0.0     0.0     0.0     0.0     0.0     0.0
                                                 70.9%                 28 P.COLOMB-4GR  1  -260.4   -29.5   255.3 1.000F
                                                 17.9%                322 FRUTAL---138  1    22.3     5.6    22.4              02
                                                 34.1%               2261 CATU-----138  1    47.4     4.2    46.4              07
                                                 31.3%               2301 BARRETOS-138  1    40.1    -1.6    39.1              07
                                                 57.8%               2310 BARRETOS2138  1   109.2    22.6   108.6              07
                                                 32.2%               2316 COLOMBIA-138  1    41.4    -1.3    40.3              07
CEPEL - CENTRO DE PESQUISAS DE ENERGIA ELETRICA - PROGRAMA DE ANALISE DE REDES - V08MAR05A                              PAG.  40

ANUAL 06/07 * SETEMBRO 2006 PESADA S/SE 19H N/NE 19H * ANAT0 - FSE - C13
RELATORIO COMPLETO DO SISTEMA * AREA  1 * *              FURNAS              *

X----------------- D A D O S  -  B A R R A ------------------------X------------ F L U X O S  -  C I R C U I T O S ------------X
 DA BARRA      TENSAO GERACAO INJ EQV  CARGA   ELO CC  SHUNT    MOTOR
 NUM. KV TIPO   MOD/     MW/     MW/     MW/     MW/   Mvar/     MW/
     NOME       ANG     Mvar    Mvar    Mvar    Mvar   EQUIV    Mvar  PARA BARRA                    FLUXOS
                                                FLUXO % SHUNT L         NUM.     NOME     NC     MW    Mvar  MVA/V_d   TAP  DEFAS TIE
X------------X-------X-------X-------X-------X-------X-------X-------X----X------------X--X-------X-------X-------X------X-----X---X

 191    1  0   0.993     0.0     0.0     0.0     0.0     0.0     0.0
FUNIL--2-138  -108.3     0.0     0.0     0.0     0.0     0.0     0.0
                                                 52.3%                 15 FUNIL-2--2GR  1   -82.0   -44.8    94.1 1.000F
                                                  1.2%                182 FUNIL----138  1  -122.6     3.2   123.5
                                                 49.7%                273 SAUDADE--138  1    70.3     6.8    71.1              09
                                                 97.7%               1619 R.SAUDOSO138  1   134.3    34.8   139.7              09
 192    1  0   1.040     0.0     0.0     0.0     0.0    21.6     0.0
CM-TER1-3C10  -125.9     0.0     0.0     0.0     0.0     0.0     0.0
                                                 27.7%                148 CAMPOS---FIC  1     0.0    21.6    20.8 1.000F
                                                  0.0%                193 CM-TER1-2R25  1     0.0     0.0     0.0
 193    1  0   1.040     0.0     0.0     0.0     0.0     0.0     0.0
CM-TER1-2R25  -125.9     0.0     0.0     0.0     0.0     0.0     0.0
                                                  0.0%                192 CM-TER1-3C10  1     0.0     0.0     0.0
 194    1  0   0.953     0.0     0.0     0.0     0.0   -45.4     0.0
ADRI-T55-REA  -111.0     0.0     0.0     0.0     0.0     0.0     0.0
                                                 25.5%                142 ADRIAN-F-T55  1     0.0   -45.4    47.7 1.000F
 195    1  0   1.036     0.0     0.0     2.3     0.0     0.0     0.0
ADRI-T53-CAP  -110.7     0.0     0.0     0.0     0.0     0.0     0.0
                                                  1.2%                141 ADRIAN-F-T53  1    -2.3     0.0     2.2 1.000F
 196    1  0   1.018     0.0     0.0     0.0     0.0     0.0     0.0
CAMPINAS13.8   -90.0     0.0     0.0     0.0     0.0     0.0     0.0
```

```
                                                                0.0%                  124 CAMPINAS-FIC  1     0.0     0.0     0.0 1.000F
 197    1  0   1.036     0.0     0.0     0.0     0.0     0.0     0.0
ADRI-T57-REA  -110.7     0.0     0.0     0.0     0.0     0.0     0.0
                                                                0.0%                  139 ADRIAN-F-T57  1     0.0     0.0     0.0 1.000F
 198    1  0   1.039     0.0     0.0     1.2     0.0     0.0     0.0
POCOS---13.8   -90.8     0.0     0.0     0.0     0.0     0.0     0.0
                                                                0.3%                  121 PC--FIC-AT51  1    -1.2     0.0     1.1 1.000F
 199    1  0   1.031     0.0     0.0     0.4     0.0     0.0     0.0
VIT-13.8-AT1  -138.0     0.0     0.0     0.0     0.0     0.0     0.0
                                                                0.5%                  150 VITO-FIC-AT1  1    -0.4     0.0     0.4 1.000F
 200    1  0   1.046     0.0     0.0     0.0     0.0     0.0     0.0
UCAMPOS-FIC1  -129.6     0.0     0.0     0.0     0.0     0.0     0.0
                                                               26.1%                  201 UT-UTEC--1MQ  1    -1.8     5.1     5.2 1.000F
                                                               70.5%                 1760 UTEC     138  1   -14.7    -0.2    14.1               10
                                                               82.7%                 1761 UTEC      69  1    16.6    -4.9    16.5               10
CEPEL - CENTRO DE PESQUISAS DE ENERGIA ELETRICA - PROGRAMA DE ANALISE DE REDES - V08MAR05A                                          PAG.  41

ANUAL 06/07 * SETEMBRO 2006 PESADA S/SE 19H N/NE 19H * ANAT0 - FSE - C13
RELATORIO COMPLETO DO SISTEMA * AREA  1 * *              FURNAS             *

X----------------- D A D O S  -  B A R R A ------------------------X------------ F L U X O S  -  C I R C U I T O S ------------X
 DA BARRA      TENSAO GERACAO INJ EQV  CARGA   ELO CC  SHUNT    MOTOR
 NUM. KV TIPO   MOD/     MW/     MW/     MW/     MW/   Mvar/     MW/
     NOME       ANG     Mvar    Mvar    Mvar    Mvar   EQUIV    Mvar  PARA BARRA                    FLUXOS
                                                FLUXO % SHUNT L         NUM.     NOME     NC     MW    Mvar  MVA/V_d   TAP  DEFAS TIE
X------------X-------X-------X-------X-------X-------X-------X-------X----X------------X--X-------X-------X-------X------X-----X---X

 201    1  1   1.018     3.0     0.0     1.2     0.0     0.0     0.0
UT-UTEC--1MQ  -129.1    -5.0     0.0     0.0     0.0     0.0     0.0
                                                               26.1%                  200 UCAMPOS-FIC1  1     1.8    -5.0     5.2
 202    1  0   1.045     0.0     0.0     0.0     0.0     0.0     0.0
UCAMPOS-FIC2  -129.6     0.0     0.0     0.0     0.0     0.0     0.0
                                                                5.5%                  203 UCAMPOS--OMQ  1     1.2     0.0     1.1
                                                               70.2%                 1760 UTEC     138  1   -14.7    -0.3    14.0               10
                                                               64.7%                 1761 UTEC      69  1    13.5     0.3    12.9               10
 203    1  0   1.045     0.0     0.0     1.2     0.0     0.0     0.0
UCAMPOS--OMQ  -130.0     0.0     0.0     0.0     0.0     0.0     0.0
                                                                5.5%                  202 UCAMPOS-FIC2  1    -1.2     0.0     1.1
 204    1  0   1.026     0.0     0.0     0.0     0.0     0.0     0.0
ADRIAN-T-T1B  -113.5     0.0     0.0     0.0     0.0     0.0     0.0
                                                                0.0%                  145 ADRIAN-F-T1B  1     0.0     0.0     0.0 1.000F
 205    1  0   1.025     0.0     0.0     0.0     0.0     0.0     0.0
ADRIAN-T-T2A  -113.8     0.0     0.0     0.0     0.0     0.0     0.0
                                                                0.0%                  146 ADRIAN-F-T2A  1     0.0     0.0     0.0 1.000F
 206    1  0   1.027     0.0     0.0     0.0     0.0     0.0     0.0
ADRIAN-T-T25  -113.3     0.0     0.0     0.0     0.0     0.0     0.0
                                                                0.0%                  143 ADRIAN-F-T2B  1     0.0     0.0     0.0 1.000F
 207    1  0   1.030     0.0     0.0     0.0     0.0     0.0     0.0
BGT2e2-CI20%  -106.8     0.0     0.0     0.0     0.0     0.0     0.0
                                                                1.7%                   39 B.GERAL2-1CS  1     0.0     0.4     0.3
                                                                1.7%                  188 BGERAL-TR2e2  1     0.0    -0.4     0.3
 208    1  0   1.030     0.0     0.0     0.0     0.0     0.0     0.0
BGT1e2-CI20%  -106.8     0.0     0.0     0.0     0.0     0.0     0.0
                                                                1.8%                   40 B.GERAL1-1CS  1     0.0     0.4     0.4
                                                                1.8%                  189 BGERAL-TR1e2  1     0.0    -0.4     0.4
 209    1  0   1.027     0.0     0.0     0.0     0.0     0.0     0.0
ADRIAN-T-T1D  -113.3     0.0     0.0     0.0     0.0     0.0     0.0
                                                                0.0%                  133 ADRIAN-F-T1D  1     0.0     0.0     0.0 1.000F
CEPEL - CENTRO DE PESQUISAS DE ENERGIA ELETRICA - PROGRAMA DE ANALISE DE REDES - V08MAR05A                                          PAG.  42
```

```
ANUAL 06/07 * SETEMBRO 2006 PESADA S/SE 19H N/NE 19H * ANAT0 - FSE - C13
RELATORIO COMPLETO DO SISTEMA * AREA  1 * *              FURNAS              *

X----------------- D A D O S  -  B A R R A ------------------------X------------ F L U X O S  -  C I R C U I T O S ------------X
 DA BARRA      TENSAO GERACAO INJ EQV  CARGA   ELO CC  SHUNT    MOTOR
 NUM. KV TIPO   MOD/     MW/     MW/     MW/     MW/   Mvar/     MW/
     NOME       ANG     Mvar    Mvar    Mvar    Mvar   EQUIV    Mvar  PARA BARRA                    FLUXOS
                                                FLUXO % SHUNT L         NUM.     NOME     NC     MW    Mvar  MVA/V_d   TAP  DEFAS TIE
X------------X-------X-------X-------X-------X-------X-------X-------X----X------------X--X-------X-------X-------X------X-----X---X

  210    1  0   1.086     0.0     0.0     0.0     0.0     0.0     0.0
 ITUMBIAR-500   -81.1     0.0     0.0     0.0     0.0     0.0     0.0                                   -130.8 SHL
                                                56.1%                    18 ITUMBIAR-4GR  1 -1393.5   445.7  1347.6 1.050F
                                                 0.0%                    19 ITUMBIAR-000  1     0.0     0.0     0.0 1.050F
                                                20.6%                   100 MARIMBON-500  1  -382.1   -65.5   357.1
                                                42.4%                   217 ITUMBIAR-345 49   249.8   -63.6   237.4 1.050F
                                                42.4%                   217 ITUMBIAR-345 50   249.8   -63.6   237.4 1.050F
                                                42.4%                   217 ITUMBIAR-345 53   249.8   -63.6   237.4 1.050F
                                                30.8%                   233 SAMAMBAI-500  1   850.8  -172.8   799.7
                                                34.5%  -130.8           320 EMBORCAC-500  1   728.8   -30.8   671.9               02
                                                30.6%                   370 SSIMAO---500  1  -553.3    14.1   509.8               02
  211    1  0   1.019     0.0     0.0     0.0     0.0     0.0     0.0
 CAMPOS--FIC2  -125.9     0.0     0.0     0.0     0.0     0.0     0.0
                                                55.6%                   147 CAMPOS---345  2  -127.0   -11.1   125.1
                                                58.5%                   175 CAMPOS---138  2   127.0    43.2   131.6
                                                42.0%                   212 CM-TER2-3C10  2     0.0   -32.1    31.5
  212    1  0   1.050     0.0     0.0     0.0     0.0    33.1     0.0
 CM-TER2-3C10  -125.9     0.0     0.0     0.0     0.0     0.0     0.0
                                                42.0%                   211 CAMPOS--FIC2  2     0.0    33.1    31.5 1.000F
                                                 0.0%                   215 CM-TER2-2R25  1     0.0     0.0     0.0
  213  345  0   1.030     0.0     0.0     0.0     0.0     0.0     0.0
 MARIMBON-345   -79.0     0.0     0.0     0.0     0.0     0.0     0.0
                                                52.2%                   214 MARIMBON-FIC  1  -276.7   119.4   292.5 0.980F
                                                40.8%                   216 PCOLOMBI-345  1   276.7  -119.4   292.5
  214    1  0   1.058     0.0     0.0     0.0     0.0     0.0     0.0
 MARIMBON-FIC   -79.9     0.0     0.0     0.0     0.0     0.0     0.0
                                                51.2%                   100 MARIMBON-500  1  -276.7   124.5   286.7
                                                51.2%                   213 MARIMBON-345  1   276.7  -124.5   286.7
                                                 0.0%                   246 MARIMBON13.8  1     0.0     0.0     0.0
  215    1  0   1.050     0.0     0.0     0.0     0.0     0.0     0.0
 CM-TER2-2R25  -125.9     0.0     0.0     0.0     0.0     0.0     0.0
                                                 0.0%                   212 CM-TER2-3C10  1     0.0     0.0     0.0
  216    1  0   1.049     0.0     0.0     0.0     0.0     0.0     0.0
 PCOLOMBI-345   -82.7     0.0     0.0     0.0     0.0     0.0     0.0
                                                38.7%                   213 MARIMBON-345  1  -274.9    95.0   277.2
                                                 7.8%                   217 ITUMBIAR-345  1    23.3   -54.1    56.2
                                                34.7%                   396 VGRANDE--345  1   251.6   -40.9   242.9               02
CEPEL - CENTRO DE PESQUISAS DE ENERGIA ELETRICA - PROGRAMA DE ANALISE DE REDES - V08MAR05A                                PAG.  43

ANUAL 06/07 * SETEMBRO 2006 PESADA S/SE 19H N/NE 19H * ANAT0 - FSE - C13
RELATORIO COMPLETO DO SISTEMA * AREA  1 * *              FURNAS              *

X----------------- D A D O S  -  B A R R A ------------------------X------------ F L U X O S  -  C I R C U I T O S ------------X
 DA BARRA      TENSAO GERACAO INJ EQV  CARGA   ELO CC  SHUNT    MOTOR
 NUM. KV TIPO   MOD/     MW/     MW/     MW/     MW/   Mvar/     MW/
     NOME       ANG     Mvar    Mvar    Mvar    Mvar   EQUIV    Mvar  PARA BARRA                    FLUXOS
                                                FLUXO % SHUNT L         NUM.     NOME     NC     MW    Mvar  MVA/V_d   TAP  DEFAS TIE
X------------X-------X-------X-------X-------X-------X-------X-------X----X------------X--X-------X-------X-------X------X-----X---X

  217    1  0   1.045     0.0     0.0     0.0     0.0     0.0     0.0
```

```
 ITUMBIAR-345   -83.4     0.0     0.0     0.0     0.0     0.0     0.0
                                                44.5%                 210 ITUMBIAR-500 49  -249.8    74.3   249.3
                                                44.5%                 210 ITUMBIAR-500 50  -249.8    74.3   249.3
                                                44.5%                 210 ITUMBIAR-500 53  -249.8    74.3   249.3
                                                 8.9%                 216 PCOLOMBI-345  1   -23.3   -62.6    63.9
                                                49.3%                 218 BANDEIRA-345  1   394.5    -9.6   377.5
                                                49.3%                 218 BANDEIRA-345  2   394.5    -9.6   377.5
                                                 8.0%                 220 CORUMBA--345  1    59.2   -24.9    61.4
                                                19.6%                 225 ITUMBIAR-230  1   -25.2   -38.7    44.2
                                                19.6%                 225 ITUMBIAR-230  2   -25.2   -38.7    44.2
                                                19.6%                 225 ITUMBIAR-230  3   -25.2   -38.7    44.2
  218  345  0   1.025     0.0     0.0     0.0     0.0    96.1     0.0
 BANDEIRA-345   -95.2     0.0     0.0     0.0     0.0     0.0     0.0
                                                25.2%                  42 BAND10.5-CE1  1     0.0    25.8    25.2 1.000F
                                                25.2%                  43 BAND10.5-CE2  1     0.0    25.8    25.2 1.000F
                                                65.4%                 118 BANDE-FIC-T4  1   137.4    62.4   147.2 1.000F
                                                44.2%                 168 BANDEI-2-230  3   103.8    69.8   122.0
                                                49.3%                 217 ITUMBIAR-345  1  -387.2   -12.0   378.0
                                                49.3%                 217 ITUMBIAR-345  2  -387.2   -12.0   378.0
                                                67.6%                 223 BANDE-FIC-T1  1   142.0    64.5   152.2 1.000F
                                                65.9%                 224 BANDE-FIC-T2  1   138.4    62.9   148.3 1.000F
                                                24.2%                 234 SAMAMBAI-345  1   126.4   -95.5   154.5
                                                24.2%                 234 SAMAMBAI-345  2   126.4   -95.5   154.5
  219  345  0   1.040     0.0     0.0     0.0     0.0     0.0     0.0
 B.SUL----345   -99.0     0.0     0.0     0.0     0.0     0.0     0.0                                -65.0 SHL
                                                 0.0%                 111 BSUL---CI71%  1     0.0     0.0     0.0 1.000F
                                                45.3%   -65.0         220 CORUMBA--345  1  -355.2    65.6   347.2
                                                53.1%                 222 BSUL-FIC-230  1   124.0     7.7   119.4 1.000F
                                                53.9%                 228 B.SUL----230  1   126.1    -0.2   121.2
                                                36.7%                 234 SAMAMBAI-345  1  -212.9  -119.3   234.5
                                                36.7%                 234 SAMAMBAI-345  2  -212.9  -119.3   234.5
                                                65.9%                 236 B.SUL----138  1    98.4    30.3    98.9
                                                52.5%                 236 B.SUL----138  2    78.3    24.1    78.8
                                                51.7%                 236 B.SUL----138  4    77.1    23.8    77.5
                                                56.1%                 236 B.SUL----138  8    83.7    25.8    84.2
                                                71.9%                 236 B.SUL----138 82   107.2    33.0   107.8
                                                58.1%                 244 BSUL-FIC--T7  7    86.1    28.3    87.2 1.000F
  220  345  0   1.044     0.0     0.0     0.0     0.0     0.0     0.0
 CORUMBA--345   -84.2     0.0     0.0     0.0     0.0     0.0     0.0
                                                72.3%                  35 CORUMBA--3GR  1  -305.0    78.3   301.5 1.025F
                                                 7.9%                 217 ITUMBIAR-345  1   -59.1   -21.5    60.2
                                                46.1%                 219 B.SUL----345  1   364.1   -56.8   352.8
                                                 0.0%                3970 CORUMBA--138  1     0.0     0.0     0.0
```



```
X----------------- D A D O S  -  B A R R A -------------------------X------------ F L U X O S  -  C I R C U I T O S ------------X
 DA BARRA      TENSAO GERACAO INJ EQV  CARGA   ELO CC  SHUNT    MOTOR
 NUM. KV TIPO   MOD/     MW/     MW/     MW/     MW/   Mvar/     MW/
     NOME       ANG     Mvar    Mvar    Mvar    Mvar   EQUIV    Mvar  PARA BARRA                    FLUXOS
                                                FLUXO % SHUNT L         NUM.     NOME     NC     MW    Mvar  MVA/V_d   TAP  DEFAS TIE
X------------X-------X-------X-------X-------X-------X-------X-------X----X------------X--X-------X-------X-------X------X-----X---X

  221   35  0   0.986     0.0     0.0     0.0     0.0     0.0     0.0
 B.GERAL-34.5  -106.8     0.0     0.0     0.0     0.0     0.0     0.0
                                                91.6%                 188 BGERAL-TR2e2  1   -27.0    -1.8    27.5 0.957F
                                                91.0%                 189 BGERAL-TR1e2  1   -26.9    -1.8    27.3 0.957F
                                                94.0%                 227 B.GERAL--230  3   -27.7    -2.1    28.2
```

```
                                                   94.0%                 227 B.GERAL--230  4   -27.7    -2.1    28.2
                                                   50.7%                 227 B.GERAL--230  5   -29.9    -2.3    30.4
                                                   73.1%                2541 SE 01   34.5  1    17.3     0.0    17.5                13
                                                   73.1%                2541 SE 01   34.5  2    17.3     0.0    17.5                13
                                                   73.1%                2541 SE 01   34.5  3    17.3     0.0    17.5                13
                                                   52.4%                2542 SE 02   34.5  1    12.2    -2.0    12.6                13
                                                   52.4%                2542 SE 02   34.5  2    12.2    -2.0    12.6                13
                                                   52.4%                2542 SE 02   34.5  3    12.2    -2.0    12.6                13
                                                    0.0%                2544 E_GR01  34.5  1     0.0     0.0     0.0                13
                                                   59.4%                2545 E_GR02  34.5  1    17.0     7.9    19.0                13
                                                   45.0%                2563 SE-0802-34.5  1    10.6     0.6    10.8                13
                                          SUP     102.8%                2580 SE 08   34.5  1    23.1     7.7    24.7                13
  222    1  0   1.039     0.0     0.0     0.0     0.0     0.0     0.0
 BSUL-FIC-230  -102.0     0.0     0.0     0.0     0.0     0.0     0.0
                                                   53.1%                 219 B.SUL----345  1  -124.0    -1.3   119.4
                                                   55.2%                 228 B.SUL----230  1   124.0    35.2   124.1
                                                   43.4%                 232 B.SUL---13.8  1     0.0   -33.8    32.6
  223    1  0   1.000     0.0     0.0     0.0     0.0     0.0     0.0
 BANDE-FIC-T1   -98.5     0.0     0.0     0.0     0.0     0.0     0.0
                                                   67.6%                 218 BANDEIRA-345  1  -142.0   -54.8   152.2
                                                   67.6%                 226 BANDEIRA-230  1   142.0    54.8   152.2
                                                    0.0%                 242 BAND-TER-T1   1     0.0     0.0     0.0
  224    1  0   1.000     0.0     0.0     0.0     0.0     0.0     0.0
 BANDE-FIC-T2   -98.6     0.0     0.0     0.0     0.0     0.0     0.0
                                                   65.9%                 218 BANDEIRA-345  1  -138.4   -53.2   148.3
                                                   65.9%                 226 BANDEIRA-230  1   138.4    53.2   148.3
                                                    0.0%                 243 BAND-TER-T2A  1     0.0     0.0     0.0
  225  230  0   1.020     0.0     0.0     0.0     0.0     0.0     0.0
 ITUMBIAR-230   -83.1     0.0     0.0     0.0     0.0     0.0     0.0
                                                   20.3%                 217 ITUMBIAR-345  1    25.2    39.2    45.7 0.966*
                                                   20.3%                 217 ITUMBIAR-345  2    25.2    39.2    45.7 0.966*
                                                   20.3%                 217 ITUMBIAR-345  3    25.2    39.2    45.7 0.966*
                                                   11.8%                 231 R.VERDE--230  1    -8.9   -22.0    23.3
                                                   24.5%                 749 C.DOUR-1-230  1   -57.7   -18.9    59.5                12
                                                   20.2%                2978 PARANAIB-230  1    45.8     9.2    45.8                12
                                                   31.3%                4505 ITU-RV-2-230  2   -54.9   -86.0   100.0
CEPEL - CENTRO DE PESQUISAS DE ENERGIA ELETRICA - PROGRAMA DE ANALISE DE REDES - V08MAR05A                                  PAG.  45

ANUAL 06/07 * SETEMBRO 2006 PESADA S/SE 19H N/NE 19H * ANAT0 - FSE - C13
RELATORIO COMPLETO DO SISTEMA * AREA  1 * *              FURNAS              *

X------------------ D A D O S  -  B A R R A -------------------------X------------- F L U X O S  -  C I R C U I T O S -------------X
 DA BARRA      TENSAO GERACAO INJ EQV  CARGA   ELO CC  SHUNT    MOTOR
 NUM. KV TIPO   MOD/     MW/     MW/     MW/     MW/   Mvar/     MW/
     NOME       ANG     Mvar    Mvar    Mvar    Mvar   EQUIV    Mvar  PARA BARRA                    FLUXOS
                                                FLUXO % SHUNT L         NUM.     NOME     NC     MW    Mvar  MVA/V_d   TAP  DEFAS TIE
X------------X-------X-------X-------X-------X-------X-------X-------X----X------------X--X-------X-------X-------X------X-----X---X

  226  230  0   1.030     0.0     0.0     0.3     0.0     0.0     0.0
 BANDEIRA-230   -97.8     0.0     0.0     0.0     0.0     0.0     0.0
                                                   63.8%                 118 BANDE-FIC-T4  1  -137.4   -54.9   143.6 1.025F
                                                    1.4%                 168 BANDEI-2-230  1    98.4   106.6   140.8
                                                   66.0%                 223 BANDE-FIC-T1  1  -142.0   -56.8   148.5 1.025F
                                                   64.3%                 224 BANDE-FIC-T2  1  -138.4   -55.3   144.7 1.025F
                                                   53.2%                 766 XAVANTES-230  1   161.0    30.3   159.0                12
                                                   76.6%                 766 XAVANTES-230  2   158.2    30.2   156.3                12
  227  230  0   1.034     0.0     0.0     0.0     0.0     0.0     0.0
 B.GERAL--230  -102.5     0.0     0.0     0.0     0.0     0.0     0.0
                                                   88.2%                 188 BGERAL-TR2e2  1    27.0     4.3    26.5 0.995F
                                                   87.6%                 189 BGERAL-TR1e2  1    26.9     4.2    26.3 0.995F
```

```
                                                 90.4%                 221 B.GERAL-34.5  3    27.7     4.3    27.1 1.040F
                                                 90.4%                 221 B.GERAL-34.5  4    27.7     4.3    27.1 1.040F
                                                 48.8%                 221 B.GERAL-34.5  5    29.9     4.6    29.3 1.040F
                                                 64.1%                 228 B.SUL----230  1  -157.3   -34.7   155.8
                                                  8.5%                3723 PIRINEUS-230  1    18.0    13.1    21.6                12
  228  230  0   1.041     0.0     0.0     0.0     0.0     0.0     0.0
 B.SUL----230  -101.4     0.0     0.0     0.0     0.0     0.0     0.0
                                                 53.9%                 219 B.SUL----345  1  -126.1     5.5   121.2 1.000F
                                                 55.2%                 222 BSUL-FIC-230  1  -124.0   -36.5   124.1 1.000F
                                                 63.9%                 227 B.GERAL--230  1   157.8    35.4   155.3
                                                 37.2%                2987 AG.LINDA-230  1    92.4    -4.4    88.8                12
  229  230  0   1.035     0.0     0.0     0.5     0.0    29.7     0.0
 B.ALTO---230  -106.4     0.0     0.0     0.0     0.0     0.0     0.0
                                                 52.5%                  55 BALTO13.8-CE  1     0.0    17.9    17.3 1.000F
                                                  7.2%                 787 NIQUEL---230  1   -18.9     0.3    18.3
                                                 60.5%                2980 BARROALTO69   1    30.6     6.5    30.2 0.982*         12
                                                 26.2%                2987 AG.LINDA-230  1   -64.8    -1.9    62.6                12
                                                 22.6%                2988 ITAPACI--230  1    52.6     6.7    51.2                12
  230  230  0   1.050     0.0     0.0     0.0     0.0     0.0     0.0
 S.MESA---230   -99.2     0.0     0.0     0.0     0.0     0.0     0.0
                                                 14.5%                 235 S.MESA---500  1    55.8   -24.1    57.9 0.980F
                                                 14.5%                 235 S.MESA---500  2    55.8   -24.1    57.9 0.980F
                                                 29.7%                 239 S.MESA---138  4    15.1    -3.6    14.8
                                                 29.7%                 239 S.MESA---138  5    15.1    -3.6    14.8
                                                 29.7%                 239 S.MESA---138  6    15.1    -3.6    14.8
                                                 33.8%                 787 NIQUEL---230  1   169.7     8.4   161.7
                                                 50.8%                3965 C.BRAVA--230  1  -163.4    25.3   157.4
                                                 50.8%                3965 C.BRAVA--230  2  -163.4    25.3   157.4
CEPEL - CENTRO DE PESQUISAS DE ENERGIA ELETRICA - PROGRAMA DE ANALISE DE REDES - V08MAR05A                                PAG.  46

ANUAL 06/07 * SETEMBRO 2006 PESADA S/SE 19H N/NE 19H * ANAT0 - FSE - C13
RELATORIO COMPLETO DO SISTEMA * AREA  1 * *              FURNAS              *

X----------------- D A D O S  -  B A R R A -------------------------X------------- F L U X O S  -  C I R C U I T O S -------------X
 DA BARRA      TENSAO GERACAO INJ EQV  CARGA   ELO CC  SHUNT    MOTOR
 NUM. KV TIPO   MOD/     MW/     MW/     MW/     MW/   Mvar/     MW/
     NOME       ANG     Mvar    Mvar    Mvar    Mvar   EQUIV    Mvar  PARA BARRA                    FLUXOS
                                                FLUXO % SHUNT L         NUM.     NOME     NC     MW    Mvar  MVA/V_d   TAP  DEFAS TIE
X------------X-------X-------X-------X-------X-------X-------X-------X----X------------X--X-------X-------X-------X------X-----X---X

  231  230  0   1.030     0.0     0.0     0.0     0.0     0.0     0.0
 R.VERDE--230   -82.2     0.0     0.0     0.0     0.0     0.0     0.0
                                                  8.9%                 225 ITUMBIAR-230  1     8.9   -15.8    17.6
                                                 62.1%                 240 R.VERDE--FIC  1    62.7    12.5    62.1 1.025F
                                                  7.8%                 749 C.DOUR-1-230  1    -4.3   -15.3    15.5                12
                                                 65.5%                3960 R.VERDE-FIC2  2    66.1    13.2    65.5 1.025F
                                                 34.9%                4502 B.PEIXE--230  1   -85.5    -8.9    83.5                45
                                                 29.7%                4502 B.PEIXE--230  2   -60.2     3.1    58.6                45
                                                 20.4%                4505 ITU-RV-2-230  2    55.7    37.5    65.2
                                                 25.1%                4512 C.MAGAL. 230  1   -43.5   -26.4    49.4                45
  232    1  0   1.086     0.0     0.0     0.0     0.0    35.4     0.0
 B.SUL---13.8  -102.0     0.0     0.0     0.0     0.0     0.0     0.0
                                                 43.4%                 222 BSUL-FIC-230  1     0.0    35.4    32.6 1.000F
  233  500  0   1.095     0.0     0.0     0.0     0.0     0.0     0.0
 SAMAMBAI-500   -97.7     0.0     0.0     0.0     0.0     0.0     0.0                                  -176.4 SHL
                                                 24.8%                  92 SAMAMB--CAP1  1   305.8  -116.9   298.9
                                                 23.8%                  93 SAMAMB--CAP2  1   366.4   -34.3   336.0
                                                 25.9%                  94 SAMAMB--CAP3  1   366.4   -34.3   336.0
                                                 29.4%   -88.2         210 ITUMBIAR-500  1  -833.5    83.7   764.7
                                                 14.7%                 234 SAMAMBAI-345  1   152.6    71.7   153.9
```

```
                                                                 15.4%                  234 SAMAMBAI-345  2   160.0    75.2   161.4
                                                                 18.3%   -88.2          320 EMBORCAC-500  1  -517.8   -45.2   474.5                02
  234  345  0   1.046     0.0     0.0     0.0     0.0   164.1     0.0
 SAMAMBAI-345   -98.6     0.0     0.0     0.0     0.0     0.0     0.0
                                                                 18.9%                  218 BANDEIRA-345  1  -125.6    15.9   121.0
                                                                 18.9%                  218 BANDEIRA-345  2  -125.6    15.9   121.0
                                                                 36.1%                  219 B.SUL----345  1   213.1   113.6   230.8
                                                                 36.1%                  219 B.SUL----345  2   213.1   113.6   230.8
                                                                 15.2%                  233 SAMAMBAI-500  1  -152.6   -68.7   160.0 0.962F
                                                                 16.0%                  233 SAMAMBAI-500  2  -160.0   -72.1   167.8 0.962F
                                                                 30.9%                  237 SAMAMBAI-138  4    68.9    23.0    69.5
                                                                 30.8%                  237 SAMAMBAI-138  5    68.7    23.0    69.3
  235  500  0   1.079     0.0     0.0     0.0     0.0     0.0     0.0
 S.MESA---500  -100.0     0.0     0.0     0.0     0.0     0.0     0.0                                   -474.9 SHL
                                                                 67.2%                   36 S.MESA---3GR  1  -900.0   494.6   951.9 1.050F
                                                                 25.6%                   92 SAMAMB--CAP1  1  -304.0  -133.4   307.7
                                                                 24.6%  -158.3           93 SAMAMB--CAP2  1  -364.5   -82.2   346.3
                                                                 26.7%  -158.3           94 SAMAMB--CAP3  1  -364.5   -82.2   346.3
                                                                 14.2%                  230 S.MESA---230  1   -55.8    25.1    56.7
                                                                 14.2%                  230 S.MESA---230  2   -55.8    25.1    56.7
                                                                 38.5%  -158.3         6444 R.EGUAS--500  1   809.5   174.1   767.5                53
                                                                                   CSC 7236 SMA-GUR--500  1   634.7  -210.4   619.7                63
                                                                                   CSC 7237 SMA-GUR2-500  1   600.5  -210.7   589.9                63
CEPEL - CENTRO DE PESQUISAS DE ENERGIA ELETRICA - PROGRAMA DE ANALISE DE REDES - V08MAR05A                                          PAG.  47

ANUAL 06/07 * SETEMBRO 2006 PESADA S/SE 19H N/NE 19H * ANAT0 - FSE - C13
RELATORIO COMPLETO DO SISTEMA * AREA  1 * *              FURNAS              *

X----------------- D A D O S  -  B A R R A ------------------------X------------ F L U X O S  -  C I R C U I T O S ------------X
 DA BARRA      TENSAO GERACAO INJ EQV  CARGA   ELO CC  SHUNT    MOTOR
 NUM. KV TIPO   MOD/     MW/     MW/     MW/     MW/   Mvar/     MW/
     NOME       ANG     Mvar    Mvar    Mvar    Mvar   EQUIV    Mvar  PARA BARRA                    FLUXOS
                                                FLUXO % SHUNT L         NUM.     NOME     NC     MW    Mvar  MVA/V_d   TAP  DEFAS TIE
X------------X-------X-------X-------X-------X-------X-------X-------X----X------------X--X-------X-------X-------X------X-----X---X

  236    1  0   1.022     0.0     0.0     0.8     0.0     0.0     0.0
 B.SUL----138  -102.7     0.0     0.0     0.0     0.0     0.0     0.0
                                                                 66.0%                  219 B.SUL----345  1   -98.4   -23.6    99.0 0.999*
                                                                 52.6%                  219 B.SUL----345  2   -78.3   -18.8    78.8 0.999*
                                                                 51.7%                  219 B.SUL----345  4   -77.1   -18.5    77.6 0.999*
                                                                 56.2%                  219 B.SUL----345  8   -83.7   -20.1    84.2 0.999*
                                                                 71.9%                  219 B.SUL----345 82  -107.2   -25.7   107.9 0.999*
                                                                 66.7%                  244 BSUL-FIC--T7  7   -86.1   -55.0   100.0 0.999*
                                                                 69.4%                 2501 SE AC    138  1   109.0    31.8   111.1                13
                                                                 55.5%                 2502 SE TG    138  1    85.5    30.4    88.8                13
                                                                 55.5%                 2502 SE TG    138  2    85.5    30.4    88.8                13
                                                                 23.7%                 2508 SE CS    138  1    37.6     9.1    37.9                13
                                                                 23.7%                 2508 SE CS    138  2    37.6     9.1    37.9                13
                                                                 55.7%                 2513 SE BN    138  1    87.4    25.4    89.1                13
                                                                 55.7%                 2513 SE BN    138  2    87.4    25.4    89.1                13
  237    1  0   1.030     0.0     0.0     0.0     0.0     0.0     0.0
 SAMAMBAI-138  -100.3     0.0     0.0     0.0     0.0     0.0     0.0
                                                                 31.1%                  234 SAMAMBAI-345  4   -68.9   -20.7    69.9 0.994*
                                                                 31.0%                  234 SAMAMBAI-345  5   -68.7   -20.7    69.7 0.994*
                                                                 53.3%                 2513 SE BN    138  1    87.1    11.7    85.3                13
                                                                 11.9%                 2523 SE MJ    138  1     2.5    19.4    19.0                13
                                                                  0.5%                 3727 RIOVERME.138  1    48.1    10.4    47.8                12
  238    1  0   1.029     0.0     0.0     0.1     0.0     0.0     0.0
 R.VERDE--138   -85.0     0.0     0.0     0.0     0.0     0.0     0.0
                                                                 61.6%                  240 R.VERDE--FIC  1   -62.7    -9.4    61.6 1.033F
```

```
                                                  4.8%                 248 TAP-RIOBOIS   1    -3.4    -2.7     4.2
                                                 31.7%                 249 TAP-RIOCLARO  1    28.0     4.9    27.6
                                                 80.8%                 783 RIO VERDE138  1    70.2    17.2    70.3                12
                                                 10.6%                3703 TAPPERDIG138  1    10.9     2.8    11.0                12
                                                 21.9%                3706 ACREUNA--138  1    23.0    -3.1    22.5                12
                                                 65.0%                3960 R.VERDE-FIC2  2   -66.1    -9.9    65.0 1.033F
 239  138  0   1.031     0.0     0.0     0.0     0.0     0.0     0.0
S.MESA---138  -100.4     0.0     0.0     0.0     0.0     0.0     0.0
                                                 30.4%                 230 S.MESA---230  4   -15.1     4.0    15.2 0.976*
                                                 30.4%                 230 S.MESA---230  5   -15.1     4.0    15.2 0.976*
                                                 30.4%                 230 S.MESA---230  6   -15.1     4.0    15.2 0.976*
                                                 35.4%                 793 PORANGATU138  1    30.0    -9.2    30.4                12
                                                 17.7%                2998 MINACU---138  1    15.5    -2.7    15.3                12
 240    1  0   0.996     0.0     0.0     0.0     0.0     0.0     0.0
R.VERDE--FIC   -85.2     0.0     0.0     0.0     0.0     0.0     0.0
                                                 63.7%                 231 R.VERDE--230  1   -62.7    -9.2    63.7
                                                 63.7%                 238 R.VERDE--138  1    62.7     9.2    63.7
                                                  0.0%                 241 R.VERDE-13.8  1     0.0     0.0     0.0
CEPEL - CENTRO DE PESQUISAS DE ENERGIA ELETRICA - PROGRAMA DE ANALISE DE REDES - V08MAR05A                              PAG.  48

ANUAL 06/07 * SETEMBRO 2006 PESADA S/SE 19H N/NE 19H * ANAT0 - FSE - C13
RELATORIO COMPLETO DO SISTEMA * AREA  1 * *              FURNAS             *

X----------------- D A D O S  -  B A R R A -------------------------X------------ F L U X O S  -  C I R C U I T O S ------------X
 DA BARRA      TENSAO GERACAO INJ EQV  CARGA   ELO CC  SHUNT    MOTOR
 NUM. KV TIPO   MOD/     MW/     MW/    MW/     MW/   Mvar/     MW/
     NOME       ANG     Mvar    Mvar    Mvar    Mvar   EQUIV    Mvar  PARA BARRA                    FLUXOS
                                                FLUXO % SHUNT L         NUM.     NOME     NC     MW    Mvar  MVA/V_d   TAP  DEFAS TIE
X------------X-------X-------X-------X-------X-------X-------X-------X----X------------X--X-------X-------X-------X------X-----X---X

 241    1  0   0.996     0.0     0.0     0.0     0.0     0.0     0.0
R.VERDE-13.8   -85.2     0.0     0.0     0.0     0.0     0.0     0.0
                                                  0.0%                 240 R.VERDE--FIC  1     0.0     0.0     0.0 1.000F
 242    1  0   1.000     0.0     0.0     0.0     0.0     0.0     0.0
BAND-TER-T1    -98.5     0.0     0.0     0.0     0.0     0.0     0.0
                                                  0.0%                 223 BANDE-FIC-T1  1     0.0     0.0     0.0 1.000F
 243    1  0   1.000     0.0     0.0     0.0     0.0     0.0     0.0
BAND-TER-T2A   -98.6     0.0     0.0     0.0     0.0     0.0     0.0
                                                  0.0%                 224 BANDE-FIC-T2  1     0.0     0.0     0.0 1.000F
 244    1  0   1.020     0.0     0.0     0.0     0.0     0.0     0.0
BSUL-FIC--T7  -102.9     0.0     0.0     0.0     0.0     0.0     0.0
                                                 58.1%                 219 B.SUL----345  7   -86.1   -22.1    87.2
                                                 66.6%                 236 B.SUL----138  7    86.1    54.6   100.0
                                                 63.8%                 245 BSUL13.8-C30  7     0.0   -32.5    31.9
 245    1  0   1.063     0.0     0.0     0.0     0.0    33.9     0.0
BSUL13.8-C30  -102.9     0.0     0.0     0.0     0.0     0.0     0.0
                                                 63.8%                 244 BSUL-FIC--T7  7     0.0    33.9    31.9 1.000F
 246    1  0   1.058     0.0     0.0     0.0     0.0     0.0     0.0
MARIMBON13.8   -79.9     0.0     0.0     0.0     0.0     0.0     0.0
                                                  0.0%                 214 MARIMBON-FIC  1     0.0     0.0     0.0 1.000F
 247    1  0   1.027     0.0     0.0     0.0     0.0     0.0     0.0
C.BRAVA--138  -101.3     0.0     0.0     0.0     0.0     0.0     0.0
                                                  0.0%                 792 SAMA----138   1     0.0     0.0     0.0                12
 248    1  0   1.031     0.0     0.0     0.0     0.0     0.0     0.0
TAP-RIOBOIS    -84.6     0.0     0.0     0.0     0.0     0.0     0.0
                                                  5.0%                 238 R.VERDE--138  1     3.4    -3.0     4.4
                                                 11.1%                 755 C.DOURADA138  1    -9.9     1.0     9.7                12
                                                  0.1%                3700 RIOBOIS--138  1     6.5     2.0     6.6                12
 249    1  0   0.991     0.0     0.0     0.0     0.0     0.0     0.0
TAP-RIOCLARO   -88.0     0.0     0.0     0.0     0.0     0.0     0.0
```

```
                                                 33.3%                 238 R.VERDE--138  1   -27.3    -8.7    28.9
                                                  9.5%                 791 P. DAS EMAS   1    -6.1     5.5     8.3                12
                                                 38.9%                3701 RIOCLARO-138  1    33.4     3.2    33.9                12
  787  230  0   1.031     0.0     0.0     0.0     0.0     0.0     0.0
 NIQUEL---230  -105.5     0.0     0.0     0.0     0.0     0.0     0.0
                                                  9.4%                 229 B.ALTO---230  1    19.0   -16.0    24.1
                                                 34.3%                 230 S.MESA---230  1  -167.9   -17.2   163.8
                                                 83.2%                 788 N.TOCANT-230  1   100.3    22.7    99.8
                                                 18.9%                 789 CODEMIN--230  1    48.6    10.5    48.2                12
CEPEL - CENTRO DE PESQUISAS DE ENERGIA ELETRICA - PROGRAMA DE ANALISE DE REDES - V08MAR05A                                PAG.  49

ANUAL 06/07 * SETEMBRO 2006 PESADA S/SE 19H N/NE 19H * ANAT0 - FSE - C13
RELATORIO COMPLETO DO SISTEMA * AREA  1 * *              FURNAS              *

X----------------- D A D O S  -  B A R R A -------------------------X------------ F L U X O S  -  C I R C U I T O S ------------X
 DA BARRA      TENSAO GERACAO INJ EQV  CARGA   ELO CC  SHUNT    MOTOR
 NUM. KV TIPO   MOD/     MW/     MW/     MW/     MW/   Mvar/     MW/
     NOME       ANG     Mvar    Mvar    Mvar    Mvar   EQUIV    Mvar  PARA BARRA                    FLUXOS
                                                FLUXO % SHUNT L         NUM.     NOME     NC     MW    Mvar  MVA/V_d   TAP  DEFAS TIE
X------------X-------X-------X-------X-------X-------X-------X-------X----X------------X--X-------X-------X-------X------X-----X---X

  788  230  0   1.024     0.0     0.0     0.0     0.0     0.0     0.0
 N.TOCANT-230  -106.3     0.0     0.0     0.0     0.0     0.0     0.0
                                                 83.7%                 787 NIQUEL---230  1  -100.0   -24.1   100.4
                                                  1.0%                2981 N.TOCANT-13   1   100.0    24.1   100.4 1.025F        41
 3960    1  0   0.996     0.0     0.0     0.0     0.0     0.0     0.0
 R.VERDE-FIC2   -85.1     0.0     0.0     0.0     0.0     0.0     0.0
                                                 67.1%                 231 R.VERDE--230  2   -66.1    -9.7    67.1
                                                 67.1%                 238 R.VERDE--138  2    66.1     9.7    67.1
                                                  0.0%                3961 R.VERDE2--13  2     0.0     0.0     0.0
 3961    1  0   0.996     0.0     0.0     0.0     0.0     0.0     0.0
 R.VERDE2--13   -85.1     0.0     0.0     0.0     0.0     0.0     0.0
                                                  0.0%                3960 R.VERDE-FIC2  2     0.0     0.0     0.0 1.000F
 3963    1  1   1.000   170.0     0.0     0.0     0.0     0.0     0.0
 N.FLU-V1-1GR  -114.3   -80.9     0.0     0.0     0.0     0.0     0.0
                                                  1.9%                3966 MACAE----345  1   170.0   -80.9   188.3                41
 3964    1  1   1.040   330.0     0.0     0.0     0.0     0.0     0.0
 CBRAVA---3GR   -90.4   -23.6     0.0     0.0     0.0     0.0     0.0
                                                  3.2%                3965 C.BRAVA--230  1   330.0   -23.6   318.1
 3965  230  0   1.048     0.0     0.0     0.0     0.0     0.0     0.0
 C.BRAVA--230   -94.6     0.0     0.0     0.0     0.0     0.0     0.0
                                                 51.3%                 230 S.MESA---230  1   165.0   -23.9   159.1
                                                 51.3%                 230 S.MESA---230  2   165.0   -23.9   159.1
                                                  3.2%                3964 CBRAVA---3GR  1  -330.0    47.8   318.1 1.000F
 3970    1  0   1.015     0.0     0.0     0.0     0.0     0.0     0.0
 CORUMBA--138   -84.2     0.0     0.0     0.0     0.0     0.0     0.0
                                                  0.0%                 220 CORUMBA--345  1     0.0     0.0     0.0 0.972*
 4200    1  0   1.030     0.0     0.0     0.0     0.0     0.0     0.0
 S.JOSE2--138  -111.0     0.0     0.0     0.0     0.0     0.0     0.0
                                                 59.5%                 108 S.JOSE---500 11  -359.1   -79.1   357.0 0.985*
                                                 59.5%                 108 S.JOSE---500 12  -359.1   -79.1   357.0 0.985*
                                                  3.4%                 169 S.JOSE---138  1   353.6     0.2   343.3
                                                 43.1%                 270 CORDOVIL-138  1   238.8    -0.5   231.9                09
                                                 55.0%                 275 CASCADURA--2  1   122.2    18.5   120.0                09
                                                 46.7%                1600 W.LUIS---138  1   258.9     5.2   251.4                09
                                                 56.3%                1615 FICAP----138  1   124.9    19.1   122.7                09
                                                  3.9%                4201 TERMR2-1-138  1  -380.2   115.7   385.9                41
 4505    1  0   0.941     0.0     0.0     0.0     0.0     0.0     0.0
 ITU-RV-2-230   -86.2     0.0     0.0     0.0     0.0     0.0     0.0
                                                 31.3%                 225 ITUMBIAR-230  2    54.9    76.4   100.0
```

```
                                                 31.3%                 231 R.VERDE--230  2   -54.9   -76.4   100.0
CEPEL - CENTRO DE PESQUISAS DE ENERGIA ELETRICA - PROGRAMA DE ANALISE DE REDES - V08MAR05A                                PAG.  50

ANUAL 06/07 * SETEMBRO 2006 PESADA S/SE 19H N/NE 19H * ANAT0 - FSE - C13
RELATORIO COMPLETO DO SISTEMA * AREA  1 * *              FURNAS              *

X----------------- D A D O S  -  B A R R A -------------------------X------------ F L U X O S  -  C I R C U I T O S ------------X
 DA BARRA      TENSAO GERACAO INJ EQV  CARGA   ELO CC  SHUNT    MOTOR
 NUM. KV TIPO   MOD/     MW/     MW/     MW/     MW/   Mvar/     MW/
     NOME       ANG     Mvar    Mvar    Mvar    Mvar   EQUIV    Mvar  PARA BARRA                    FLUXOS
                                                FLUXO % SHUNT L         NUM.     NOME     NC     MW    Mvar  MVA/V_d   TAP  DEFAS TIE
X------------X-------X-------X-------X-------X-------X-------X-------X----X------------X--X-------X-------X-------X------X-----X---X

 9008    1  0   1.067     0.0     0.0     0.0     0.0     0.0     0.0
 CPENA----FIC  -117.1     0.0     0.0     0.0     0.0     0.0     0.0
                                                 60.8%                 319 CPENA----230  1   -20.8    -5.0    20.1              02
                                                 60.8%                9009 CPENA-----13  1    20.8     5.0    20.1              02


TOTAIS DA AREA  1


X--------X--------X--------X--------X--------X--------X--------X--------X
  GERACAO  INJ EQV   CARGA   ELO CC    SHUNT   EXPORT   IMPORT   PERDAS
    MW/      MW/      MW/      MW/     Mvar/     MW/      MW/      MW/
   Mvar     Mvar     Mvar     Mvar     EQUIV    Mvar     Mvar     Mvar
X--------X--------X--------X--------X--------X--------X--------X--------X

   6744.0      0.0    171.8    204.2   7407.1  26499.0  20821.5    690.5
  -1533.1      0.0      1.4   5313.7      0.0   4518.3   3015.8   -943.5
CEPEL - CENTRO DE PESQUISAS DE ENERGIA ELETRICA - PROGRAMA DE ANALISE DE REDES - V08MAR05A                                PAG.  51

ANUAL 06/07 * SETEMBRO 2006 PESADA S/SE 19H N/NE 19H * ANAT0 - FSE - C13
RELATORIO COMPLETO DO SISTEMA * AREA  2 * *              CEMIG               *

X----------------- D A D O S  -  B A R R A -------------------------X------------ F L U X O S  -  C I R C U I T O S ------------X
 DA BARRA      TENSAO GERACAO INJ EQV  CARGA   ELO CC  SHUNT    MOTOR
 NUM. KV TIPO   MOD/     MW/     MW/     MW/     MW/   Mvar/     MW/
     NOME       ANG     Mvar    Mvar    Mvar    Mvar   EQUIV    Mvar  PARA BARRA                    FLUXOS
                                                FLUXO % SHUNT L         NUM.     NOME     NC     MW    Mvar  MVA/V_d   TAP  DEFAS TIE
X------------X-------X-------X-------X-------X-------X-------X-------X----X------------X--X-------X-------X-------X------X-----X---X

  300    1  1   1.020   800.0     0.0     0.0     0.0     0.0     0.0
 EMBORCAC-3GR   -82.1  -153.9     0.0     0.0     0.0     0.0     0.0
                                                 66.6%                 320 EMBORCAC-500  1   800.0  -153.9   798.7
  301    1  1   1.000   320.0     0.0     0.0     0.0     0.0     0.0
 JAGUARA--4GR   -85.2     3.3     0.0     0.0     0.0     0.0     0.0
                                                 64.0%                 326 JAGUARA--345  1   320.0     3.3   320.0
  302    1  1   1.000   408.0     0.0     0.0     0.0     0.0     0.0
 N.PONTE--3GR   -84.2  -129.9     0.0     0.0     0.0     0.0     0.0
                                                 79.7%                 360 NPONTE---500  1   408.0  -129.9   428.2
  303    1  1   1.000   900.0     0.0     0.0     0.0     0.0     0.0
 S.SIMAO--4GR   -69.4  -157.3     0.0     0.0     0.0     0.0     0.0
                                                 52.5%                 370 SSIMAO---500  1   900.0  -157.3   913.6
  304    1  1   1.005   230.0     0.0     0.0     0.0     0.0     0.0
 T.MARIAS-5GR  -105.2   -74.3     0.0     0.0     0.0     0.0     0.0
                                                 60.1%                 381 TMARIAS--289  1   230.0   -74.3   240.5
  305    1  1   1.040   304.0     0.0     0.0     0.0     0.0     0.0
 V.GRANDE-4GR   -80.9    80.8     0.0     0.0     0.0     0.0     0.0
```

```
                                                                  67.2%                    396 VGRANDE--345  1   304.0    80.8   302.5
 306    1  1   1.000   105.0     0.0     0.0     0.0     0.0     0.0
GUILMAN--3GR  -112.1    -2.1     0.0     0.0     0.0     0.0     0.0
                                                                  65.6%                   1529 GUILMAN--230  1   105.0    -2.1   105.0                03
 307    1  0   1.003     1.4     0.0    92.2     0.0     8.4     0.0
AVATINGU-138   -88.0     0.0     0.0    28.5     0.0     0.0     0.0
                                                                  18.1%                    392 UBERLAN1-138  1     7.2   -13.0    14.8
                                                                  18.1%                    392 UBERLAN1-138  2     7.2   -13.0    14.8
                                                                  42.0%                    755 C.DOURADA138  1   -52.6     3.0    52.6                12
                                                                  42.0%                    755 C.DOURADA138  2   -52.6     3.0    52.5                12
 308  345  0   1.037     0.0     0.0     0.0     0.0     0.0     0.0
BARBACEN-345  -112.8     0.0     0.0     0.0     0.0     0.0     0.0
                                                                  37.2%                    309 BARBACEN-138  1    57.5    -6.3    55.8
                                                                  37.2%                    309 BARBACEN-138  2    57.5    -6.3    55.8
                                                                  10.5%                    331 JUIZFORA-345  1    58.7    21.4    60.3
                                                                  26.4%                    336 LAFAIETE-345  1   156.0   -17.6   151.4
                                                                  55.5%                    367 PIMENTA--345  1  -329.6     8.8   318.1
CEPEL - CENTRO DE PESQUISAS DE ENERGIA ELETRICA - PROGRAMA DE ANALISE DE REDES - V08MAR05A                                          PAG.  52

ANUAL 06/07 * SETEMBRO 2006 PESADA S/SE 19H N/NE 19H * ANAT0 - FSE - C13
RELATORIO COMPLETO DO SISTEMA * AREA  2 * *              CEMIG                *

X----------------- D A D O S  -  B A R R A ------------------------X------------ F L U X O S  -  C I R C U I T O S ------------X
 DA BARRA      TENSAO GERACAO INJ EQV  CARGA   ELO CC  SHUNT    MOTOR
 NUM. KV TIPO   MOD/     MW/     MW/     MW/     MW/   Mvar/     MW/
     NOME       ANG     Mvar    Mvar    Mvar    Mvar   EQUIV    Mvar  PARA BARRA                    FLUXOS
                                                FLUXO % SHUNT L         NUM.     NOME     NC     MW    Mvar  MVA/V_d   TAP  DEFAS TIE
X------------X-------X-------X-------X-------X-------X-------X-------X----X------------X--X-------X-------X-------X------X-----X---X

 309    1  0   1.039     0.0     0.0   116.1     0.0     0.0     0.0
BARBACEN-138  -114.2     0.0     0.0    14.9     0.0     0.0     0.0
                                                                  37.2%                    308 BARBACEN-345  1   -57.5     7.7    55.8 1.000F
                                                                  37.2%                    308 BARBACEN-345  2   -57.5     7.7    55.8 1.000F
                                                                  37.9%                    310 BARBACE-CAP1  1     0.0   -19.7    19.0 1.000F
                                                                  37.9%                    311 BARBACE-CAP2  1     0.0   -19.7    19.0 1.000F
                                                                  29.1%                   1516 CARANDAI-138  1    36.1   -11.2    36.4                03
                                                                   2.6%                   1522 ESMAN----138  1     2.7    -2.0     3.2                03
                                                                   2.6%                   1568 SDUMONT--138  1     2.6    -2.0     3.2                03
                                                                  37.9%                   1572 SJDELREY-138  1   -42.6    24.5    47.3                03
 310    1  0   1.053     0.0     0.0     0.0     0.0    20.0     0.0
BARBACE-CAP1  -114.2     0.0     0.0     0.0     0.0     0.0     0.0
                                                                  37.9%                    309 BARBACEN-138  1     0.0    20.0    19.0
 311    1  0   1.053     0.0     0.0     0.0     0.0    20.0     0.0
BARBACE-CAP2  -114.2     0.0     0.0     0.0     0.0     0.0     0.0
                                                                  37.9%                    309 BARBACEN-138  1     0.0    20.0    19.0
 312    1  1   1.020   312.0     0.0     0.0     0.0     0.0     0.0
MIRANDA--3GR   -80.5    36.7     0.0     0.0     0.0     0.0     0.0
                                                                  74.9%                    340 MIRANDA--138  1   312.0    36.7   308.0
 313  345  0   1.013     0.0     0.0     0.0     0.0     0.0     0.0
BARREIRO-345  -113.9     0.0     0.0     0.0     0.0     0.0     0.0
                                                                  78.5%                    316 BARREIRO-FIC  1   118.7    11.4   117.7 0.975F
                                                                  26.6%                    350 NEVES----345  1  -133.4   -77.2   152.1
                                                                  55.8%                    367 PIMENTA--345  1  -395.2     5.7   390.2
                                                                  14.6%                    372 TAQUARIL-345  1    54.8   -64.7    83.7
                                                                  81.8%                   1574 BARREIR1-FIC  1   117.3    41.2   122.7 0.957F
                                                                  81.8%                   1575 BARREIR2-FIC  2   117.3    41.2   122.7 0.957F
                                                                  84.1%                   1576 BARREIR3-FIC  3   120.6    42.4   126.2 0.957F
 314    1  0   1.036    11.0     0.0   343.7     0.0    85.0     0.0
BARREIRO-138  -118.4     0.0     0.0   140.1     0.0     0.0     0.0
                                                                  76.8%                    316 BARREIRO-FIC  1  -118.7    11.6   115.1 1.002*
```

```
                                                  24.4%                 1526 IGARAPE--138  1   -36.1     2.0    34.9                03
                                                  46.5%                 1540 JATOBA---138  1    68.9    21.5    69.7                03
                                                  44.3%                 1546 NLIMA----138  1    70.0    -4.6    67.7                03
                                                  25.2%                 1567 REGAP--1-138  1    38.3     8.5    37.9                03
                                                  78.1%                 1574 BARREIR1-FIC  1  -117.3   -31.1   117.2 1.002*
                                                  78.1%                 1575 BARREIR2-FIC  2  -117.3   -31.1   117.2 1.002*
                                                  80.3%                 1576 BARREIR3-FIC  3  -120.6   -32.0   120.5 1.002*
  315    1  1   1.030     0.0     0.0     0.0     0.0     0.0     0.0
 BARREIRO-SIN  -119.0   -13.6     0.0     0.0     0.0     0.0     0.0
                                                   8.8%                  316 BARREIRO-FIC  1     0.0   -13.6    13.2 1.000F
CEPEL - CENTRO DE PESQUISAS DE ENERGIA ELETRICA - PROGRAMA DE ANALISE DE REDES - V08MAR05A                                PAG.  53

ANUAL 06/07 * SETEMBRO 2006 PESADA S/SE 19H N/NE 19H * ANAT0 - FSE - C13
RELATORIO COMPLETO DO SISTEMA * AREA  2 * *              CEMIG              *

X----------------- D A D O S  -  B A R R A ------------------------X------------ F L U X O S  -  C I R C U I T O S ------------X
 DA BARRA      TENSAO GERACAO INJ EQV  CARGA   ELO CC  SHUNT    MOTOR
 NUM. KV TIPO   MOD/     MW/     MW/     MW/     MW/   Mvar/     MW/
     NOME       ANG     Mvar    Mvar    Mvar    Mvar   EQUIV    Mvar  PARA BARRA                    FLUXOS
                                                FLUXO % SHUNT L        NUM.     NOME     NC     MW    Mvar  MVA/V_d   TAP  DEFAS TIE
X------------X-------X-------X-------X-------X-------X-------X-------X----X------------X--X-------X-------X-------X------X-----X---X

  316    1  0   1.034     0.0     0.0     0.0     0.0     0.0     0.0
 BARREIRO-FIC  -119.0     0.0     0.0     0.0     0.0     0.0     0.0
                                                  76.5%                 313 BARREIRO-345  1  -118.7    -0.9   114.7
                                                  76.9%                 314 BARREIRO-138  1   118.7   -12.8   115.4
                                                   8.8%                 315 BARREIRO-SIN  1     0.0    13.7    13.2
  317    1 -1   1.003    54.0     0.0     0.0     0.0     0.0     0.0
 SOBRAGI-02MQ  -106.9   -20.0     0.0     0.0     0.0     0.0     0.0
                                                   0.6%                 327 SOBRAGI--138  1    54.0   -20.0    57.4
  318    1  0   1.019     0.0     0.0    55.9     0.0     8.1     0.0
 CASSIA---138   -93.8     0.0     0.0    16.4     0.0     0.0     0.0
                                                  43.1%                 187 M.MORAES-138  1   -54.0    -9.6    53.9                01
                                                  43.6%                 187 M.MORAES-138  2   -54.7    -9.4    54.5                01
                                                  27.3%                 362 PASSOS---138  1    26.1     5.3    26.2
                                                  27.8%                 362 PASSOS---138  2    26.7     5.3    26.7
  319  230  0   1.052     0.0     0.0     0.0     0.0     0.0     0.0
 CPENA----230  -114.5     0.0     0.0     0.0     0.0     0.0     0.0
                                                  42.8%                 394 VALADARE-230  1   149.3   -19.4   143.0
                                                  48.5%                4043 AIMORES--230  1  -170.1    13.3   162.1                41
                                                  62.4%                9008 CPENA----FIC  1    20.8     6.0    20.6 0.975F         01
  320  500  0   1.098     0.0     0.0     0.0     0.0     0.0     0.0
 EMBORCAC-500   -88.0     0.0     0.0     0.0     0.0     0.0     0.0                                   -88.6 SHL
                                                  34.0%                 210 ITUMBIAR-500  1  -723.1    71.0   661.6                01
                                                  18.7%   -88.6         233 SAMAMBAI-500  1   524.0  -103.7   486.4                01
                                                  63.4%                 300 EMBORCAC-3GR  1  -800.0   240.4   760.7 1.050F
                                                  17.9%                 321 EMBORCAC-138  1    15.4    57.0    53.8 1.025F
                                                  17.9%                 321 EMBORCAC-138  2    15.4    57.0    53.8 1.025F
                                                   7.1%                 360 NPONTE---500  1    98.2  -127.9   146.8
                                                  41.7%                 390 SGOTARDO-500  1   870.0  -193.8   811.6
  321    1  0   1.047     0.0     0.0     4.0     0.0     0.0     0.0
 EMBORCAC-138   -88.3     0.0     0.0     2.6     0.0     0.0     0.0
                                                  18.4%                 320 EMBORCAC-500  1   -15.4   -55.6    55.1
                                                  18.4%                 320 EMBORCAC-500  2   -15.4   -55.6    55.1
                                                  10.9%                 392 UBERLAN1-138  1    12.7     6.6    13.7
                                                  48.1%                 784 CATALAO  138  1    93.0    24.7    91.9                12
                                                  18.2%                1506 ARAGUARI-138  1    10.4    15.7    18.0                03
                                                  55.0%                1509 M.CARMELO138  1    71.3     5.3    68.2                03
                                                  59.2%                1519 COROMAND-138  1    77.3     4.6    74.0                03
                                                  63.8%                4053 CAPIM-1--138  1  -118.9    25.9   116.2                41
```

```
                                                   63.8%                 4053 CAPIM-1--138  2  -118.9    25.9   116.2                41
 322    1  0   1.009     0.0     0.0    22.1     0.0     0.0     0.0
FRUTAL---138   -84.5     0.0     0.0     7.9     0.0     0.0     0.0
                                                   18.6%                  190 PCOLOMBI-138  1   -22.1    -7.9    23.3                01
CEPEL - CENTRO DE PESQUISAS DE ENERGIA ELETRICA - PROGRAMA DE ANALISE DE REDES - V08MAR05A                                  PAG.  54

ANUAL 06/07 * SETEMBRO 2006 PESADA S/SE 19H N/NE 19H * ANAT0 - FSE - C13
RELATORIO COMPLETO DO SISTEMA * AREA  2 * *              CEMIG               *

X----------------- D A D O S  -  B A R R A ------------------------X------------ F L U X O S  -  C I R C U I T O S ------------X
 DA BARRA      TENSAO GERACAO INJ EQV  CARGA   ELO CC  SHUNT    MOTOR
 NUM. KV TIPO   MOD/     MW/     MW/     MW/     MW/   Mvar/     MW/
     NOME       ANG     Mvar    Mvar    Mvar    Mvar   EQUIV    Mvar  PARA BARRA                    FLUXOS
                                                FLUXO % SHUNT L         NUM.     NOME     NC     MW    Mvar  MVA/V_d   TAP  DEFAS TIE
X------------X-------X-------X-------X-------X-------X-------X-------X----X------------X--X-------X-------X-------X------X-----X---X

 323    1  0   1.050     0.0     0.0     0.0     0.0     0.0     0.0
ITUTING2-138  -104.4     0.0     0.0     0.0     0.0     0.0     0.0
                                                   70.0%                 1514 BOZEL----138  1    91.1   -11.5    87.5                03
                                                   37.4%                 1541 LAVRAS2--138  1    59.6    19.8    59.8                03
                                                   45.1%                 4005 TCORA2-1-138  1    58.3    10.1    56.4                03
                                                   25.2%                 4009 MINDUR-1-138  1    30.5    12.8    31.5                03
                                                   52.1%                 4056 ITUTING-FIC1  1  -122.1   -15.9   117.3 0.997*
                                                   50.1%                 4058 ITUTING-FIC2  1  -117.4   -15.3   112.8 0.997*
 324    1  0   1.052     0.0     0.0     0.0     0.0    55.3     0.0
MESQ.T3-13.4  -119.6     0.0     0.0     0.0     0.0     0.0     0.0
                                                   39.6%                 1591 MESQUIT3-FIC  1     0.0    55.3    52.6 0.970F
 325  500  0   1.117     0.0     0.0     0.0     0.0     0.0     0.0
JAGUARA--500   -92.2     0.0     0.0     0.0     0.0     0.0     0.0                                  -340.6 SHL
                                                   43.7%                  326 JAGUARA--345  1  -187.6   -54.4   174.9 1.100F
                                                   43.7%                  326 JAGUARA--345  2  -187.6   -54.4   174.9 1.100F
                                                   43.7%                  326 JAGUARA--345  3  -187.6   -54.4   174.9 1.100F
                                                   20.2%                  360 NPONTE---500  1  -503.9    60.0   454.4
                                                   29.9%  -113.5          370 SSIMAO---500  1  -728.8   111.8   660.2
                                                   46.4%  -113.5         4050 BDESPAC3-500  1   897.8    -4.3   803.8
                                                   46.4%  -113.5         4050 BDESPAC3-500  2   897.8    -4.3   803.8
 326  345  0   1.028     0.0     0.0     0.0     0.0     0.0     0.0
JAGUARA--345   -90.0     0.0     0.0     0.0     0.0     0.0     0.0
                                                   64.5%                  134 LBARRETO-345  1  -561.7   -96.1   554.5                01
                                                   62.4%                  301 JAGUARA--4GR  1  -320.0    23.6   312.2 1.025F
                                                   48.1%                  325 JAGUARA--500  1   187.6    62.4   192.4
                                                   48.1%                  325 JAGUARA--500  2   187.6    62.4   192.4
                                                   48.1%                  325 JAGUARA--500  3   187.6    62.4   192.4
                                                   32.8%                  328 JAGUARA-FT-R  1    37.9    33.4    49.2
                                                   32.8%                  328 JAGUARA-FT-R  2    37.9    33.4    49.2
                                                   49.3%                  367 PIMENTA--345  1   309.9   -61.5   307.4
                                                   49.3%                  367 PIMENTA--345  2   309.9   -61.5   307.4
                                                   59.5%                  396 VGRANDE--345  1  -376.7   -58.8   371.0
 327    1  0   1.033     0.0     0.0     4.0     0.0     0.0     0.0
SOBRAGI--138  -111.0     0.0     0.0     1.7     0.0     0.0     0.0
                                                    0.6%                  317 SOBRAGI-02MQ  1   -54.0    24.4    57.4 1.000F
                                                   43.4%                  332 JUIZFORA-138  1    50.0   -26.1    54.6
 328    1  0   1.069     0.0     0.0     0.0     0.0     0.0     0.0
JAGUARA-FT-R   -91.6     0.0     0.0     0.0     0.0     0.0     0.0
                                                   30.8%                  326 JAGUARA--345  1   -37.9   -31.6    46.2 1.065*
                                                   30.8%                  326 JAGUARA--345  2   -37.9   -31.6    46.2 1.065*
                                                   30.8%                  330 JAGUARA--138  1    37.9    31.6    46.2
                                                   30.8%                  330 JAGUARA--138  2    37.9    31.6    46.2
CEPEL - CENTRO DE PESQUISAS DE ENERGIA ELETRICA - PROGRAMA DE ANALISE DE REDES - V08MAR05A                                  PAG.  55
```

ANUAL 06/07 * SETEMBRO 2006 PESADA S/SE 19H N/NE 19H * ANAT0 - FSE - C13
RELATORIO COMPLETO DO SISTEMA * AREA 2 * * CEMIG *

| DA BARRA NUM. KV TIPO NOME | TENSAO MOD/ ANG | GERACAO MW/ Mvar | INJ EQV MW/ Mvar | CARGA MW/ Mvar | ELO CC MW/ Mvar FLUXO % | SHUNT Mvar/ EQUIV SHUNT L | MOTOR MW/ Mvar | PARA BARRA NUM. | NOME | NC | MW | FLUXOS Mvar | MVA/V_d | TAP | DEFAS | TIE |
|---|---|---|---|---|---|---|---|---|---|---|---|---|---|---|---|---|
| 329 1 0 | 1.015 | 0.0 | 0.0 | 0.0 | 0.0 | 0.0 | 0.0 | | | | | | | | | |
| MESQ.T2-13.4 | -119.6 | 0.0 | 0.0 | 0.0 | 0.0 | 0.0 | 0.0 | | | | | | | | | |
| | | | | | 0.0% | | | 1590 | MESQUIT2-FIC | 1 | 0.0 | 0.0 | 0.0 | 0.970F | | |
| 330 138 0 | 1.051 | 0.0 | 0.0 | 0.0 | 0.0 | 0.0 | 0.0 | | | | | | | | | |
| JAGUARA--138 | -92.8 | 0.0 | 0.0 | 0.0 | 0.0 | 0.0 | 0.0 | | | | | | | | | |
| | | | | | 14.5% | | | 187 | M.MORAES-138 | 1 | -14.1 | 4.0 | 13.9 | | | 01 |
| | | | | | 30.8% | | | 328 | JAGUARA-FT-R | 1 | -37.9 | -30.3 | 46.2 | | | |
| | | | | | 30.8% | | | 328 | JAGUARA-FT-R | 2 | -37.9 | -30.3 | 46.2 | | | |
| | | | | | 57.2% | | | 1508 | ARAXA----138 | 1 | 56.5 | 11.9 | 54.9 | | | 03 |
| | | | | | 41.6% | | | 1508 | ARAXA----138 | 2 | 53.7 | 10.1 | 52.0 | | | 03 |
| | | | | | 14.5% | | | 1564 | SACRAMEN-138 | 1 | 22.0 | 16.9 | 26.3 | | | 03 |
| | | | | | 28.6% | | | 1579 | UBERABA6-138 | 1 | -42.4 | 17.8 | 43.7 | | | 03 |
| 331 345 0 | 1.026 | 0.0 | 0.0 | 0.0 | 0.0 | 0.0 | 0.0 | | | | | | | | | |
| JUIZFORA-345 | -113.5 | 0.0 | 0.0 | 0.0 | 0.0 | 0.0 | 0.0 | | | | | | | | | |
| | | | | | 14.3% | | | 308 | BARBACEN-345 | 1 | -58.6 | -60.5 | 82.1 | | | |
| | | | | | 24.8% | | | 363 | JFORAT3--FIC | 1 | 24.3 | 29.3 | 37.1 | 0.975F | | |
| | | | | | 25.1% | | | 366 | JFORAT4--FIC | 1 | 24.7 | 29.7 | 37.7 | 0.975F | | |
| | | | | | 6.3% | | | 369 | JFORAT5--FIC | 1 | 9.6 | 1.4 | 9.5 | 0.975F | | |
| 332 1 0 | 1.040 | 10.0 | 0.0 | 146.5 | 0.0 | 35.0 | 0.0 | | | | | | | | | |
| JUIZFORA-138 | -114.1 | 0.0 | 0.0 | 61.0 | 0.0 | 0.0 | 0.0 | | | | | | | | | |
| | | | | | 42.5% | | | 327 | SOBRAGI--138 | 1 | -48.9 | 26.5 | 53.5 | | | |
| | | | | | 24.1% | | | 363 | JFORAT3--FIC | 1 | -24.3 | -28.7 | 36.2 | | | |
| | | | | | 24.5% | | | 366 | JFORAT4--FIC | 1 | -24.7 | -29.1 | 36.7 | | | |
| | | | | | 2.0% | | | 1554 | PIAU-----138 | 1 | 0.4 | -1.9 | 1.9 | | | 03 |
| | | | | | 7.8% | | | 1563 | J.FORA7--138 | 1 | 10.2 | 0.0 | 9.8 | | | 03 |
| | | | | | 49.8% | | | 4018 | CPM------138 | 1 | -49.2 | 7.4 | 47.8 | | | 03 |
| 333 1 0 | 1.039 | 0.0 | 0.0 | 0.0 | 0.0 | 0.0 | 0.0 | | | | | | | | | |
| JFORA---CAP1 | -114.1 | 0.0 | 0.0 | 0.0 | 0.0 | 0.0 | 0.0 | | | | | | | | | |
| | | | | | 0.0% | | | 363 | JFORAT3--FIC | 1 | 0.0 | 0.0 | 0.0 | | | |
| 334 1 0 | 1.039 | 0.0 | 0.0 | 0.0 | 0.0 | 0.0 | 0.0 | | | | | | | | | |
| JFORA---CAP2 | -114.1 | 0.0 | 0.0 | 0.0 | 0.0 | 0.0 | 0.0 | | | | | | | | | |
| | | | | | 0.0% | | | 366 | JFORAT4--FIC | 1 | 0.0 | 0.0 | 0.0 | | | |
| 335 1 0 | 1.052 | 0.0 | 0.0 | 0.0 | 0.0 | 0.0 | 0.0 | | | | | | | | | |
| JFORA---CAP3 | -113.8 | 0.0 | 0.0 | 0.0 | 0.0 | 0.0 | 0.0 | | | | | | | | | |
| | | | | | 0.0% | | | 369 | JFORAT5--FIC | 1 | 0.0 | 0.0 | 0.0 | | | |
| 336 345 0 | 1.033 | 0.0 | 0.0 | 0.0 | 0.0 | 0.0 | 0.0 | | | | | | | | | |
| LAFAIETE-345 | -114.7 | 0.0 | 0.0 | 0.0 | 0.0 | 0.0 | 0.0 | | | | | | | | | |
| | | | | | 26.4% | | | 308 | BARBACEN-345 | 1 | -155.4 | -15.0 | 151.1 | | | |
| | | | | | 59.4% | | | 337 | LAFAIETE-138 | 1 | 85.5 | 34.2 | 89.2 | 0.975F | | |
| | | | | | 59.4% | | | 337 | LAFAIETE-138 | 2 | 85.5 | 34.2 | 89.2 | 0.975F | | |
| | | | | | 7.7% | | | 385 | OPRETO2--345 | 1 | -15.7 | -53.4 | 53.9 | | | |



ANUAL 06/07 * SETEMBRO 2006 PESADA S/SE 19H N/NE 19H * ANAT0 - FSE - C13
RELATORIO COMPLETO DO SISTEMA * AREA 2 * * CEMIG *

```
                                                                FLUXO % SHUNT L          NUM.     NOME     NC     MW    Mvar  MVA/V_d   TAP  DEFAS TIE
X------------X-------X-------X-------X-------X-------X-------X-------X----X------------X--X-------X-------X-------X------X-----X---X

  337    1  0   1.045     0.0     0.0   126.3     0.0     0.0     0.0
 LAFAIETE-138  -116.8     0.0     0.0    29.1     0.0     0.0     0.0
                                                 58.0%                   336 LAFAIETE-345  1   -85.5   -30.6    86.9
                                                 58.0%                   336 LAFAIETE-345  2   -85.5   -30.6    86.9
                                                 38.6%                   338 LAFAIET-CAP1  1     0.0   -20.2    19.3
                                                 38.6%                   339 LAFAIET-CAP2  1     0.0   -20.2    19.3
                                                 16.9%                  1516 CARANDAI-138  1   -14.8    16.4    21.1               03
                                                 82.6%                  1544 MURTINHO-138  1    81.7    14.2    79.3               03
                                                 25.5%                  1548 OPRETO---138  1    31.2    11.7    31.9               03
                                                 46.9%                  1572 SJDELREY-138  1   -53.3    30.1    58.6               03
  338    1  0   1.073     0.0     0.0     0.0     0.0    20.7     0.0
 LAFAIET-CAP1  -116.8     0.0     0.0     0.0     0.0     0.0     0.0
                                                 38.6%                   337 LAFAIETE-138  1     0.0    20.7    19.3 1.000F
  339    1  0   1.073     0.0     0.0     0.0     0.0    20.7     0.0
 LAFAIET-CAP2  -116.8     0.0     0.0     0.0     0.0     0.0     0.0
                                                 38.6%                   337 LAFAIETE-138  1     0.0    20.7    19.3 1.000F
  340    1  0   1.039     0.0     0.0     8.2     0.0     0.0     0.0
 MIRANDA--138   -85.4     0.0     0.0     1.7     0.0     0.0     0.0
                                                 73.1%                   312 MIRANDA--3GR  1  -312.0    -9.4   300.5 1.025F
                                                 63.2%                  1549 N.PONTE--138  1    82.1     0.8    79.0               03
                                                 35.1%                  1582 UBERLAN6-138  1    65.6     2.2    63.2               03
                                                 35.5%                  1582 UBERLAN6-138  2    66.4     2.1    63.9               03
                                                 47.5%                  1587 UBERLAN7-138  1    89.7     2.7    86.4               03
  341  345  0   1.021     0.0     0.0     0.0     0.0     0.0     0.0
 MCLAROS--345  -114.1     0.0     0.0     0.0     0.0     0.0     0.0                                   -52.1 SHL
                                                 68.8%                   342 MCLAROS2-138  1   105.0     8.6   103.2 0.968*
                                                 63.4%                   342 MCLAROS2-138  2    96.7     7.9    95.1 0.968*
                                                 68.8%                   342 MCLAROS2-138  3   105.0     8.6   103.2 0.968*
                                                 13.1%                   398 VPALMA---345  1   -39.4   -85.0    91.8
                                                 23.3%   -52.1          4065 IRAPE----345  1  -267.2    59.9   268.3
  342    1  0   1.052     2.0     0.0   198.3     0.0    70.4     0.0
 MCLAROS2-138  -116.7     0.0     0.0    50.7     0.0     0.0     0.0
                                                 66.6%                   341 MCLAROS--345  1  -105.0    -3.9    99.9
                                                 61.4%                   341 MCLAROS--345  2   -96.7    -3.6    92.1
                                                 66.6%                   341 MCLAROS--345  3  -105.0    -3.9    99.9
                                                 87.3%                  1542 MCLAROS1-138  1   110.4    31.2   109.1               03
  343    1  1   1.025   168.0     0.0     0.0     0.0     0.0     0.0
 IGARAPAV-4GR   -74.3    27.5     0.0     0.0     0.0     0.0     0.0
                                                 79.1%                  1525 IGARAPAV-138  1   168.0    27.5   166.1 0.971F
CEPEL - CENTRO DE PESQUISAS DE ENERGIA ELETRICA - PROGRAMA DE ANALISE DE REDES - V08MAR05A                                  PAG.  57

ANUAL 06/07 * SETEMBRO 2006 PESADA S/SE 19H N/NE 19H * ANAT0 - FSE - C13
RELATORIO COMPLETO DO SISTEMA * AREA  2 * *              CEMIG                *

X----------------- D A D O S  -  B A R R A ------------------------X------------ F L U X O S  -  C I R C U I T O S ------------X
 DA BARRA      TENSAO GERACAO INJ EQV  CARGA   ELO CC  SHUNT    MOTOR
 NUM. KV TIPO   MOD/     MW/     MW/     MW/     MW/   Mvar/     MW/
     NOME       ANG     Mvar    Mvar    Mvar    Mvar   EQUIV    Mvar  PARA BARRA                    FLUXOS
                                                FLUXO % SHUNT L          NUM.     NOME     NC     MW    Mvar  MVA/V_d   TAP  DEFAS TIE
X------------X-------X-------X-------X-------X-------X-------X-------X----X------------X--X-------X-------X-------X------X-----X---X

  344  500  0   1.083     0.0     0.0     0.0     0.0     0.0     0.0
 MESQUITA-500  -117.6     0.0     0.0     0.0     0.0     0.0     0.0
                                                 33.6%                  1589 MESQUIT1-FIC  1   139.5    42.0   134.5 1.025F
                                                 34.0%                  1590 MESQUIT2-FIC  1   141.2    41.9   136.0 1.025F
                                                 33.6%                  1591 MESQUIT3-FIC  1   138.3    45.4   134.3 1.025F
                                                 31.2%                  4028 VESPA2-5-500  1  -419.0  -129.4   404.8
```

```
 345  230  0   1.048     0.0     0.0     0.0     0.0     0.0     0.0
MESQUITA-230  -119.4     0.0     0.0     0.0     0.0     0.0     0.0
                                                 4.0%                 394 VALADARE-230  2     8.6    -9.2    12.0
                                                54.6%                1530 IPATINGT-230  1   149.6    87.9   165.6                03
                                                54.6%                1530 IPATINGT-230  2   149.6    87.9   165.6                03
                                                34.9%                1589 MESQUIT1-FIC  1  -139.5   -43.9   139.6 1.000F
                                                34.9%                1590 MESQUIT2-FIC  1  -141.2   -37.2   139.4 1.000F
                                                39.9%                1591 MESQUIT3-FIC  1  -138.3   -94.2   159.7 1.000F
                                                 5.1%                1593 VALAD5-2-230  1     7.1   -11.3    12.7
                                                33.4%                9045 USIMINA2-230  1   104.2    20.1   101.3                03
 346    1  1   1.020     0.0     0.0     0.0     0.0     0.0     0.0
MESQUITA-1CS  -119.6     6.6     0.0     0.0     0.0     0.0     0.0
                                                 4.9%                1589 MESQUIT1-FIC  1     0.0     6.6     6.5 0.970F
 347    1  0   1.078     0.0     0.0     0.0     0.0     0.0     0.0
VALADAR1-FIC  -121.7     0.0     0.0     0.0     0.0     0.0     0.0
                                                36.2%                 348 VALADARE-138  1    25.5    -3.7    23.9
                                                37.7%                 348 VALADARE-138  2    26.6    -3.8    24.9
                                                37.0%                 394 VALADARE-230  1   -26.0     3.7    24.4
                                                37.0%                 394 VALADARE-230  2   -26.0     3.7    24.4
 348    1  0   1.052     6.0     0.0   126.3     0.0    31.2     0.0
VALADARE-138  -121.9     0.0     0.0    30.8     0.0     0.0     0.0
                                                37.1%                 347 VALADAR1-FIC  1   -25.5     3.7    24.5 0.975*
                                                38.7%                 347 VALADAR1-FIC  2   -26.6     3.9    25.6 0.975*
                                                54.9%                 383 VALADAR2-FIC  1   -37.7     5.5    36.2 0.975*
                                                43.9%                 383 VALADAR2-FIC  2   -30.1     4.4    29.0 0.975*
                                                 8.4%                1557 TOTONI---138  1    -0.4    -8.4     8.0                03
                                                 8.7%                1557 TOTONI---138  2     0.0    -8.7     8.3                03
 349  500  0   1.100     0.0     0.0     0.0     0.0     0.0     0.0
NEVES----500  -112.0     0.0     0.0     0.0     0.0     0.0     0.0
                                                66.6%                 353 NEVES----138  1   213.4    52.1   199.7 1.025F
                                                19.6%                 356 NEVES-T1-FIC  1    86.0     2.0    78.2 1.075F
                                                19.6%                 357 NEVES-T2-FIC  1    86.0     2.0    78.2 1.075F
                                                66.9%                 358 NEV-FIC2-138  1   214.9    51.0   200.8 1.025F
                                                67.2%                 359 NEV-FIC1-138  1   215.2    53.4   201.5 1.025F
                                                49.1%                4028 VESPA2-5-500  1   700.4    22.1   637.0
                                                40.1%                4050 BDESPAC3-500  1  -758.4   -91.3   694.4
                                                40.1%                4050 BDESPAC3-500  2  -757.6   -91.3   693.6
CEPEL - CENTRO DE PESQUISAS DE ENERGIA ELETRICA - PROGRAMA DE ANALISE DE REDES - V08MAR05A                                PAG.  58

ANUAL 06/07 * SETEMBRO 2006 PESADA S/SE 19H N/NE 19H * ANAT0 - FSE - C13
RELATORIO COMPLETO DO SISTEMA * AREA  2 * *              CEMIG              *

X----------------- D A D O S  -  B A R R A -------------------------X------------ F L U X O S  -  C I R C U I T O S ------------X
 DA BARRA      TENSAO GERACAO INJ EQV  CARGA   ELO CC  SHUNT    MOTOR
 NUM. KV TIPO   MOD/     MW/     MW/     MW/     MW/   Mvar/     MW/
     NOME       ANG     Mvar    Mvar    Mvar    Mvar   EQUIV    Mvar  PARA BARRA                    FLUXOS
                                                FLUXO % SHUNT L        NUM.     NOME     NC     MW    Mvar  MVA/V_d   TAP  DEFAS TIE
X------------X-------X-------X-------X-------X-------X-------X-------X----X------------X--X-------X-------X-------X------X-----X---X

 350  345  0   1.023     0.0     0.0     0.0     0.0     0.0     0.0
NEVES----345  -113.0     0.0     0.0     0.0     0.0     0.0     0.0
                                                25.0%                 313 BARREIRO-345  1   133.7    59.2   142.9
                                                21.0%                 356 NEVES-T1-FIC  1   -86.0    -0.5    84.1 1.000F
                                                21.0%                 357 NEVES-T2-FIC  1   -86.0    -0.5    84.1 1.000F
                                                15.1%                 372 TAQUARIL-345  1   125.3    21.7   124.3
                                                24.2%                 380 TMARIAS--345  1   -86.9   -80.0   115.5
 351    1  0   1.023     0.0     0.0     0.0     0.0     0.0     0.0
NEVES-1--REA  -113.1     0.0     0.0     0.0     0.0     0.0     0.0
                                                 0.0%                 356 NEVES-T1-FIC  1     0.0     0.0     0.0 1.000F
 352    1  0   1.023     0.0     0.0     0.0     0.0     0.0     0.0
```

```
 NEVES-2--REA  -113.3     0.0     0.0     0.0     0.0     0.0     0.0
                                                 0.0%                    357 NEVES-T2-FIC  1     0.0     0.0     0.0 1.000F
  353    1  0   1.055     2.0     0.0   259.6     0.0   184.2     0.0
 NEVES----138  -117.1     0.0     0.0   102.8     0.0     0.0     0.0
                                                68.2%                    349 NEVES----500  1  -213.4   -32.4   204.7
                                                68.0%                    358 NEV-FIC2-138  1  -214.9    -9.2   204.0 1.000F
                                                70.0%                    359 NEV-FIC1-138  1  -215.2   -53.0   210.1
                                                59.4%                   1523 FMBETIM3-138  1   103.9    46.8   108.1                03
                                                56.3%                   1565 CINCO--1-138  1    84.4    28.4    84.4                03
                                                38.3%                   4021 MATOZI-1-138  1    78.0    33.6    80.5                03
                                                21.2%                   4022 PLEOP3-1-138  1    41.0    23.0    44.6                03
                                                45.6%                   4024 NEVES2-1-138  1    66.1    29.1    68.4                03
                                                12.4%                   4025 SLUZI2-1-138  1    12.5    15.1    18.6                03
  354    1  1   1.040     0.0     0.0     0.0     0.0     0.0     0.0
 NEVES-1--1CS  -117.4   -21.8     0.0     0.0     0.0     0.0     0.0
                                                15.7%                    358 NEV-FIC2-138  1     0.0   -21.8    20.9 1.000F
  355    1  1   1.040     0.0     0.0     0.0     0.0     0.0     0.0
 NEVES-2--1CS  -117.3    19.6     0.0     0.0     0.0     0.0     0.0
                                                14.2%                    359 NEV-FIC1-138  1     0.0    19.6    18.9 0.975F
  356  345  0   1.023     0.0     0.0     0.0     0.0     0.0     0.0
 NEVES-T1-FIC  -113.1     0.0     0.0     0.0     0.0     0.0     0.0
                                                21.0%                    349 NEVES----500  1   -86.0    -0.3    84.1
                                                21.0%                    350 NEVES----345  1    86.0     0.3    84.1
                                                 0.0%                    351 NEVES-1--REA  1     0.0     0.0     0.0
  357    1  0   1.023     0.0     0.0     0.0     0.0     0.0     0.0
 NEVES-T2-FIC  -113.3     0.0     0.0     0.0     0.0     0.0     0.0
                                                21.0%                    349 NEVES----500  1   -86.0    -0.1    84.1
                                                21.0%                    350 NEVES----345  1    86.0     0.1    84.1
                                                 0.0%                    352 NEVES-2--REA  1     0.0     0.0     0.0
CEPEL - CENTRO DE PESQUISAS DE ENERGIA ELETRICA - PROGRAMA DE ANALISE DE REDES - V08MAR05A                          PAG.  59

ANUAL 06/07 * SETEMBRO 2006 PESADA S/SE 19H N/NE 19H * ANAT0 - FSE - C13
RELATORIO COMPLETO DO SISTEMA * AREA  2 * *              CEMIG              *

X----------------- D A D O S  -  B A R R A ------------------------X------------ F L U X O S  -  C I R C U I T O S ------------X
 DA BARRA      TENSAO GERACAO INJ EQV  CARGA   ELO CC  SHUNT    MOTOR
 NUM. KV TIPO   MOD/     MW/     MW/     MW/     MW/   Mvar/     MW/
     NOME       ANG     Mvar    Mvar    Mvar    Mvar   EQUIV    Mvar  PARA BARRA                    FLUXOS
                                                FLUXO % SHUNT L         NUM.     NOME     NC     MW    Mvar  MVA/V_d   TAP  DEFAS TIE
X------------X-------X-------X-------X-------X-------X-------X-------X----X------------X--X-------X-------X-------X------X-----X---X

  358    1  0   1.054     0.0     0.0     0.0     0.0     0.0     0.0
 NEV-FIC2-138  -117.4     0.0     0.0     0.0     0.0     0.0     0.0
                                                68.6%                    349 NEVES----500  1  -214.9   -30.1   205.8
                                                68.0%                    353 NEVES----138  1   214.9     8.0   204.0
                                                15.7%                    354 NEVES-1--1CS  1     0.0    22.1    20.9
  359    1  0   1.054     0.0     0.0     0.0     0.0     0.0     0.0
 NEV-FIC1-138  -117.3     0.0     0.0     0.0     0.0     0.0     0.0
                                                68.8%                    349 NEVES----500  1  -215.2   -32.7   206.5
                                                70.0%                    353 NEVES----138  1   215.2    52.1   210.1 1.000F
                                                13.8%                    355 NEVES-2--1CS  1     0.0   -19.4    18.4
  360  500  0   1.105     0.0     0.0     0.0     0.0     0.0     0.0
 NPONTE---500   -88.6     0.0     0.0     0.0     0.0     0.0     0.0
                                                74.2%                    302 N.PONTE--3GR  1  -408.0   165.4   398.3 1.075F
                                                 4.3%                    320 EMBORCAC-500  1   -98.1     9.2    89.2
                                                21.5%                    325 JAGUARA--500  1   506.1  -174.6   484.4
  361    1  0   1.052     0.0     0.0     9.6     0.0     0.0     0.0
 JFORAT5--138  -113.8     0.0     0.0     1.4     0.0     0.0     0.0
                                                 6.2%                    369 JFORAT5--FIC  1    -9.6    -1.4     9.2
  362    1  0   1.003     0.0     0.0    52.3     0.0     4.2     0.0
```

```
 PASSOS---138   -95.1     0.0     0.0    18.2     0.0     0.0     0.0
                                             27.8%                  318 CASSIA---138  1   -25.9    -7.0    26.7
                                             28.4%                  318 CASSIA---138  2   -26.4    -6.9    27.2
  363    1  0   1.039     0.0     0.0     0.0     0.0     0.0     0.0
 JFORAT3--FIC  -114.1     0.0     0.0     0.0     0.0     0.0     0.0
                                             24.1%                  331 JUIZFORA-345  1   -24.3   -28.7    36.2
                                             24.1%                  332 JUIZFORA-138  1    24.3    28.7    36.2 1.000F
                                              0.0%                  333 JFORA---CAP1  1     0.0     0.0     0.0 1.000F
  364    1  0   1.029     6.0     0.0   104.6     0.0     9.5     0.0
 PCALDAS1-138   -93.7     0.0     0.0    36.9     0.0     0.0     0.0
                                             19.8%                  170 P.CALDAS-138  1   -98.6   -27.4    99.4              01
  365    1  0   1.029     0.0     0.0    49.5     0.0    10.2     0.0
 PCALDAS2-138   -93.7     0.0     0.0    21.5     0.0     0.0     0.0
                                              9.8%                  170 P.CALDAS-138  1   -49.5   -11.3    49.3              01
  366    1  0   1.039     0.0     0.0     0.0     0.0     0.0     0.0
 JFORAT4--FIC  -114.1     0.0     0.0     0.0     0.0     0.0     0.0
                                             24.5%                  331 JUIZFORA-345  1   -24.7   -29.1    36.7
                                             24.5%                  332 JUIZFORA-138  1    24.7    29.1    36.7 1.000F
                                              0.0%                  334 JFORA---CAP2  1     0.0     0.0     0.0 1.000F
```



```
X----------------- D A D O S  -  B A R R A ------------------------X------------ F L U X O S  -  C I R C U I T O S ------------X
 DA BARRA      TENSAO GERACAO INJ EQV  CARGA   ELO CC  SHUNT    MOTOR
 NUM. KV TIPO   MOD/     MW/     MW/     MW/     MW/   Mvar/     MW/
     NOME       ANG     Mvar    Mvar    Mvar    Mvar   EQUIV    Mvar  PARA BARRA                    FLUXOS
                                                FLUXO % SHUNT L         NUM.     NOME     NC     MW    Mvar  MVA/V_d   TAP  DEFAS TIE
X------------X-------X-------X-------X-------X-------X-------X-------X----X------------X--X-------X-------X-------X------X-----X---X

  367    1  0   1.034     0.0     0.0     0.0     0.0     0.0     0.0
 PIMENTA--345   -99.6     0.0     0.0     0.0     0.0     0.0     0.0
                                             91.2%                  136 FURNAS---345  1  -684.6    44.3   663.6              01
                                             57.6%                  308 BARBACEN-345  1   336.5   -57.7   330.2
                                             56.1%                  313 BARREIRO-345  1   405.3   -10.9   392.2
                                             47.4%                  326 JAGUARA--345  1  -305.4    13.9   295.7
                                             47.4%                  326 JAGUARA--345  2  -305.4    13.9   295.7
                                             49.0%                  368 PIMENTA--138  1    75.7     6.5    73.5 0.975F
                                             53.4%                  368 PIMENTA--138  2    82.6     7.1    80.2 0.975F
                                             69.0%                  372 TAQUARIL-345  1   395.4   -17.1   382.8
  368    1  0   1.058     0.0     0.0     0.0     0.0     0.0     0.0
 PIMENTA--138  -101.4     0.0     0.0     0.0     0.0     0.0     0.0
                                             47.8%                  367 PIMENTA--345  1   -75.7    -4.0    71.7
                                             52.1%                  367 PIMENTA--345  2   -82.6    -4.4    78.2
                                             67.2%                 1510 ARCOS----138  1    88.7     5.0    84.0              03
                                             52.7%                 1528 IGUATAMA-138  1    69.5     3.5    65.8              03
  369    1  0   1.052     0.0     0.0     0.0     0.0     0.0     0.0
 JFORAT5--FIC  -113.8     0.0     0.0     0.0     0.0     0.0     0.0
                                              6.2%                  331 JUIZFORA-345  1    -9.6    -1.4     9.2
                                              0.0%                  335 JFORA---CAP3  1     0.0     0.0     0.0 1.000F
                                              6.2%                  361 JFORAT5--138  1     9.6     1.4     9.2 1.000F
  370    1  0   1.072     0.0     0.0     0.0     0.0     0.0     0.0
 SSIMAO---500   -74.7     0.0     0.0     0.0     0.0     0.0     0.0                                -209.2 SHL
                                             31.5%  -104.6          210 ITUMBIAR-500  1   557.3   -74.8   524.5              01
                                             50.0%                  303 S.SIMAO--4GR  1  -900.0   245.5   870.1 1.050F
                                             32.2%  -104.6          325 JAGUARA--500  1   742.3  -164.2   709.1
                                             16.9%                  535 AVERMELH-500  1  -399.6    -6.5   372.8              05
  371    1  0   1.154     0.0     0.0     0.0     0.0     0.0     0.0
 SGONCAL1-REA  -112.6     0.0     0.0     0.0     0.0     0.0     0.0
```

```
                                                  0.0%                 379 SGONCAL1-FIC  1     0.0     0.0     0.0 1.100F
 372  345  0   1.016     0.0     0.0     0.0     0.0     0.0     0.0
TAQUARIL-345  -114.1     0.0     0.0     0.0     0.0     0.0     0.0
                                                 13.5%                 313 BARREIRO-345  1   -54.7    56.0    77.1
                                                 15.9%                 350 NEVES----345  1  -125.1   -45.8   131.1
                                                 68.6%                 367 PIMENTA--345  1  -386.6    -0.2   380.5
                                                 40.3%                 373 TAQUARIL-230  1    91.4   -11.4    90.7
                                                 40.3%                 373 TAQUARIL-230  2    91.4   -11.4    90.7
                                                 39.0%                 373 TAQUARIL-230  3    88.4   -11.0    87.7
                                                 71.7%                 376 TAQUARIL-138  1   121.8   109.9   161.4
                                                 71.7%                 376 TAQUARIL-138  2   121.8   109.9   161.4
                                                 28.5%                 385 OPRETO2--345  1    51.6  -195.9   199.3
CEPEL - CENTRO DE PESQUISAS DE ENERGIA ELETRICA - PROGRAMA DE ANALISE DE REDES - V08MAR05A                          PAG.  61

ANUAL 06/07 * SETEMBRO 2006 PESADA S/SE 19H N/NE 19H * ANAT0 - FSE - C13
RELATORIO COMPLETO DO SISTEMA * AREA  2 * *              CEMIG              *

X----------------- D A D O S  -  B A R R A -------------------------X------------ F L U X O S  -  C I R C U I T O S ------------X
 DA BARRA      TENSAO GERACAO INJ EQV  CARGA   ELO CC  SHUNT    MOTOR
 NUM. KV TIPO   MOD/     MW/     MW/     MW/     MW/   Mvar/     MW/
     NOME       ANG     Mvar    Mvar    Mvar    Mvar   EQUIV    Mvar  PARA BARRA                    FLUXOS
                                                FLUXO % SHUNT L        NUM.     NOME     NC     MW    Mvar  MVA/V_d   TAP  DEFAS TIE
X------------X-------X-------X-------X-------X-------X-------X-------X----X------------X--X-------X-------X-------X------X-----X---X

 373  230  0   1.039     0.0     0.0     0.0     0.0     0.0     0.0
TAQUARIL-230  -115.5     0.0     0.0     0.0     0.0     0.0     0.0
                                                 39.6%                 372 TAQUARIL-345  1   -91.4    13.8    89.0 1.019*
                                                 39.6%                 372 TAQUARIL-345  2   -91.4    13.8    89.0 1.019*
                                                 38.2%                 372 TAQUARIL-345  3   -88.4    13.3    86.1 1.019*
                                                 33.5%                 374 TAQUARI-CAP1  1     0.0   -26.1    25.1 1.019*
                                                 33.5%                 375 TAQUARI-CAP2  1     0.0   -26.1    25.1 1.019*
                                                 42.1%                1534 ITABIRA--230  1    74.3    -3.1    71.6              03
                                                 35.4%                1534 ITABIRA--230  2    64.2    -4.6    62.0              03
                                                 54.0%                9006 BCOCAIS2-230  1   132.7    19.0   129.1              03
 374    1  0   1.066     0.0     0.0     0.0     0.0    27.3     0.0
TAQUARI-CAP1  -115.5     0.0     0.0     0.0     0.0     0.0     0.0
                                                 34.1%                 373 TAQUARIL-230  1     0.0    27.3    25.6
 375    1  0   1.067     0.0     0.0     0.0     0.0    27.3     0.0
TAQUARI-CAP2  -115.5     0.0     0.0     0.0     0.0     0.0     0.0
                                                 34.1%                 373 TAQUARIL-230  1     0.0    27.3    25.6
 376    1  0   1.050     0.0     0.0   273.1     0.0    45.0     0.0
TAQUARIL-138  -119.5     0.0     0.0   122.5     0.0     0.0     0.0
                                                 64.3%                 372 TAQUARIL-345  1  -121.8   -90.6   144.6 1.116*
                                                 64.3%                 372 TAQUARIL-345  2  -121.8   -90.6   144.6 1.116*
                                                 29.0%                 386 OPRETO2--138  1   -39.4    22.5    43.2
                                                 29.0%                 386 OPRETO2--138  2   -39.4    22.5    43.2
                                                 48.7%                1546 NLIMA----138  1    49.3    58.8    73.1              03
 377    1  0   1.050     0.0     0.0    55.8     0.0    11.9     0.0
SGONCALO-138  -112.5     0.0     0.0    18.5     0.0     0.0     0.0
                                                 65.6%                 379 SGONCAL1-FIC  1  -154.8  -136.8   196.8 1.000F
                                                 55.3%                1517 SGONCAL2-FIC  1  -139.0   104.7   165.8 1.000F
                                                 54.1%                1524 GAFANHOT-138  1    71.5    26.1    72.5              03
                                                 27.4%                1527 DIVINOP1-138  1    34.3    10.9    34.2              03
                                                 60.1%                1536 ITAUNA---138  1    78.5    -7.2    75.1              03
                                                 41.0%                1555 PARAMINA-138  1    53.7    -4.3    51.3              03
 378  500  0   1.103     0.0     0.0     0.0     0.0     0.0     0.0
SGONCALO-500  -108.8     0.0     0.0     0.0     0.0     0.0     0.0
                                                 66.4%                 379 SGONCAL1-FIC  1   154.8   155.9   199.2 0.988*
                                                 26.2%                 384 OPRETO2--500  1   558.5    65.7   509.7
                                                 50.2%                1517 SGONCAL2-FIC  1   139.0   -91.1   150.7 1.100S
```

```
                                                  45.2%                 4050 BDESPAC3-500  1  -852.3  -130.5   781.7
 379    1  0   1.049     0.0     0.0     0.0     0.0     0.0     0.0
SGONCAL1-FIC  -112.6     0.0     0.0     0.0     0.0     0.0     0.0
                                                   0.0%                  371 SGONCAL1-REA  1     0.0     0.0     0.0
                                                  65.6%                  377 SGONCALO-138  1   154.8   136.4   196.8
                                                  65.6%                  378 SGONCALO-500  1  -154.8  -136.4   196.8
CEPEL - CENTRO DE PESQUISAS DE ENERGIA ELETRICA - PROGRAMA DE ANALISE DE REDES - V08MAR05A                                PAG.  62

ANUAL 06/07 * SETEMBRO 2006 PESADA S/SE 19H N/NE 19H * ANAT0 - FSE - C13
RELATORIO COMPLETO DO SISTEMA * AREA  2 * *              CEMIG               *

X----------------- D A D O S  -  B A R R A ------------------------X------------ F L U X O S  -  C I R C U I T O S ------------X
 DA BARRA      TENSAO GERACAO INJ EQV  CARGA   ELO CC  SHUNT    MOTOR
 NUM. KV TIPO   MOD/     MW/     MW/     MW/     MW/   Mvar/     MW/
     NOME       ANG     Mvar    Mvar    Mvar    Mvar   EQUIV    Mvar  PARA BARRA                    FLUXOS
                                                FLUXO % SHUNT L         NUM.     NOME     NC     MW    Mvar  MVA/V_d   TAP  DEFAS TIE
X------------X-------X-------X-------X-------X-------X-------X-------X----X------------X--X-------X-------X-------X------X-----X---X

 380  345  0   1.044     0.0     0.0     0.0     0.0     0.0     0.0
TMARIAS--345  -109.8     0.0     0.0     0.0     0.0     0.0     0.0
                                                  19.4%                  350 NEVES----345  1    87.5   -41.1    92.6
                                                  28.7%                  381 TMARIAS--289  1   -79.4   101.1   123.1
                                                  31.6%                  391 SGOTARDO-345  1  -235.5   -23.0   226.7
                                                  31.6%                  398 VPALMA---345  1   227.4   -37.0   220.7
 381    1  0   1.032     0.0     0.0     0.0     0.0     0.0     0.0
TMARIAS--289  -109.3     0.0     0.0     0.0     0.0     0.0     0.0
                                                  60.1%                  304 T.MARIAS-5GR  1  -230.0    93.0   240.5 1.000F
                                                  28.7%                  380 TMARIAS--345  1    79.4   -99.3   123.2 0.999F
                                                  42.8%                  382 TMARIAS--138  1    66.1     3.9    64.2
                                                  42.8%                  382 TMARIAS--138  2    66.1     3.9    64.2
                                                  44.7%                  382 TMARIAS--138  3    18.4    -1.6    17.9
 382    1  0   1.042     0.0     0.0    94.1     0.0     3.9     0.0
TMARIAS--138  -112.0     0.0     0.0    22.7     0.0     0.0     0.0
                                                  42.3%                  381 TMARIAS--289  1   -66.1    -0.8    63.5 1.012F
                                                  42.3%                  381 TMARIAS--289  2   -66.1    -0.8    63.5 1.012F
                                                  44.5%                  381 TMARIAS--289  3   -18.4     2.5    17.8 1.005F
                                                  17.3%                  399 VPALMA---138  1    20.4    -9.6    21.7
                                                  17.6%                 1539 JPINHEIR-138  1     9.9     0.5     9.5                03
                                                  28.6%                 1571 BURITIZ--138  1    26.2   -10.7    27.2                03
 383    1  0   1.079     0.0     0.0     0.0     0.0     0.0     0.0
VALADAR2-FIC  -122.1     0.0     0.0     0.0     0.0     0.0     0.0
                                                  53.5%                  348 VALADARE-138  1    37.7    -5.7    35.3
                                                  42.8%                  348 VALADARE-138  2    30.1    -4.5    28.2
                                                  50.2%                  394 VALADARE-230  1   -35.3     5.3    33.1
                                                  46.1%                  394 VALADARE-230  2   -32.5     4.9    30.4
 384  500  0   1.075     0.0     0.0     0.0     0.0     0.0     0.0
OPRETO2--500  -113.5     0.0     0.0     0.0     0.0     0.0     0.0
                                                  28.2%                  378 SGONCALO-500  1  -555.4  -200.5   549.1
                                                  24.4%                  385 OPRETO2--345  1    95.8    42.4    97.5 1.025F
                                                  24.4%                  385 OPRETO2--345  2    95.8    42.4    97.5 1.025F
                                                  23.3%                  385 OPRETO2--345  3    91.6    40.6    93.2 1.025F
                                                  43.7%                  387 OPREFIC1-138  1   136.4    35.6   131.1 1.025F
                                                  43.8%                  388 OPREFIC2-138  1   135.6    39.5   131.3 1.025F
 385  345  0   1.040     0.0     0.0     0.0     0.0     0.0     0.0
OPRETO2--345  -114.6     0.0     0.0     0.0     0.0     0.0     0.0
                                                  41.3%                  149 VITORIA--345  1   318.8   -80.6   316.0                01
                                                   3.7%                  336 LAFAIETE-345  1    15.7    21.7    25.7
                                                  25.5%                  372 TAQUARIL-345  1   -51.2   177.9   177.9
                                                  25.0%                  384 OPRETO2--500  1   -95.8   -40.3    99.9
                                                  25.0%                  384 OPRETO2--500  2   -95.8   -40.3    99.9
```

```
                                                 23.9%                 384 OPRETO2--500  3   -91.6   -38.5    95.5
CEPEL - CENTRO DE PESQUISAS DE ENERGIA ELETRICA - PROGRAMA DE ANALISE DE REDES - V08MAR05A                                PAG.  63

ANUAL 06/07 * SETEMBRO 2006 PESADA S/SE 19H N/NE 19H * ANAT0 - FSE - C13
RELATORIO COMPLETO DO SISTEMA * AREA  2 * *              CEMIG              *

X----------------- D A D O S  -  B A R R A -------------------------X------------ F L U X O S  -  C I R C U I T O S ------------X
 DA BARRA      TENSAO GERACAO INJ EQV  CARGA   ELO CC  SHUNT    MOTOR
 NUM. KV TIPO   MOD/     MW/     MW/     MW/     MW/   Mvar/     MW/
     NOME       ANG     Mvar    Mvar    Mvar    Mvar   EQUIV    Mvar  PARA BARRA                    FLUXOS
                                                FLUXO % SHUNT L         NUM.     NOME     NC     MW    Mvar  MVA/V_d   TAP  DEFAS TIE
X------------X-------X-------X-------X-------X-------X-------X-------X----X------------X--X-------X-------X-------X------X-----X---X

  386    1  0   1.033     0.0     0.0   106.4     0.0     0.0     0.0
 OPRETO2--138  -116.9     0.0     0.0    40.2     0.0     0.0     0.0
                                                29.9%                 376 TAQUARIL-138  1    39.8   -23.1    44.5
                                                29.9%                 376 TAQUARIL-138  2    39.8   -23.1    44.5
                                                44.3%                 387 OPREFIC1-138  1  -136.4    15.3   132.9 1.000F
                                                44.9%                 388 OPREFIC2-138  1  -135.6   -31.0   134.6 1.000F
                                                23.8%                1566 SARAMENH-138  1    43.0    10.8    42.9              03
                                                23.6%                1566 SARAMENH-138  2    43.0    10.8    42.9              03
  387  138  0   1.034     0.0     0.0     0.0     0.0     0.0     0.0
 OPREFIC1-138  -117.2     0.0     0.0     0.0     0.0     0.0     0.0
                                                44.8%                 384 OPRETO2--500  1  -136.4   -26.4   134.4
                                                44.3%                 386 OPRETO2--138  1   136.4   -16.1   132.9
                                                41.1%                 389 OPRETO2-CEST  1     0.0    42.5    41.1
  388    1  0   1.032     0.0     0.0     0.0     0.0     0.0     0.0
 OPREFIC2-138  -117.2     0.0     0.0     0.0     0.0     0.0     0.0
                                                44.9%                 384 OPRETO2--500  1  -135.6   -30.2   134.6
                                                44.9%                 386 OPRETO2--138  1   135.6    30.2   134.6
  389    1  0   0.978     0.0     0.0     0.0     0.0     0.0     0.0
 OPRETO2-CEST  -117.2   -41.2     0.0     0.0     0.0     0.0     0.0
                                                42.1%                 387 OPREFIC1-138  1     0.0   -41.2    42.1 0.975F
  390  500  0   1.123     0.0     0.0     0.0     0.0     0.0     0.0
 SGOTARDO-500  -102.0     0.0     0.0     0.0     0.0     0.0     0.0
                                                39.3%                 320 EMBORCAC-500  1  -856.2    69.7   765.0
                                                27.5%                 393 SGOTARD2-FIC  1   121.8   -20.8   110.0 1.075F
                                                26.3%                1505 SGOTARD1-FIC  1   116.2   -19.8   105.0 1.075F
                                                31.8%                4050 BDESPAC3-500  1   618.2   -29.1   551.2
  391  345  0   1.049     0.0     0.0     0.0     0.0     0.0     0.0
 SGOTARDO-345  -103.3     0.0     0.0     0.0     0.0     0.0     0.0
                                                32.2%                 380 TMARIAS--345  1   238.0   -46.4   231.2
                                                29.6%                 393 SGOTARD2-FIC  1  -121.8    23.7   118.3 1.000F
                                                28.2%                1505 SGOTARD1-FIC  1  -116.2    22.6   112.9
  392    1  0   1.019     0.0     0.0    60.3     0.0     9.4     0.0
 UBERLAN1-138   -89.3     0.0     0.0    14.3     0.0     0.0     0.0
                                                12.9%                 307 AVATINGU-138  1    -7.1     8.2    10.6
                                                12.9%                 307 AVATINGU-138  2    -7.1     8.2    10.6
                                                13.3%                 321 EMBORCAC-138  1   -12.5   -11.4    16.6
                                                18.7%                1578 UBERABA1-138  1     5.4    -8.3     9.7              03
                                                 6.3%                1580 UBERLAN2-138  1     4.7     4.1     6.1              03
                                                27.2%                1582 UBERLAN6-138  1   -50.3     2.6    49.4              03
                                                19.8%                1584 UBERABA4-138  1     6.7    -8.1    10.3              03
CEPEL - CENTRO DE PESQUISAS DE ENERGIA ELETRICA - PROGRAMA DE ANALISE DE REDES - V08MAR05A                                PAG.  64

ANUAL 06/07 * SETEMBRO 2006 PESADA S/SE 19H N/NE 19H * ANAT0 - FSE - C13
RELATORIO COMPLETO DO SISTEMA * AREA  2 * *              CEMIG              *

X----------------- D A D O S  -  B A R R A -------------------------X------------ F L U X O S  -  C I R C U I T O S ------------X
 DA BARRA      TENSAO GERACAO INJ EQV  CARGA   ELO CC  SHUNT    MOTOR
```

```
 NUM. KV TIPO   MOD/     MW/     MW/     MW/     MW/   Mvar/     MW/
     NOME       ANG     Mvar    Mvar    Mvar    Mvar   EQUIV    Mvar  PARA BARRA                    FLUXOS
                                                FLUXO % SHUNT L         NUM.     NOME     NC     MW    Mvar  MVA/V_d   TAP  DEFAS TIE
X------------X-------X-------X-------X-------X-------X-------X-------X----X------------X--X-------X-------X-------X------X-----X---X

 393    1  0   1.050     0.0     0.0     0.0     0.0     0.0     0.0
SGOTARD2-FIC  -103.7     0.0     0.0     0.0     0.0     0.0     0.0
                                            29.6%                  390 SGOTARDO-500  1  -121.8    24.6   118.3
                                            29.6%                  391 SGOTARDO-345  1   121.8   -24.6   118.3
                                             0.0%                  397 SGOTARD-REA2  1     0.0     0.0     0.0
 394  230  0   1.047     0.0     0.0     0.0     0.0     0.0     0.0
VALADARE-230  -119.8     0.0     0.0     0.0     0.0     0.0     0.0
                                            42.3%                  319 CPENA----230  1  -146.6    20.4   141.4
                                             3.6%                  345 MESQUITA-230  2    -8.6    -7.6    11.0
                                            37.9%                  347 VALADAR1-FIC  1    26.0    -2.9    25.0 0.975F
                                            37.9%                  347 VALADAR1-FIC  2    26.0    -2.9    25.0 0.975F
                                            51.4%                  383 VALADAR2-FIC  1    35.3    -3.9    34.0 0.975F
                                            47.3%                  383 VALADAR2-FIC  2    32.5    -3.6    31.2 0.975F
                                             6.4%                 1593 VALAD5-2-230  1    -7.1   -15.0    15.8
                                            54.4%                 9005 GVALAD-T8-13  1    17.8     6.1    18.0              03
                                            76.1%                 9007 GVALAD-T9-13  1    24.6     9.3    25.1
 395    1  0   1.049     0.0     0.0     0.0     0.0     0.0     0.0
SGOTARD-REA1  -103.4     0.0     0.0     0.0     0.0     0.0     0.0
                                             0.0%                 1505 SGOTARD1-FIC  1     0.0     0.0     0.0 1.000F
 396    1  0   1.051     0.0     0.0     0.0     0.0     0.0     0.0
VGRANDE--345   -84.5     0.0     0.0     0.0     0.0     0.0     0.0
                                            23.8%                  134 LBARRETO-345  1   174.9    -9.1   166.7              01
                                            34.3%                  216 PCOLOMBI-345  1  -250.8    22.9   239.8              01
                                            65.6%                  305 V.GRANDE-4GR  1  -304.0   -60.7   295.1 1.025F
                                            58.4%                  326 JAGUARA--345  1   380.0    46.9   364.4
 397    1  0   1.050     0.0     0.0     0.0     0.0     0.0     0.0
SGOTARD-REA2  -103.7     0.0     0.0     0.0     0.0     0.0     0.0
                                             0.0%                  393 SGOTARD2-FIC  1     0.0     0.0     0.0 1.000F
 398  345  0   1.043     0.0     0.0     0.0     0.0     0.0     0.0
VPALMA---345  -113.3     0.0     0.0     0.0     0.0     0.0     0.0
                                             5.6%                  341 MCLAROS--345  1    39.6    10.2    39.2
                                            31.0%                  380 TMARIAS--345  1  -226.1    -0.7   216.8
                                            37.9%                 4013  V.PALMAFIC3  1    59.3    -3.0    56.9 1.003*        03
                                            40.3%                 4014  V.PALMAFIC4  1    63.0    -3.2    60.4 1.003*        03
                                            41.2%                 4015  V.PALMAFIC5  1    64.3    -3.3    61.7 1.003*        03
CEPEL - CENTRO DE PESQUISAS DE ENERGIA ELETRICA - PROGRAMA DE ANALISE DE REDES - V08MAR05A                              PAG.  65

ANUAL 06/07 * SETEMBRO 2006 PESADA S/SE 19H N/NE 19H * ANAT0 - FSE - C13
RELATORIO COMPLETO DO SISTEMA * AREA  2 * *             CEMIG              *

X----------------- D A D O S  -  B A R R A ------------------------X------------ F L U X O S  -  C I R C U I T O S ------------X
 DA BARRA      TENSAO GERACAO INJ EQV  CARGA   ELO CC  SHUNT    MOTOR
 NUM. KV TIPO   MOD/     MW/     MW/     MW/     MW/   Mvar/     MW/
     NOME       ANG     Mvar    Mvar    Mvar    Mvar   EQUIV    Mvar  PARA BARRA                    FLUXOS
                                                FLUXO % SHUNT L         NUM.     NOME     NC     MW    Mvar  MVA/V_d   TAP  DEFAS TIE
X------------X-------X-------X-------X-------X-------X-------X-------X----X------------X--X-------X-------X-------X------X-----X---X

 399    1  0   1.042     0.0     0.0    84.3     0.0    18.0     0.0
VPALMA---138  -114.9     0.0     0.0    26.6     0.0     0.0     0.0
                                            15.8%                  382 TMARIAS--138  1   -20.1     4.7    19.8
                                            17.1%                 1542 MCLAROS1-138  1     8.8    -9.2    12.3              03
                                            22.6%                 1558 PIRAPORA-138  1    33.8   -18.6    37.0              03
                                            61.2%                 1569 PIRAPOR2-138  1    79.7    -0.1    76.5              03
                                            38.0%                 4013  V.PALMAFIC3  1   -59.3     4.7    57.1 1.000F        03
                                            40.4%                 4014  V.PALMAFIC4  1   -63.0     5.0    60.6 1.000F        03
```

```
                                                 41.3%                  4015  V.PALMAFIC5  1   -64.3     5.1    61.9 1.000F        03
 1500    1  1   1.020   131.0     0.0     0.0     0.0     0.0     0.0
 IGARAPE--1GR  -111.1    46.4     0.0     0.0     0.0     0.0     0.0
                                                 87.3%                  1526 IGARAPE--138  1   131.0    46.4   136.2               03
 1501    1  1   0.980    78.0     0.0     0.0     0.0     0.0     0.0
 ITUT+CA-06MQ  -101.0    -0.1     0.0     0.0     0.0     0.0     0.0
                                                 72.4%                  1538 ITUTING1-138  1    78.0    -0.1    79.6               03
 1502    1  1   1.000    83.0     0.0     0.0     0.0     0.0     0.0
 SGRANDE-04MQ  -109.8   -26.5     0.0     0.0     0.0     0.0     0.0
                                                 69.7%                  1570 SGRANDE--161  1    83.0   -26.5    87.1               03
 1503    1  0   1.093     0.0     0.0     0.0     0.0     0.0     0.0
 ITAJU3-5-500   -94.1     0.0     0.0     0.0     0.0     0.0     0.0
                                                 33.6%                   102 POCOS----500  1  -611.5     7.9   559.7               01
                                                 21.9%                   104 C.PAULIS-500  1   398.4   -20.3   365.1               01
                                                 32.6%                  1504 ITAJU3-1-138  1   106.5     6.2    97.7 1.039*        03
                                                 32.6%                  1504 ITAJU3-1-138  2   106.5     6.2    97.7 1.039*        03
 1505    1  0   1.049     0.0     0.0     0.0     0.0     0.0     0.0
 SGOTARD1-FIC  -103.4     0.0     0.0     0.0     0.0     0.0     0.0
                                                 28.2%                   390 SGOTARDO-500  1  -116.2    22.9   112.9
                                                 28.2%                   391 SGOTARDO-345  1   116.2   -22.9   112.9
                                                  0.0%                   395 SGOTARD-REA1  1     0.0     0.0     0.0
 1507    1  0   1.025     0.0     0.0     0.0     0.0     0.0     0.0
 SGONCAL2-REA  -112.6     0.0     0.0     0.0     0.0     0.0     0.0
                                                  0.0%                  1517 SGONCAL2-FIC  1     0.0     0.0     0.0 0.975F
 1517    1  0   1.051     0.0     0.0     0.0     0.0     0.0     0.0
 SGONCAL2-FIC  -112.6     0.0     0.0     0.0     0.0     0.0     0.0
                                                 55.3%                   377 SGONCALO-138  1   139.0  -105.0   165.8
                                                 55.3%                   378 SGONCALO-500  1  -139.0   105.0   165.8
                                                  0.0%                  1507 SGONCAL2-REA  1     0.0     0.0     0.0
CEPEL - CENTRO DE PESQUISAS DE ENERGIA ELETRICA - PROGRAMA DE ANALISE DE REDES - V08MAR05A                                PAG.  66

ANUAL 06/07 * SETEMBRO 2006 PESADA S/SE 19H N/NE 19H * ANAT0 - FSE - C13
RELATORIO COMPLETO DO SISTEMA * AREA  2 * *              CEMIG              *

X----------------- D A D O S  -  B A R R A ------------------------X------------ F L U X O S  -  C I R C U I T O S ------------X
 DA BARRA      TENSAO GERACAO INJ EQV  CARGA   ELO CC  SHUNT    MOTOR
 NUM. KV TIPO   MOD/     MW/     MW/     MW/     MW/   Mvar/     MW/
     NOME       ANG     Mvar    Mvar    Mvar    Mvar   EQUIV    Mvar  PARA BARRA                    FLUXOS
                                                FLUXO % SHUNT L         NUM.     NOME     NC     MW    Mvar  MVA/V_d   TAP  DEFAS TIE
X------------X-------X-------X-------X-------X-------X-------X-------X----X------------X--X-------X-------X-------X------X-----X---X

 1525    1  0   1.044     0.0     0.0     0.0     0.0     0.0     0.0
 IGARAPAV-138   -87.4     0.0     0.0     0.0     0.0     0.0     0.0
                                                 76.8%                   343 IGARAPAV-4GR  1  -168.0    11.2   161.3
                                                 49.7%                  1579 UBERABA6-138  1   108.6    -8.5   104.3               03
                                                 27.1%                  1581 UBERABA5-138  1    59.4    -2.7    57.0               03
 1562    1  0   1.031     0.0     0.0     0.0     0.0     0.0     0.0
 BARREIR1-TER  -119.0     0.0     0.0     0.0     0.0     0.0     0.0
                                                  0.0%                  1574 BARREIR1-FIC  1     0.0     0.0     0.0 1.000F
 1573    1  0   1.031     0.0     0.0     0.0     0.0     0.0     0.0
 BARREIR3-TER  -119.0     0.0     0.0     0.0     0.0     0.0     0.0
                                                  0.0%                  1576 BARREIR3-FIC  3     0.0     0.0     0.0 1.000F
 1574    1  0   1.031     0.0     0.0     0.0     0.0     0.0     0.0
 BARREIR1-FIC  -119.0     0.0     0.0     0.0     0.0     0.0     0.0
                                                 78.3%                   313 BARREIRO-345  1  -117.3   -29.9   117.4
                                                 78.3%                   314 BARREIRO-138  1   117.3    29.9   117.4
                                                  0.0%                  1562 BARREIR1-TER  1     0.0     0.0     0.0
 1575    1  0   1.031     0.0     0.0     0.0     0.0     0.0     0.0
 BARREIR2-FIC  -119.0     0.0     0.0     0.0     0.0     0.0     0.0
                                                 78.3%                   313 BARREIRO-345  2  -117.3   -29.9   117.4
```

```
                                                  78.3%                  314 BARREIRO-138  2   117.3    29.9   117.4
 1576    1  0   1.031     0.0     0.0     0.0     0.0     0.0     0.0
 BARREIR3-FIC  -119.0     0.0     0.0     0.0     0.0     0.0     0.0
                                                  80.5%                  313 BARREIRO-345  3  -120.6   -30.7   120.7
                                                  80.5%                  314 BARREIRO-138  3   120.6    30.7   120.7
                                                   0.0%                 1573 BARREIR3-TER  3     0.0     0.0     0.0
 1589    1  0   1.047     0.0     0.0     0.0     0.0     0.0     0.0
 MESQUIT1-FIC  -119.6     0.0     0.0     0.0     0.0     0.0     0.0
                                                  34.5%                  344 MESQUITA-500  1  -139.5   -36.9   137.9
                                                  34.9%                  345 MESQUITA-230  1   139.5    43.5   139.6
                                                   4.7%                  346 MESQUITA-1CS  1     0.0    -6.6     6.3
 1590    1  0   1.047     0.0     0.0     0.0     0.0     0.0     0.0
 MESQUIT2-FIC  -119.6     0.0     0.0     0.0     0.0     0.0     0.0
                                                   0.0%                  329 MESQ.T2-13.4  1     0.0     0.0     0.0
                                                  34.9%                  344 MESQUITA-500  1  -141.2   -36.7   139.4
                                                  34.9%                  345 MESQUITA-230  1   141.2    36.7   139.4
 1591    1  0   1.046     0.0     0.0     0.0     0.0     0.0     0.0
 MESQUIT3-FIC  -119.6     0.0     0.0     0.0     0.0     0.0     0.0
                                                  38.4%                  324 MESQ.T3-13.4  1     0.0   -53.4    51.0
                                                  34.4%                  344 MESQUITA-500  1  -138.3   -40.3   137.7
                                                  39.9%                  345 MESQUITA-230  1   138.3    93.7   159.7
CEPEL - CENTRO DE PESQUISAS DE ENERGIA ELETRICA - PROGRAMA DE ANALISE DE REDES - V08MAR05A                          PAG.  67

ANUAL 06/07 * SETEMBRO 2006 PESADA S/SE 19H N/NE 19H * ANAT0 - FSE - C13
RELATORIO COMPLETO DO SISTEMA * AREA  2 * *             CEMIG                *

X----------------- D A D O S  -  B A R R A ------------------------X------------ F L U X O S  -  C I R C U I T O S ------------X
 DA BARRA      TENSAO GERACAO INJ EQV  CARGA   ELO CC  SHUNT    MOTOR
 NUM. KV TIPO   MOD/     MW/     MW/     MW/     MW/   Mvar/     MW/
     NOME       ANG     Mvar    Mvar    Mvar    Mvar   EQUIV    Mvar  PARA BARRA                    FLUXOS
                                                FLUXO % SHUNT L         NUM.     NOME     NC     MW    Mvar  MVA/V_d   TAP  DEFAS TIE
X------------X-------X-------X-------X-------X-------X-------X-------X----X------------X--X-------X-------X-------X------X-----X---X

 1593    1  0   1.049     0.0     0.0     0.0     0.0     6.6     0.0
 VALAD5-2-230  -119.8     0.0     0.0     0.0     0.0     0.0     0.0
                                                   3.5%                  345 MESQUITA-230  1    -7.1    -5.7     8.6
                                                   5.4%                  394 VALADARE-230  1     7.1    12.3    13.5
 4028    1  0   1.097     0.0     0.0     0.0     0.0     0.0     0.0
 VESPA2-5-500  -113.4     0.0     0.0     0.0     0.0     0.0     0.0
                                                  29.7%                  344 MESQUITA-500  1   421.1   -45.6   386.1
                                                  49.2%                  349 NEVES----500  1  -699.3   -46.0   638.8
                                                  44.5%                 4027 VESPA2-1-138  1   139.1    45.8   133.5 1.027*        03
                                                  44.5%                 4027 VESPA2-1-138  2   139.1    45.8   133.5 1.027*        03
 4050    1  0   1.116     0.0     0.0     0.0     0.0     0.0     0.0
 BDESPAC3-500  -105.5     0.0     0.0     0.0     0.0     0.0     0.0
                                                  45.8%                  325 JAGUARA--500  1  -883.9    -6.9   792.2
                                                  45.8%                  325 JAGUARA--500  2  -883.9    -6.9   792.2
                                                  39.6%                  349 NEVES----500  1   764.2    -5.6   685.0
                                                  39.5%                  349 NEVES----500  2   763.4    -5.6   684.2
                                                  44.6%                  378 SGONCALO-500  1   855.7    93.5   771.5
                                                  32.1%                  390 SGOTARDO-500  1  -615.5   -68.5   555.1
 4056    1  0   1.051     0.0     0.0     0.0     0.0     0.0     0.0
 ITUTING-FIC1  -104.9     0.0     0.0     0.0     0.0     0.0     0.0
                                                  52.0%                  138 ITUTINGA-345  1  -122.1   -15.0   117.0               01
                                                  52.0%                  323 ITUTING2-138  1   122.1    15.0   117.0
                                                   0.0%                 4057 ITUTING-TER1  1     0.0     0.0     0.0
 4057    1  0   1.051     0.0     0.0     0.0     0.0     0.0     0.0
 ITUTING-TER1  -104.9     0.0     0.0     0.0     0.0     0.0     0.0
                                                   0.0%                 4056 ITUTING-FIC1  1     0.0     0.0     0.0 1.000F
 4058    1  0   1.052     0.0     0.0     0.0     0.0     0.0     0.0
```

```
 ITUTING-FIC2  -104.8     0.0     0.0     0.0     0.0     0.0     0.0
                                                50.0%                 138 ITUTINGA-345  1  -117.4   -14.5   112.5              01
                                                50.0%                 323 ITUTING2-138  1   117.4    14.5   112.5
                                                 0.0%                4059 ITUTING-TER2  1     0.0     0.0     0.0
 4059    1  0   1.052     0.0     0.0     0.0     0.0     0.0     0.0
 ITUTING-TER2  -104.8     0.0     0.0     0.0     0.0     0.0     0.0
                                                 0.0%                4058 ITUTING-FIC2  1     0.0     0.0     0.0 1.000F
 4064   14  1   0.980   360.0     0.0     0.0     0.0     0.0     0.0
 IRAPE----3GR  -101.9   -28.5     0.0     0.0     0.0     0.0     0.0
                                                 3.7%                4065 IRAPE----345  1   360.0   -28.5   368.5
```



```
ANUAL 06/07 * SETEMBRO 2006 PESADA S/SE 19H N/NE 19H * ANAT0 - FSE - C13
RELATORIO COMPLETO DO SISTEMA * AREA  2 * *              CEMIG              *

X----------------- D A D O S  -  B A R R A -------------------------X------------ F L U X O S  -  C I R C U I T O S ------------X
 DA BARRA      TENSAO GERACAO INJ EQV  CARGA   ELO CC  SHUNT    MOTOR
 NUM. KV TIPO   MOD/     MW/     MW/     MW/     MW/   Mvar/     MW/
     NOME       ANG     Mvar    Mvar    Mvar    Mvar   EQUIV    Mvar  PARA BARRA                    FLUXOS
                                                FLUXO % SHUNT L         NUM.     NOME     NC     MW    Mvar  MVA/V_d   TAP  DEFAS TIE
X------------X-------X-------X-------X-------X-------X-------X-------X----X------------X--X-------X-------X-------X------X-----X---X

 4065   35  0   1.018     0.0     0.0     0.0     0.0     0.0     0.0
 IRAPE----345  -107.8     0.0     0.0     0.0     0.0     0.0     0.0
                                                23.6%                 341 MCLAROS--345  1   270.1   -57.0   271.1
                                                 3.6%                4064 IRAPE----3GR  1  -360.0    66.2   359.5 1.025F
                                                39.4%                4071 IRAPE----230  1    89.9    -9.2    88.7 1.000F        03
 9007    1  0   1.031     0.0     0.0    24.6     0.0     0.0     0.0
 GVALAD-T9-13  -126.3     0.0     0.0     6.2     0.0     0.0     0.0
                                                74.6%                 394 VALADARE-230  1   -24.6    -6.2    24.6 1.020*
 9009    1  0   1.031     0.0     0.0    20.8     0.0     1.3     0.0
 CPENA-----13  -119.7     0.0     0.0     5.3     0.0     0.0     0.0
                                                62.3%                9008 CPENA----FIC  1   -20.8    -4.0    20.6 0.976*        01


TOTAIS DA AREA  2


X--------X--------X--------X--------X--------X--------X--------X--------X
  GERACAO  INJ EQV   CARGA   ELO CC    SHUNT   EXPORT   IMPORT   PERDAS
    MW/      MW/      MW/      MW/     Mvar/     MW/      MW/      MW/
   Mvar     Mvar     Mvar     Mvar     EQUIV    Mvar     Mvar     Mvar
X--------X--------X--------X--------X--------X--------X--------X--------X

   4291.4      0.0   2438.6      0.0    733.5   6448.6   4795.3    199.5
   -448.3      0.0    822.5      0.0      0.0   1310.4    552.5  -1295.1
```



```
ANUAL 06/07 * SETEMBRO 2006 PESADA S/SE 19H N/NE 19H * ANAT0 - FSE - C13
RELATORIO COMPLETO DO SISTEMA * AREA  3 * *       CEMIG - DISTRIBUICAO       *

X----------------- D A D O S  -  B A R R A -------------------------X------------ F L U X O S  -  C I R C U I T O S ------------X
 DA BARRA      TENSAO GERACAO INJ EQV  CARGA   ELO CC  SHUNT    MOTOR
 NUM. KV TIPO   MOD/     MW/     MW/     MW/     MW/   Mvar/     MW/
     NOME       ANG     Mvar    Mvar    Mvar    Mvar   EQUIV    Mvar  PARA BARRA                    FLUXOS
                                                FLUXO % SHUNT L         NUM.     NOME     NC     MW    Mvar  MVA/V_d   TAP  DEFAS TIE
X------------X-------X-------X-------X-------X-------X-------X-------X----X------------X--X-------X-------X-------X------X-----X---X

 1504  138  0   1.050     0.0     0.0   119.9     0.0    41.0     0.0
```

```
 ITAJU3-1-138   -97.0     0.0     0.0    47.2     0.0     0.0     0.0
                                              33.8%                 1503 ITAJU3-5-500  1  -106.5    -0.9   101.5              02
                                              33.8%                 1503 ITAJU3-5-500  2  -106.5    -0.9   101.5              02
                                               0.1%                 3160 CAMBUI    69  1     8.7     2.5     8.6              35
                                              64.5%                 4007 SLOURE-1-138  1    84.5    -4.6    80.6
                                               1.8%                 4011 PARAISOP-138  1     0.0    -2.4     2.3
 1506    1  0   1.029     5.0     0.0    24.9     0.0     0.0     0.0
 ARAGUARI-138   -88.5     0.0     0.0    16.1     0.0     0.0     0.0
                                              20.3%                  321 EMBORCAC-138  1   -10.3   -18.0    20.1              02
                                               7.6%                 1587 UBERLAN7-138  1    -9.6     1.9     9.6
 1508    1  0   0.994     0.0     0.0   120.8     0.0     1.2     0.0
 ARAXA----138   -97.9     0.0     0.0    21.8     0.0     0.0     0.0
                                              58.1%                  330 JAGUARA--138  1   -54.4   -10.9    55.8              02
                                              42.3%                  330 JAGUARA--138  2   -51.7    -9.7    52.9              02
                                              25.2%                 1553 PATROCIN-138  1    23.7    -2.1    23.9
                                              71.7%                 1564 SACRAMEN-138  1   -38.4     2.0    38.7
 1509    1  0   0.987     0.0     0.0    19.1     0.0     2.9     0.0
 M.CARMELO138   -95.9     0.0     0.0     2.7     0.0     0.0     0.0
                                              55.2%                  321 EMBORCAC-138  1   -67.6    -1.1    68.5              02
                                              41.6%                 1519 COROMAND-138  1    51.0    -5.2    51.9
                                               5.7%                 1533 IRAMINAS-138  1    -2.5     6.6     7.1
 1510    1  0   1.021     0.0     0.0    67.3     0.0     0.0     0.0
 ARCOS----138  -106.3     0.0     0.0    25.5     0.0     0.0     0.0
                                              67.3%                  368 PIMENTA--138  1   -85.9    -0.2    84.1              02
                                              36.1%                 1528 IGUATAMA-138  1   -46.0    -1.0    45.1
                                              60.9%                 1556 PINDAIA--138  1    64.6   -24.3    67.6
 1511    1  1   1.050    60.0     0.0     0.0     0.0     0.0     0.0
 StaClara-3GR  -106.2   -14.8     0.0     0.0     0.0     0.0     0.0
                                              89.2%                 1595 SCLARA---138  1    60.0   -14.8    58.9
 1512    1  0   1.028     0.0     0.0    76.9     0.0     3.8     0.0
 BETIM2---138  -119.1     0.0     0.0    25.1     0.0     0.0     0.0
                                               3.1%                 1515 UTIBIRIT-138  1    -5.1     3.8     6.2              41
                                              12.7%                 1523 FMBETIM3-138  1    13.0   -19.5    22.8
                                              51.9%                 1526 IGARAPE--138  1   -80.0    -2.8    77.9
                                               3.6%                 1540 JATOBA---138  1    -4.8    -2.8     5.5
 1514    1  0   1.029     0.0     0.0     1.0     0.0     0.0     0.0
 BOZEL----138  -110.0     0.0     0.0     0.2     0.0     0.0     0.0
                                              69.7%                  323 ITUTING2-138  1   -87.9    17.1    87.1              02
                                              68.9%                 1572 SJDELREY-138  1    86.9   -17.3    86.2
CEPEL - CENTRO DE PESQUISAS DE ENERGIA ELETRICA - PROGRAMA DE ANALISE DE REDES - V08MAR05A                                PAG.  70

ANUAL 06/07 * SETEMBRO 2006 PESADA S/SE 19H N/NE 19H * ANAT0 - FSE - C13
RELATORIO COMPLETO DO SISTEMA * AREA  3 * *       CEMIG - DISTRIBUICAO       *

X----------------- D A D O S  -  B A R R A ------------------------X------------ F L U X O S  -  C I R C U I T O S ------------X
 DA BARRA      TENSAO GERACAO INJ EQV  CARGA   ELO CC  SHUNT    MOTOR
 NUM. KV TIPO   MOD/     MW/     MW/     MW/     MW/   Mvar/     MW/
     NOME       ANG     Mvar    Mvar    Mvar    Mvar   EQUIV    Mvar  PARA BARRA                    FLUXOS
                                                FLUXO % SHUNT L         NUM.     NOME     NC     MW    Mvar  MVA/V_d   TAP  DEFAS TIE
X------------X-------X-------X-------X-------X-------X-------X-------X----X------------X--X-------X-------X-------X------X-----X---X

 1516    1  0   1.037     0.0     0.0    20.8     0.0     0.0     0.0
 CARANDAI-138  -116.0     0.0     0.0     7.7     0.0     0.0     0.0
                                              28.6%                  309 BARBACEN-138  1   -35.7    10.2    35.8              02
                                              18.0%                  337 LAFAIETE-138  1    14.9   -17.9    22.5              02
 1518    1  0   1.021     0.0     0.0    57.8     0.0     0.0     0.0
 CONGONHA-138  -119.2     0.0     0.0    18.5     0.0     0.0     0.0
                                              63.7%                 1544 MURTINHO-138  1   -62.1    -6.7    61.2
                                              12.8%                 1546 NLIMA----138  1     4.3   -11.8    12.3
 1519    1  0   0.967     0.0     0.0    11.4     0.0     2.8     0.0
```

```
 COROMAND-138  -100.4     0.0     0.0     3.8     0.0     0.0     0.0
                                                59.2%                 321 EMBORCAC-138  1   -71.4     4.4    74.0                02
                                                41.3%                1509 M.CARMELO138  1   -49.5     5.7    51.6
                                                50.5%                1552 PMINAS---138  1    60.2     9.9    63.1
                                                44.4%                1588 VAZANTE--138  1    49.3   -21.0    55.5
 1520  230  0   1.019     0.0     0.0    93.6     0.0     0.0     0.0
 CSBM-----230  -119.1     0.0     0.0    19.7     0.0     0.0     0.0
                                                16.9%                1534 ITABIRA--230  1   -34.6   -25.2    42.0
                                                24.3%                9006 BCOCAIS2-230  1   -59.0     5.5    58.1
 1521    1  0   1.033     0.0     0.0    68.3     0.0    19.9     0.0
 DIVINOP2-138  -113.1     0.0     0.0    17.6     0.0     0.0     0.0
                                                36.6%                1524 GAFANHOT-138  1   -23.6   -27.6    35.1
                                                46.8%                1556 PINDAIA--138  1   -44.7    29.8    52.0
 1522    1  0   1.039     0.0     0.0     0.1     0.0     0.0     0.0
 ESMAN----138  -114.3     0.0     0.0     0.0     0.0     0.0     0.0
                                                 2.1%                 309 BARBACEN-138  1    -2.7     0.0     2.6                02
                                                 2.0%                1568 SDUMONT--138  1     2.6     0.0     2.5
 1523    1  0   1.029     0.0     0.0   116.1     0.0     0.0     0.0
 FMBETIM3-138  -119.2     0.0     0.0    23.7     0.0     0.0     0.0
                                                59.6%                 353 NEVES----138  1  -103.1   -43.0   108.5                02
                                                12.6%                1512 BETIM2---138  1   -13.0    19.3    22.7
 1524    1  0   1.043    18.0     0.0    54.4     0.0    22.2     0.0
 GAFANHOT-138  -112.9     0.0     0.0    18.5     0.0     0.0     0.0
                                                54.2%                 377 SGONCALO-138  1   -71.3   -25.7    72.6                02
                                                36.0%                1521 DIVINOP2-138  1    23.8    27.2    34.6
                                                 8.7%                1527 DIVINOP1-138  1    11.1     2.3    10.9
CEPEL - CENTRO DE PESQUISAS DE ENERGIA ELETRICA - PROGRAMA DE ANALISE DE REDES - V08MAR05A                              PAG.  71

ANUAL 06/07 * SETEMBRO 2006 PESADA S/SE 19H N/NE 19H * ANAT0 - FSE - C13
RELATORIO COMPLETO DO SISTEMA * AREA  3 * *       CEMIG - DISTRIBUICAO       *

X----------------- D A D O S  -  B A R R A -------------------------X------------ F L U X O S  -  C I R C U I T O S -------------X
 DA BARRA      TENSAO GERACAO INJ EQV  CARGA   ELO CC  SHUNT    MOTOR
 NUM. KV TIPO   MOD/     MW/     MW/     MW/     MW/   Mvar/     MW/
     NOME       ANG     Mvar    Mvar    Mvar    Mvar   EQUIV    Mvar  PARA BARRA                    FLUXOS
                                                FLUXO % SHUNT L         NUM.     NOME     NC     MW    Mvar  MVA/V_d   TAP  DEFAS TIE
X------------X-------X-------X-------X-------X-------X-------X-------X----X------------X--X-------X-------X-------X------X-----X---X

 1526    1  0   1.040     0.0     0.0    36.0     0.0     0.0     0.0
 IGARAPE--138  -116.6     0.0     0.0    12.1     0.0     0.0     0.0
                                                24.5%                 314 BARREIRO-138  1    36.3    -3.5    35.1                02
                                                83.2%                1500 IGARAPE--1GR  1  -131.0   -32.4   129.8 1.050F        02
                                                51.9%                1512 BETIM2---138  1    80.8     4.6    77.8
                                                11.3%                1536 ITAUNA---138  1   -11.0     9.6    14.1
                                                11.3%                1536 ITAUNA---138  2   -11.0     9.6    14.1
 1527    1  0   1.041     0.0     0.0    45.2     0.0     0.0     0.0
 DIVINOP1-138  -113.1     0.0     0.0    14.6     0.0     0.0     0.0
                                                27.6%                 377 SGONCALO-138  1   -34.1   -11.4    34.6                02
                                                 8.9%                1524 GAFANHOT-138  1   -11.1    -3.2    11.1
 1528    1  0   1.032     0.0     0.0    21.5     0.0     3.8     0.0
 IGUATAMA-138  -104.8     0.0     0.0     5.0     0.0     0.0     0.0
                                                52.7%                 368 PIMENTA--138  1   -68.0    -1.8    65.9                02
                                                36.0%                1510 ARCOS----138  1    46.5     0.7    45.1
 1529  230  0   1.033     0.0     0.0     0.0     0.0     0.0     0.0
 GUILMAN--230  -118.1     0.0     0.0     0.0     0.0     0.0     0.0
                                                64.0%                 306 GUILMAN--3GR  1  -105.0    13.2   102.5 1.025F        02
                                                20.6%                1530 IPATINGT-230  1    52.2   -36.7    61.7
                                                18.5%                1545 NOVAERA--230  1    52.8    23.5    56.0                41
 1530  230  0   1.044     0.0     0.0     0.0     0.0     0.0     0.0
 IPATINGT-230  -119.6     0.0     0.0     0.0     0.0     0.0     0.0
```

```
                                                  54.7%                 345 MESQUITA-230  1  -149.4   -87.6   165.9                02
                                                  54.7%                 345 MESQUITA-230  2  -149.4   -87.6   165.9                02
                                                  19.7%                1529 GUILMAN--230  1   -51.8    32.9    58.8
                                                  24.4%                1531 IPATINGT-161  1    -1.0    38.2    36.6
                                                  54.1%                1535 IPATINGT-138  1   127.2    -3.8   121.8 1.006*
                                                  31.8%                1592 PESTRELA-230  1   -71.4    34.5    76.0                41
                                                  76.5%                9010 IPATING-FIC1  1    24.7     9.2    25.2 0.975F         41
                                                  65.0%                9030 TIMOTEO--230  1    99.0    43.0   103.4
                                                  54.8%                9040 USIMINA1-230  1   172.2    21.3   166.2
 1531    1  0   1.041     0.0     0.0     0.0     0.0     0.0     0.0
 IPATINGT-161  -119.6     0.0     0.0     0.0     0.0     0.0     0.0
                                                  24.2%                1530 IPATINGT-230  1     1.0   -37.7    36.2 1.010*
                                                  43.2%                1532 IPATINGD-161  1    -1.0    37.7    36.2
                                                   0.0%                1535 IPATINGT-138  1     0.0     0.0     0.0
 1532    1  0   1.037     0.0     0.0    69.8     0.0    18.1     0.0
 IPATINGD-161  -119.5     0.0     0.0    19.2     0.0     0.0     0.0
                                                  43.6%                1531 IPATINGT-161  1     1.1   -38.0    36.7
                                                  91.7%                1570 SGRANDE--161  1   -70.9    36.9    77.0
CEPEL - CENTRO DE PESQUISAS DE ENERGIA ELETRICA - PROGRAMA DE ANALISE DE REDES - V08MAR05A                                PAG.  72

ANUAL 06/07 * SETEMBRO 2006 PESADA S/SE 19H N/NE 19H * ANAT0 - FSE - C13
RELATORIO COMPLETO DO SISTEMA * AREA  3 * *       CEMIG - DISTRIBUICAO       *

X----------------- D A D O S  -  B A R R A -------------------------X------------ F L U X O S  -  C I R C U I T O S ------------X
 DA BARRA      TENSAO GERACAO INJ EQV  CARGA   ELO CC  SHUNT    MOTOR
 NUM. KV TIPO   MOD/     MW/     MW/     MW/     MW/   Mvar/     MW/
     NOME       ANG     Mvar    Mvar    Mvar    Mvar   EQUIV    Mvar  PARA BARRA                   FLUXOS
                                                FLUXO % SHUNT L         NUM.     NOME     NC     MW    Mvar  MVA/V_d   TAP  DEFAS TIE
X------------X-------X-------X-------X-------X-------X-------X-------X----X------------X--X-------X-------X-------X------X-----X---X

 1533    1  0   0.982     0.0     0.0     8.1     0.0     0.0     0.0
 IRAMINAS-138   -95.7     0.0     0.0     3.5     0.0     0.0     0.0
                                                   7.1%                1509 M.CARMELO138  1     2.5    -8.2     8.8
                                                  56.5%                1549 N.PONTE--138  1   -68.4    11.3    70.6
                                                  47.7%                1553 PATROCIN-138  1    57.7    -6.6    59.2
 1534  230  0   1.026     0.0     0.0    67.9     0.0     0.0     0.0
 ITABIRA--230  -118.7     0.0     0.0    19.8     0.0     0.0     0.0
                                                  42.4%                 373 TAQUARIL-230  1   -73.5    -7.5    72.0                02
                                                  35.8%                 373 TAQUARIL-230  2   -63.6    -9.1    62.6                02
                                                  15.9%                1520 CSBM-----230  1    34.7    20.9    39.5
                                                  47.3%                1537 ITABIRA---69  1    32.0    -1.8    31.2
                                                   3.4%                1545 NOVAERA--230  1    -6.8    -8.1    10.3                41
                                                  10.6%                1592 PESTRELA-230  1   -22.0   -13.9    25.3                41
                                                  92.4%                9020 ITABIRA2--13  1    31.3    -0.4    30.5
 1535    1  0   1.041     1.0     0.0    20.6     0.0    10.4     0.0
 IPATINGT-138  -122.3     0.0     0.0     4.2     0.0     0.0     0.0
                                                  54.5%                1530 IPATINGT-230  1  -127.2     9.8   122.6
                                                   0.0%                1531 IPATINGT-161  1     0.0     0.0     0.0 1.000F
                                                  57.5%                4061 CARATING-138  1    57.4    -0.7    55.2
                                                  38.6%                4062 INHAPIM--138  1    50.2    -2.9    48.3
 1536    1  0   1.034     0.0     0.0    63.3     0.0     0.0     0.0
 ITAUNA---138  -115.8     0.0     0.0    14.2     0.0     0.0     0.0
                                                  59.9%                 377 SGONCALO-138  1   -76.8     9.5    74.9                02
                                                  12.6%                1526 IGARAPE--138  1    11.1   -12.0    15.8
                                                  12.6%                1526 IGARAPE--138  2    11.1   -12.0    15.8
                                                   9.0%                1555 PARAMINA-138  1    -8.7     0.2     8.4
 1537    1  0   1.040     0.0     0.0    32.0     0.0    11.7     0.0
 ITABIRA---69  -122.4     0.0     0.0     7.8     0.0     0.0     0.0
                                                  47.0%                1534 ITABIRA--230  1   -32.0     3.9    31.0 1.007*
 1538    1  0   1.033     0.0     0.0     5.3     0.0     0.0     0.0
```

```
 ITUTING1-138  -106.0     0.0     0.0     1.9     0.0     0.0     0.0
                                                68.9%                 1501 ITUT+CA-06MQ  1   -78.0     6.9    75.8 1.050F        02
                                                10.8%                 1541 LAVRAS2--138  1    10.4     9.3    13.5
                                                52.3%                 1572 SJDELREY-138  1    62.3   -18.1    62.8
 1539    1  0   1.002     0.0     0.0     9.7     0.0     3.0     0.0
 JPINHEIR-138  -113.5     0.0     0.0     2.1     0.0     0.0     0.0
                                                23.1%                  382 TMARIAS--138  1    -9.6    -8.0    12.5               02
                                                12.4%                 1550 PARACAT2-138  1    -0.1     9.0     8.9
CEPEL - CENTRO DE PESQUISAS DE ENERGIA ELETRICA - PROGRAMA DE ANALISE DE REDES - V08MAR05A                                PAG.  73

ANUAL 06/07 * SETEMBRO 2006 PESADA S/SE 19H N/NE 19H * ANAT0 - FSE - C13
RELATORIO COMPLETO DO SISTEMA * AREA  3 * *       CEMIG - DISTRIBUICAO       *

X----------------- D A D O S  -  B A R R A ------------------------X------------ F L U X O S  -  C I R C U I T O S ------------X
 DA BARRA      TENSAO GERACAO INJ EQV  CARGA   ELO CC  SHUNT    MOTOR
 NUM. KV TIPO   MOD/     MW/     MW/     MW/     MW/   Mvar/     MW/
     NOME       ANG     Mvar    Mvar    Mvar    Mvar   EQUIV    Mvar  PARA BARRA                    FLUXOS
                                                FLUXO % SHUNT L         NUM.     NOME     NC     MW    Mvar  MVA/V_d   TAP  DEFAS TIE
X------------X-------X-------X-------X-------X-------X-------X-------X----X------------X--X-------X-------X-------X------X-----X---X

 1540    1  0   1.030     0.0     0.0    63.9     0.0     3.2     0.0
 JATOBA---138  -119.0     0.0     0.0    23.2     0.0     0.0     0.0
                                                46.6%                  314 BARREIRO-138  1   -68.7   -21.2    69.9               02
                                                 3.2%                 1512 BETIM2---138  1     4.8     1.2     4.8
 1541    1  0   1.020     0.0     0.0    57.4     0.0     5.6     0.0
 LAVRAS2--138  -106.3     0.0     0.0    21.6     0.0     0.0     0.0
                                                38.1%                  323 ITUTING2-138  1   -58.5   -20.7    60.9               02
                                                12.2%                 1538 ITUTING1-138  1   -10.3   -11.5    15.2
                                                52.4%                 1543 UHFUNIL--138  1   -49.3     9.6    49.2
                                                54.6%                 1543 UHFUNIL--138  2   -69.5     2.6    68.2
                                                59.8%                 4001 NEPOMU-1-138  1    57.9    -1.7    56.8
                                                57.0%                 4003 VARGI1-1-138  1    72.4     5.7    71.2
 1542    1  0   1.038     1.0     0.0   120.7     0.0     3.9     0.0
 MCLAROS1-138  -117.5     0.0     0.0    39.1     0.0     0.0     0.0
                                                87.6%                  342 MCLAROS2-138  1  -109.4   -30.7   109.5               02
                                                11.5%                  399 VPALMA---138  1    -8.6     0.3     8.3               02
                                                 5.2%                 1558 PIRAPORA-138  1    -1.7    -4.8     4.9
 1543    1  0   1.030     0.0     0.0    23.7     0.0     3.2     0.0
 UHFUNIL--138  -104.7     0.0     0.0    10.1     0.0     0.0     0.0
                                                52.6%                 1541 LAVRAS2--138  1    50.1    -9.6    49.5
                                                54.6%                 1541 LAVRAS2--138  2    70.2    -1.7    68.2
                                                73.6%                 4044 FUNILGRD-3GR  1  -144.0     4.4   139.9 1.000F
 1544    1  0   1.035     0.0     0.0    18.3     0.0     0.0     0.0
 MURTINHO-138  -117.8     0.0     0.0     6.0     0.0     0.0     0.0
                                                82.7%                  337 LAFAIETE-138  1   -81.1   -13.3    79.4               02
                                                63.6%                 1518 CONGONHA-138  1    62.8     7.3    61.1
 1546    1  0   1.033    15.0     0.0   137.8     0.0     6.4     0.0
 NLIMA----138  -119.8     0.0     0.0    50.5     0.0     0.0     0.0
                                                44.2%                  314 BARREIRO-138  1   -69.7     5.4    67.7               02
                                                49.0%                  376 TAQUARIL-138  1   -48.8   -58.1    73.5               02
                                                 9.7%                 1518 CONGONHA-138  1    -4.3     8.6     9.3
 1548    1  0   1.018     0.0     0.0    24.7     0.0     0.0     0.0
 OPRETO---138  -118.4     0.0     0.0     8.1     0.0     0.0     0.0
                                                26.4%                  337 LAFAIETE-138  1   -30.7   -13.4    32.9               02
                                                34.6%                 1566 SARAMENH-138  1    42.1   -13.2    43.3
                                                34.6%                 4020 PNOVA----138  1   -36.0    18.5    39.8
 1549    1  0   0.996     0.0     0.0     8.5     0.0     0.0     0.0
 N.PONTE--138   -92.2     0.0     0.0     4.4     0.0     0.0     0.0
                                                63.1%                  340 MIRANDA--138  1   -78.5     4.8    78.9               02
                                                56.7%                 1533 IRAMINAS-138  1    70.0    -9.2    70.9
```

ANUAL 06/07 * SETEMBRO 2006 PESADA S/SE 19H N/NE 19H * ANAT0 - FSE - C13
RELATORIO COMPLETO DO SISTEMA * AREA 3 * * CEMIG - DISTRIBUICAO *

```
X----------------- D A D O S  -  B A R R A ------------------------X------------ F L U X O S  -  C I R C U I T O S ------------X
 DA BARRA      TENSAO GERACAO INJ EQV  CARGA   ELO CC  SHUNT    MOTOR
 NUM. KV TIPO   MOD/     MW/     MW/     MW/     MW/   Mvar/     MW/
     NOME       ANG     Mvar    Mvar    Mvar    Mvar   EQUIV    Mvar  PARA BARRA                    FLUXOS
                                                FLUXO % SHUNT L         NUM.     NOME     NC     MW    Mvar  MVA/V_d   TAP  DEFAS TIE
X------------X-------X-------X-------X-------X-------X-------X-------X----X------------X--X-------X-------X-------X------X-----X---X

 1550    1  0   0.983     0.0     0.0    11.8     0.0     2.3     0.0
 PARACAT2-138  -112.8     0.0     0.0     3.1     0.0     0.0     0.0
                                            17.8%                    1539 JPINHEIR-138  1     0.2   -12.6    12.8
                                            35.7%                    1551 PARACAT1-138  1   -12.0    11.8    17.1
 1551    1  0   0.978     0.0     0.0    49.9     0.0    20.5     0.0
 PARACAT1-138  -111.8     0.0     0.0    11.3     0.0     0.0     0.0
                                            38.6%                    1550 PARACAT2-138  1    12.2   -13.4    18.5
                                            23.4%                    1588 VAZANTE--138  1   -26.7    10.4    29.3
                                            30.6%                    4037 UNAI2----138  1   -35.4    12.2    38.3
 1552    1  0   0.898     0.0     0.0   101.5     0.0    33.5     0.0
 PMINAS---138  -108.3     0.0     0.0    34.9     0.0     0.0     0.0
                                            51.0%                    1519 COROMAND-138  1   -57.0    -5.6    63.7
                                            50.3%                    1553 PATROCIN-138  1   -44.5     4.2    49.8
 1553    1  0   0.959     0.0     0.0    30.5     0.0    11.0     0.0
 PATROCIN-138  -101.3     0.0     0.0     6.2     0.0     0.0     0.0
                                            25.1%                    1508 ARAXA----138  1   -22.8    -1.0    23.8
                                            47.3%                    1533 IRAMINAS-138  1   -55.7     8.4    58.7
                                            50.6%                    1552 PMINAS---138  1    48.0    -2.5    50.1
 1554    1  0   1.040     9.0     0.0     2.9     0.0     0.0     0.0
 PIAU-----138  -114.1     0.0     0.0     1.0     0.0     0.0     0.0
                                             0.4%                     332 JUIZFORA-138  1    -0.4    -0.1     0.4              02
                                             6.8%                    1568 SDUMONT--138  1     6.5    -0.9     6.3
 1555    1  0   1.037     0.0     0.0    44.1     0.0    10.5     0.0
 PARAMINA-138  -115.5     0.0     0.0     8.1     0.0     0.0     0.0
                                            40.9%                     377 SGONCALO-138  1   -52.8     4.2    51.1              02
                                             9.1%                    1536 ITAUNA---138  1     8.7    -1.8     8.6
 1556    1  0   1.023     0.0     0.0    17.3     0.0     3.1     0.0
 PINDAIA--138  -110.4     0.0     0.0     4.3     0.0     0.0     0.0
                                            60.1%                    1510 ARCOS----138  1   -62.9    26.4    66.7
                                            46.9%                    1521 DIVINOP2-138  1    45.6   -27.6    52.1
 1557    1  0   1.066     2.0     0.0    45.7     0.0    53.1     0.0
 TOTONI---138  -122.1     0.0     0.0    16.3     0.0     0.0     0.0
                                             0.6%                     348 VALADARE-138  1     0.4    -0.4     0.5              02
                                             0.1%                     348 VALADARE-138  2     0.0     0.1     0.1              02
                                            54.5%                    1561 NANUQUE--138  1   -40.3    13.4    39.8
                                            24.0%                    4080 PPARAISO-138  1    -3.9    23.8    22.6
```



ANUAL 06/07 * SETEMBRO 2006 PESADA S/SE 19H N/NE 19H * ANAT0 - FSE - C13
RELATORIO COMPLETO DO SISTEMA * AREA 3 * * CEMIG - DISTRIBUICAO *

X----------------- D A D O S  -  B A R R A ------------------------X------------ F L U X O S  -  C I R C U I T O S ------------X
 DA BARRA      TENSAO GERACAO INJ EQV  CARGA   ELO CC  SHUNT    MOTOR
 NUM. KV TIPO   MOD/     MW/     MW/     MW/     MW/   Mvar/     MW/
     NOME       ANG     Mvar    Mvar    Mvar    Mvar   EQUIV    Mvar  PARA BARRA                    FLUXOS
                                                FLUXO % SHUNT L         NUM.     NOME     NC     MW    Mvar  MVA/V_d   TAP  DEFAS TIE
X------------X-------X-------X-------X-------X-------X-------X-------X----X------------X--X-------X-------X-------X------X-----X---X

```
 1558    1  0   1.040     0.0     0.0    39.5     0.0    35.5     0.0
 PIRAPORA-138  -117.2     0.0     0.0    13.6     0.0     0.0     0.0
                                                21.9%                 399 VPALMA---138  1   -33.0    17.5    35.9              02
                                                 5.4%                1542 MCLAROS1-138  1     1.7    -5.1     5.1
                                                 2.6%                1569 PIRAPOR2-138  1     2.3     2.4     3.2
                                                12.8%                1571 BURITIZ--138  1   -10.5     7.1    12.2
 1559    1  1   1.030   112.0     0.0     0.0     0.0     0.0     0.0
 CANDONGA-3GR  -104.5     9.0     0.0     0.0     0.0     0.0     0.0
                                                72.7%                1560 CANDONGA-138  1   112.0     9.0   109.1 1.000F
 1560    1  0   1.027     0.0     0.0     0.0     0.0     0.0     0.0
 CANDONGA-138  -108.9     0.0     0.0     0.0     0.0     0.0     0.0
                                                72.7%                1559 CANDONGA-3GR  1  -112.0    -0.3   109.1
                                                57.4%                4020 PNOVA----138  1   112.0     0.3   109.1
 1561    1  0   1.100     0.0     0.0    15.1     0.0     7.3     0.0
 NANUQUE--138  -112.8     0.0     0.0     4.5     0.0     0.0     0.0
                                                59.0%                1557 TOTONI---138  1    44.1   -17.5    43.1
                                                77.9%                1595 SCLARA---138  1   -59.2    20.2    56.9
 1563    1  0   1.039     0.0     0.0     7.4     0.0     0.0     0.0
 J.FORA7--138  -114.2     0.0     0.0     2.4     0.0     0.0     0.0
                                                 7.8%                 332 JUIZFORA-138  1   -10.2    -0.4     9.8              02
                                                 2.6%                1568 SDUMONT--138  1     2.8    -2.0     3.3
                                                 0.0%                4182 JF-CFCL--138  1     0.0     0.0     0.0              41
 1564    1  0   1.039     0.0     0.0     7.9     0.0     0.0     0.0
 SACRAMEN-138   -93.3     0.0     0.0     4.3     0.0     0.0     0.0
                                                15.0%                 330 JAGUARA--138  1   -21.9   -18.0    27.3              02
                                                72.1%                1508 ARAXA----138  1    40.4    -3.1    39.0
                                                24.3%                1578 UBERABA1-138  1   -26.4    16.8    30.1
 1565    1  0   1.030     0.0     0.0    58.1     0.0     0.0     0.0
 CINCO--1-138  -118.8     0.0     0.0    21.1     0.0     0.0     0.0
                                                56.5%                 353 NEVES----138  1   -83.2   -26.3    84.8              02
                                                13.7%                4036 BETIM4---138  1    25.1     5.2    24.9
 1566    1  0   1.018     0.0     0.0   127.4     0.0     0.0     0.0
 SARAMENH-138  -118.6     0.0     0.0     9.3     0.0     0.0     0.0
                                                24.1%                 386 OPRETO2--138  1   -42.7   -11.2    43.4              02
                                                23.8%                 386 OPRETO2--138  2   -42.7   -11.2    43.4              02
                                                34.6%                1548 OPRETO---138  1   -42.0    13.2    43.2
 1567    1  0   1.028     0.0     0.0    38.7     0.0     0.0     0.0
 REGAP--1-138  -119.1     0.0     0.0    12.7     0.0     0.0     0.0
                                                25.4%                 314 BARREIRO-138  1   -38.1    -8.9    38.0              02
                                                 1.9%                1515 UTIBIRIT-138  1    -0.6    -3.8     3.8              41
CEPEL - CENTRO DE PESQUISAS DE ENERGIA ELETRICA - PROGRAMA DE ANALISE DE REDES - V08MAR05A                              PAG.  76

ANUAL 06/07 * SETEMBRO 2006 PESADA S/SE 19H N/NE 19H * ANAT0 - FSE - C13
RELATORIO COMPLETO DO SISTEMA * AREA  3 * *       CEMIG - DISTRIBUICAO       *

X----------------- D A D O S  -  B A R R A ------------------------X------------ F L U X O S  -  C I R C U I T O S ------------X
 DA BARRA      TENSAO GERACAO INJ EQV  CARGA   ELO CC  SHUNT    MOTOR
 NUM. KV TIPO   MOD/     MW/     MW/     MW/     MW/   Mvar/     MW/
     NOME       ANG     Mvar    Mvar    Mvar    Mvar   EQUIV    Mvar  PARA BARRA                    FLUXOS
                                                FLUXO % SHUNT L         NUM.     NOME     NC     MW    Mvar  MVA/V_d   TAP  DEFAS TIE
X------------X-------X-------X-------X-------X-------X-------X-------X----X------------X--X-------X-------X-------X------X-----X---X

 1568    1  0   1.039     0.0     0.0    14.5     0.0     3.2     0.0
 SDUMONT--138  -114.3     0.0     0.0     4.8     0.0     0.0     0.0
                                                 2.1%                 309 BARBACEN-138  1    -2.6    -0.6     2.6              02
                                                 2.0%                1522 ESMAN----138  1    -2.6    -0.6     2.5
                                                 6.8%                1554 PIAU-----138  1    -6.5    -0.5     6.3
                                                 2.1%                1563 J.FORA7--138  1    -2.8     0.0     2.7
 1569    1  0   1.040     0.0     0.0    81.8     0.0     0.0     0.0
 PIRAPOR2-138  -117.2     0.0     0.0     0.7     0.0     0.0     0.0
```

```
                                                 61.2%                 399 VPALMA---138  1   -79.5     2.1    76.5                02
                                                  2.8%                1558 PIRAPORA-138  1    -2.3    -2.8     3.5
 1570    1  0   1.028     0.0     0.0    10.0     0.0     2.5     0.0
 SGRANDE--161  -115.1     0.0     0.0     2.7     0.0     0.0     0.0
                                                 70.2%                1502 SGRANDE-04MQ  1   -83.0    35.3    87.7 0.993F         02
                                                 94.0%                1532 IPATINGD-161  1    73.0   -35.5    79.0
 1571    1  0   1.039     0.0     0.0    14.9     0.0     4.5     0.0
 BURITIZ--138  -116.8     0.0     0.0     6.2     0.0     0.0     0.0
                                                 26.6%                 382 TMARIAS--138  1   -25.4     6.4    25.3                02
                                                 13.5%                1558 PIRAPORA-138  1    10.5    -8.1    12.8
 1572    1  0   1.028     0.0     0.0    47.8     0.0     0.0     0.0
 SJDELREY-138  -110.3     0.0     0.0    15.7     0.0     0.0     0.0
                                                 39.2%                 309 BARBACEN-138  1    43.9   -24.8    49.0                02
                                                 48.6%                 337 LAFAIETE-138  1    55.7   -28.3    60.8                02
                                                 68.9%                1514 BOZEL----138  1   -86.8    17.6    86.1
                                                 51.6%                1538 ITUTING1-138  1   -60.6    19.7    62.0
 1578    1  0   1.028    15.0     0.0    59.2     0.0     3.2     0.0
 UBERABA1-138   -90.8     0.0     0.0    19.9     0.0     0.0     0.0
                                                 11.5%                 392 UBERLAN1-138  1    -5.3     3.1     6.0                02
                                                 25.8%                1564 SACRAMEN-138  1    26.9   -19.0    32.0
                                                 29.3%                1579 UBERABA6-138  1   -41.7   -11.6    42.1
                                                 10.0%                1582 UBERLAN6-138  1   -16.1     3.5    16.1
                                                  4.0%                1583 UBERABA3-138  1    -4.2     3.0     5.1
                                                 10.4%                1584 UBERABA4-138  1    -3.6     4.2     5.4
 1579    1  0   1.039     0.0     0.0    22.8     0.0     6.5     0.0
 UBERABA6-138   -89.5     0.0     0.0     3.2     0.0     0.0     0.0
                                                 29.5%                 330 JAGUARA--138  1    42.9   -19.1    45.2                02
                                                 49.6%                1525 IGARAPAV-138  1  -107.7    11.5   104.2                02
                                                 29.0%                1578 UBERABA1-138  1    42.0    10.9    41.7
 1580    1  0   1.018     0.0     0.0    54.6     0.0    10.0     0.0
 UBERLAN2-138   -89.4     0.0     0.0    13.2     0.0     0.0     0.0
                                                  6.7%                 392 UBERLAN1-138  1    -4.7    -4.6     6.4                02
                                                 39.2%                1587 UBERLAN7-138  1   -49.9     1.3    49.1
CEPEL - CENTRO DE PESQUISAS DE ENERGIA ELETRICA - PROGRAMA DE ANALISE DE REDES - V08MAR05A                                PAG.  77

ANUAL 06/07 * SETEMBRO 2006 PESADA S/SE 19H N/NE 19H * ANAT0 - FSE - C13
RELATORIO COMPLETO DO SISTEMA * AREA  3 * *       CEMIG - DISTRIBUICAO       *

X----------------- D A D O S  -  B A R R A -------------------------X------------ F L U X O S  -  C I R C U I T O S ------------X
 DA BARRA      TENSAO GERACAO INJ EQV  CARGA   ELO CC  SHUNT    MOTOR
 NUM. KV TIPO   MOD/     MW/     MW/     MW/     MW/   Mvar/     Mvar/
     NOME       ANG     Mvar    Mvar    Mvar    Mvar   EQUIV     Mvar  PARA BARRA                    FLUXOS
                                                FLUXO % SHUNT L         NUM.     NOME     NC     MW    Mvar  MVA/V_d   TAP  DEFAS TIE
X------------X-------X-------X-------X-------X-------X-------X-------X----X------------X--X-------X-------X-------X------X-----X---X

 1581    1  0   1.040     0.0     0.0    13.2     0.0     6.5     0.0
 UBERABA5-138   -88.8     0.0     0.0     5.0     0.0     0.0     0.0
                                                 27.1%                1525 IGARAPAV-138  1   -59.1     2.8    56.9                02
                                                 35.1%                1583 UBERABA3-138  1    45.9    -1.3    44.2
 1582    1  0   1.027     0.0     0.0    63.5     0.0     6.3     0.0
 UBERLAN6-138   -88.1     0.0     0.0    20.9     0.0     0.0     0.0
                                                 35.2%                 340 MIRANDA--138  1   -65.0    -1.4    63.3                02
                                                 35.6%                 340 MIRANDA--138  2   -65.7    -1.3    64.0                02
                                                 27.2%                 392 UBERLAN1-138  1    50.8    -2.3    49.5                02
                                                 11.6%                1578 UBERABA1-138  1    16.4    -9.6    18.5
 1583    1  0   1.027     0.0     0.0    41.1     0.0     6.3     0.0
 UBERABA3-138   -90.7     0.0     0.0     9.2     0.0     0.0     0.0
                                                  4.4%                1578 UBERABA1-138  1     4.3    -3.7     5.5
                                                 35.0%                1581 UBERABA5-138  1   -45.4     0.8    44.2
 1584    1  0   1.024     0.0     0.0     2.9     0.0     0.0     0.0
```

```
 UBERABA4-138   -90.3     0.0     0.0     1.2     0.0     0.0     0.0
                                                14.9%                 392 UBERLAN1-138  1    -6.6     4.5     7.8                02
                                                12.7%                1578 UBERABA1-138  1     3.7    -5.7     6.6
 1585    1 -1   0.979     0.0     0.0     0.0     0.0     0.0     0.0
 IBIRITEG-000  -119.1     0.0     0.0     0.0     0.0     0.0     0.0
                                                 0.0%                1515 UTIBIRIT-138  1     0.0     0.0     0.0                41
 1586    1 -1   0.979     0.0     0.0     0.0     0.0     0.0     0.0
 IBIRITEV-000  -119.1     0.0     0.0     0.0     0.0     0.0     0.0
                                                 0.0%                1515 UTIBIRIT-138  1     0.0     0.0     0.0                41
 1587    1  0   1.029     0.0     0.0    28.7     0.0     3.2     0.0
 UBERLAN7-138   -87.7     0.0     0.0    10.4     0.0     0.0     0.0
                                                47.5%                 340 MIRANDA--138  1   -88.9    -0.6    86.4                02
                                                 8.5%                1506 ARAGUARI-138  1     9.7    -5.1    10.7
                                                39.3%                1580 UBERLAN2-138  1    50.5    -1.5    49.1
 1588    1  0   0.973     0.0     0.0    19.7     0.0    15.5     0.0
 VAZANTE--138  -106.3     0.0     0.0     6.9     0.0     0.0     0.0
                                                43.1%                1519 COROMAND-138  1   -47.4    22.4    53.9
                                                25.4%                1551 PARACAT1-138  1    27.7   -13.8    31.8
 1595    1  0   1.102     0.0     0.0     0.0     0.0     0.0     0.0
 SCLARA---138  -110.8     0.0     0.0     0.0     0.0     0.0     0.0
                                                87.0%                1511 StaClara-3GR  1   -60.0    20.1    57.4 1.025F
                                                78.7%                1561 NANUQUE--138  1    60.0   -20.1    57.4
CEPEL - CENTRO DE PESQUISAS DE ENERGIA ELETRICA - PROGRAMA DE ANALISE DE REDES - V08MAR05A                                PAG.  78

ANUAL 06/07 * SETEMBRO 2006 PESADA S/SE 19H N/NE 19H * ANAT0 - FSE - C13
RELATORIO COMPLETO DO SISTEMA * AREA  3 * *       CEMIG - DISTRIBUICAO       *

X----------------- D A D O S  -  B A R R A -------------------------X------------ F L U X O S  -  C I R C U I T O S ------------X
 DA BARRA      TENSAO GERACAO INJ EQV  CARGA   ELO CC  SHUNT    MOTOR
 NUM. KV TIPO   MOD/     MW/     MW/     MW/     MW/   Mvar/     MW/
     NOME       ANG     Mvar    Mvar    Mvar    Mvar   EQUIV    Mvar  PARA BARRA                    FLUXOS
                                                FLUXO % SHUNT L         NUM.     NOME     NC     MW    Mvar  MVA/V_d   TAP  DEFAS TIE
X------------X-------X-------X-------X-------X-------X-------X-------X----X------------X--X-------X-------X-------X------X-----X---X

 1596    1  0   1.035     0.0     0.0    73.6     0.0     0.0     0.0
 ACESITA--230  -120.4     0.0     0.0    14.9     0.0     0.0     0.0
                                                37.1%                1597 ACESITA---69  1     4.9    23.3    23.0 1.000F
                                                53.1%                9030 TIMOTEO--230  1   -78.5   -38.2    84.4
 1597    1  0   0.989     0.0     0.0    53.8     0.0     0.0     0.0
 ACESITA---69  -120.9     0.0     0.0    12.4     0.0     0.0     0.0
                                                37.1%                1596 ACESITA--230  1    -4.9   -22.2    23.0
                                                44.2%                1598 SACARVAL--69  1   -24.5     4.9    25.2
                                                53.6%                1598 SACARVAL--69  2   -24.5     4.9    25.2
 1598    1  0   1.000     0.0     0.0     0.0     0.0     0.0     0.0
 SACARVAL--69  -117.8     0.0     0.0     0.0     0.0     0.0     0.0
                                                45.0%                1597 ACESITA---69  1    25.0    -5.7    25.6
                                                54.6%                1597 ACESITA---69  2    25.0    -5.7    25.6
                                                57.0%                1599 SACARVAL-2MQ  1   -50.0    11.4    51.3 1.000F
 1599    1  1   0.990    50.0     0.0     0.0     0.0     0.0     0.0
 SACARVAL-2MQ  -115.0    -8.9     0.0     0.0     0.0     0.0     0.0
                                                57.0%                1598 SACARVAL--69  1    50.0    -8.9    51.3
 4001    1  0   0.997     0.0     0.0    15.9     0.0     3.3     0.0
 NEPOMU-1-138  -109.0     0.0     0.0     6.8     0.0     0.0     0.0
                                                59.7%                1541 LAVRAS2--138  1   -56.5     2.4    56.7
                                                43.3%                4002 TPONTA-1-138  1    40.6    -5.9    41.1
 4002    1  0   0.976     0.0     0.0    29.4     0.0    20.0     0.0
 TPONTA-1-138  -112.2     0.0     0.0    13.2     0.0     0.0     0.0
                                                42.9%                4001 NEPOMU-1-138  1   -39.4     5.2    40.7
                                                11.0%                4003 VARGI1-1-138  1    10.0     1.6    10.4
 4003    1  0   0.972     7.0     0.0   102.3     0.0    40.2     0.0
```

```
 VARGI1-1-138  -112.5     0.0     0.0    40.8     0.0     0.0     0.0
                                              57.1%                 1541 LAVRAS2--138  1   -69.4    -1.6    71.4
                                              11.2%                 4002 TPONTA-1-138  1   -10.0    -2.7    10.7
                                              13.5%                 4004 VARGI2-1-138  1   -16.0     3.7    16.9
 4004    1  0   0.973     0.0     0.0    17.9     0.0     6.8     0.0
 VARGI2-1-138  -112.1     0.0     0.0     7.6     0.0     0.0     0.0
                                              13.7%                 4003 VARGI1-1-138  1    16.0    -4.5    17.1
                                              37.3%                 4005 TCORA2-1-138  1   -33.9     3.7    35.1
 4005    1  0   0.980     0.0     0.0    18.8     0.0     5.8     0.0
 TCORA2-1-138  -111.1     0.0     0.0     8.0     0.0     0.0     0.0
                                              45.8%                  323 ITUTING2-138  1   -55.5    -8.6    57.3              02
                                              37.4%                 4004 VARGI2-1-138  1    34.2    -4.2    35.2
                                              11.8%                 4010 TCORA1-1-138  1     2.5    10.5    11.1
CEPEL - CENTRO DE PESQUISAS DE ENERGIA ELETRICA - PROGRAMA DE ANALISE DE REDES - V08MAR05A                          PAG.  79

ANUAL 06/07 * SETEMBRO 2006 PESADA S/SE 19H N/NE 19H * ANAT0 - FSE - C13
RELATORIO COMPLETO DO SISTEMA * AREA  3 * *       CEMIG - DISTRIBUICAO       *

X----------------- D A D O S  -  B A R R A ------------------------X------------ F L U X O S  -  C I R C U I T O S ------------X
 DA BARRA      TENSAO GERACAO INJ EQV  CARGA   ELO CC  SHUNT    MOTOR
 NUM. KV TIPO   MOD/     MW/     MW/     MW/     MW/   Mvar/     MW/
     NOME        ANG     Mvar    Mvar    Mvar    Mvar   EQUIV    Mvar  PARA BARRA                   FLUXOS
                                                FLUXO % SHUNT L         NUM.     NOME     NC     MW    Mvar  MVA/V_d   TAP  DEFAS TIE
X------------X-------X-------X-------X-------X-------X-------X-------X----X------------X--X-------X-------X-------X------X-----X---X

 4006    1  0   0.976     1.0     0.0    25.8     0.0     6.9     0.0
 CAMBUQ-1-138  -110.2     0.0     0.0    10.1     0.0     0.0     0.0
                                              48.5%                 4008 CAXAMB-1-138  1   -44.5     6.5    46.1
                                              24.0%                 4010 TCORA1-1-138  1    19.7    -9.7    22.5
 4007    1  0   1.010     0.0     0.0    15.6     0.0     6.1     0.0
 SLOURE-1-138  -104.7     0.0     0.0     6.1     0.0     0.0     0.0
                                              64.1%                 1504 ITAJU3-1-138  1   -80.3    11.1    80.2
                                              51.9%                 4008 CAXAMB-1-138  1    64.7   -11.1    64.9
 4008    1  0   1.003     0.0     0.0    32.2     0.0     9.1     0.0
 CAXAMB-1-138  -106.8     0.0     0.0    13.9     0.0     0.0     0.0
                                              48.9%                 4006 CAMBUQ-1-138  1    46.1    -6.4    46.4
                                              51.7%                 4007 SLOURE-1-138  1   -63.8    12.0    64.7
                                              14.3%                 4009 MINDUR-1-138  1   -14.6   -10.5    17.9
 4009    1  0   1.021     0.0     0.0    15.3     0.0     0.0     0.0
 MINDUR-1-138  -106.0     0.0     0.0     6.7     0.0     0.0     0.0
                                              26.1%                  323 ITUTING2-138  1   -30.0   -14.6    32.7              02
                                              13.1%                 4008 CAXAMB-1-138  1    14.7     7.9    16.3
 4010    1  0   0.975     0.0     0.0    22.0     0.0     6.8     0.0
 TCORA1-1-138  -111.0     0.0     0.0     9.4     0.0     0.0     0.0
                                              12.8%                 4005 TCORA2-1-138  1    -2.4   -11.4    12.0
                                              23.4%                 4006 CAMBUQ-1-138  1   -19.6     8.9    22.0
 4011    1  0   1.051     0.0     0.0     0.0     0.0     0.0     0.0
 PARAISOP-138   -97.0     0.0     0.0     0.0     0.0     0.0     0.0
                                               0.0%                 1504 ITAJU3-1-138  1     0.0     0.0     0.0
 4012    1  0   1.042     0.0     0.0     0.0     0.0     0.0     0.0
  V.PALMA13.8  -114.9     0.0     0.0     0.0     0.0     0.0     0.0
                                               0.0%                 4013  V.PALMAFIC3  1     0.0     0.0     0.0 1.000F
 4013    1  0   1.042     0.0     0.0     0.0     0.0     0.0     0.0
  V.PALMAFIC3  -114.9     0.0     0.0     0.0     0.0     0.0     0.0
                                              38.0%                  398 VPALMA---345  1   -59.3     4.7    57.1              02
                                              38.0%                  399 VPALMA---138  1    59.3    -4.7    57.1              02
                                               0.0%                 4012  V.PALMA13.8  1     0.0     0.0     0.0
 4014    1  0   1.042     0.0     0.0     0.0     0.0     0.0     0.0
  V.PALMAFIC4  -114.8     0.0     0.0     0.0     0.0     0.0     0.0
                                              40.4%                  398 VPALMA---345  1   -63.0     4.8    60.6              02
```

```
                                                 40.4%                  399 VPALMA---138  1    63.0    -4.8    60.6                 02
CEPEL - CENTRO DE PESQUISAS DE ENERGIA ELETRICA - PROGRAMA DE ANALISE DE REDES - V08MAR05A                                PAG.  80

ANUAL 06/07 * SETEMBRO 2006 PESADA S/SE 19H N/NE 19H * ANAT0 - FSE - C13
RELATORIO COMPLETO DO SISTEMA * AREA  3 * *       CEMIG - DISTRIBUICAO       *

X----------------- D A D O S  -  B A R R A -------------------------X------------ F L U X O S  -  C I R C U I T O S ------------X
 DA BARRA      TENSAO GERACAO INJ EQV  CARGA   ELO CC  SHUNT    MOTOR
 NUM. KV TIPO   MOD/     MW/     MW/     MW/     MW/   Mvar/     MW/
     NOME       ANG     Mvar    Mvar    Mvar    Mvar   EQUIV    Mvar  PARA BARRA                    FLUXOS
                                                FLUXO % SHUNT L         NUM.     NOME     NC     MW    Mvar  MVA/V_d   TAP  DEFAS TIE
X------------X-------X-------X-------X-------X-------X-------X-------X----X------------X--X-------X-------X-------X------X-----X---X

 4015    1  0   1.042     0.0     0.0     0.0     0.0     0.0     0.0
  V.PALMAFIC5  -114.8     0.0     0.0     0.0     0.0     0.0     0.0
                                                41.3%                  398 VPALMA---345  1   -64.3     4.9    61.9                 02
                                                41.3%                  399 VPALMA---138  1    64.3    -4.9    61.9                 02
 4016   14  1   1.040    50.0     0.0     0.0     0.0     0.0     0.0
 PICADA---2GR  -106.8    -3.4     0.0     0.0     0.0     0.0     0.0
                                                89.2%                 4017 PICADA---138  1    50.0    -3.4    48.2
 4017  138  0   1.050     0.0     0.0     0.0     0.0     0.0     0.0
 PICADA---138  -111.6     0.0     0.0     0.0     0.0     0.0     0.0
                                                89.2%                 4016 PICADA---2GR  1   -50.0     7.7    48.2 1.000F
                                                50.2%                 4018 CPM------138  1    50.0    -7.7    48.2
 4018  138  0   1.042     0.0     0.0     0.0     0.0     0.0     0.0
 CPM------138  -113.5     0.0     0.0     0.0     0.0     0.0     0.0
                                                49.9%                  332 JUIZFORA-138  1    49.4    -7.5    47.9                 02
                                                49.9%                 4017 PICADA---138  1   -49.4     7.5    47.9
 4020    1  0   1.010     0.0     0.0    72.7     0.0    11.2     0.0
 PNOVA----138  -114.2     0.0     0.0    23.9     0.0     0.0     0.0
                                                36.3%                 1548 OPRETO---138  1    37.1   -20.0    41.8
                                                57.4%                 1560 CANDONGA-138  1  -109.8     7.3   109.0
 4021    1  0   1.013     0.0     0.0    13.5     0.0     0.0     0.0
 MATOZI-1-138  -120.1     0.0     0.0    11.2     0.0     0.0     0.0
                                                38.8%                  353 NEVES----138  1   -76.6   -30.9    81.5                 02
                                                44.7%                 4033 SLAGO1-1-138  1    63.1    19.7    65.2
 4022    1  0   1.034     0.0     0.0    30.7     0.0     0.0     0.0
 PLEOP3-1-138  -118.3     0.0     0.0    11.7     0.0     0.0     0.0
                                                21.7%                  353 NEVES----138  1   -40.7   -23.7    45.6                 02
                                                39.0%                 4023 VESPAS-1-138  1   -50.3    -4.0    48.8
                                                40.2%                 4030 COMINC-1-138  1    60.3    15.9    60.3
 4023    1  0   1.043     0.0     0.0    13.1     0.0     0.0     0.0
 VESPAS-1-138  -117.3     0.0     0.0     2.8     0.0     0.0     0.0
                                                39.0%                 4022 PLEOP3-1-138  1    50.6     3.9    48.7
                                                64.0%                 4029 NGRANJ-1-138  1   -63.7    -6.7    61.5
 4024    1  0   1.038     0.0     0.0    63.0     0.0     3.2     0.0
 NEVES2-1-138  -118.0     0.0     0.0    24.9     0.0     0.0     0.0
                                                45.9%                  353 NEVES----138  1   -65.5   -28.5    68.8                 02
                                                 5.6%                 4026 PAMPUL-1-138  1     2.5     6.8     7.0
CEPEL - CENTRO DE PESQUISAS DE ENERGIA ELETRICA - PROGRAMA DE ANALISE DE REDES - V08MAR05A                                PAG.  81

ANUAL 06/07 * SETEMBRO 2006 PESADA S/SE 19H N/NE 19H * ANAT0 - FSE - C13
RELATORIO COMPLETO DO SISTEMA * AREA  3 * *       CEMIG - DISTRIBUICAO       *

X----------------- D A D O S  -  B A R R A -------------------------X------------ F L U X O S  -  C I R C U I T O S ------------X
 DA BARRA      TENSAO GERACAO INJ EQV  CARGA   ELO CC  SHUNT    MOTOR
 NUM. KV TIPO   MOD/     MW/     MW/     MW/     MW/   Mvar/     MW/
     NOME       ANG     Mvar    Mvar    Mvar    Mvar   EQUIV    Mvar  PARA BARRA                    FLUXOS
                                                FLUXO % SHUNT L         NUM.     NOME     NC     MW    Mvar  MVA/V_d   TAP  DEFAS TIE
X------------X-------X-------X-------X-------X-------X-------X-------X----X------------X--X-------X-------X-------X------X-----X---X
```

```
 4025    1  0   1.044     0.0     0.0    54.5     0.0     3.3     0.0
 SLUZI2-1-138  -117.2     0.0     0.0    28.1     0.0     0.0     0.0
                                                13.2%                 353 NEVES----138  1   -12.4   -16.5    19.8                02
                                                27.4%                4027 VESPA2-1-138  1   -42.1    -8.3    41.1
 4026    1  0   1.033     0.0     0.0    63.0     0.0     0.0     0.0
 PAMPUL-1-138  -118.0     0.0     0.0    24.9     0.0     0.0     0.0
                                                 6.7%                4024 NEVES2-1-138  1    -2.4    -8.4     8.4
                                                40.5%                4027 VESPA2-1-138  1   -60.6   -16.5    60.8
 4027    1  0   1.050     0.0     0.0    46.8     0.0     0.0     0.0
 VESPA2-1-138  -116.7     0.0     0.0    18.2     0.0     0.0     0.0
                                                27.3%                4025 SLUZI2-1-138  1    42.3     8.0    41.0
                                                40.3%                4026 PAMPUL-1-138  1    61.2    17.0    60.5
                                                45.7%                4028 VESPA2-5-500  1  -139.1   -37.0   137.1                02
                                                45.7%                4028 VESPA2-5-500  2  -139.1   -37.0   137.1                02
                                                83.6%                4029 NGRANJ-1-138  1   128.0    30.9   125.4
 4029    1  0   1.044     0.0     0.0    63.7     0.0     0.0     0.0
 NGRANJ-1-138  -117.2     0.0     0.0    23.1     0.0     0.0     0.0
                                                64.0%                4023 VESPAS-1-138  1    63.8     6.8    61.4
                                                83.6%                4027 VESPA2-1-138  1  -127.5   -29.9   125.4
 4030    1  0   1.020     0.0     0.0     9.3     0.0     0.0     0.0
 COMINC-1-138  -119.4     0.0     0.0     2.7     0.0     0.0     0.0
                                                40.4%                4022 PLEOP3-1-138  1   -59.8   -15.5    60.5
                                                34.0%                4031 SLAGO3-1-138  1    50.5    12.8    51.1
 4031    1  0   1.000     0.0     0.0    43.9     0.0     3.0     0.0
 SLAGO3-1-138  -121.0     0.0     0.0    15.3     0.0     0.0     0.0
                                                34.3%                4030 COMINC-1-138  1   -49.8   -12.7    51.5
                                                 4.8%                4032 SLAGO2-1-138  1     5.9     0.4     6.0
 4032    1  0   0.999     0.0     0.0    37.7     0.0     3.0     0.0
 SLAGO2-1-138  -121.1     0.0     0.0     9.6     0.0     0.0     0.0
                                                 4.8%                4031 SLAGO3-1-138  1    -5.9    -1.0     6.0
                                                25.8%                4033 SLAGO1-1-138  1   -31.8    -5.6    32.3
 4033    1  0   1.002     0.0     0.0    30.8     0.0     0.0     0.0
 SLAGO1-1-138  -120.9     0.0     0.0    14.5     0.0     0.0     0.0
                                                44.9%                4021 MATOZI-1-138  1   -62.6   -19.8    65.6
                                                25.8%                4032 SLAGO2-1-138  1    31.8     5.3    32.2
 4036    1  0   1.028     0.0     0.0    19.4     0.0     0.0     0.0
 BETIM4---138  -119.0     0.0     0.0     6.4     0.0     0.0     0.0
                                                 2.6%                1515 UTIBIRIT-138  1     5.7    -0.8     5.6                41
                                                13.7%                1565 CINCO--1-138  1   -25.1    -5.6    25.0
CEPEL - CENTRO DE PESQUISAS DE ENERGIA ELETRICA - PROGRAMA DE ANALISE DE REDES - V08MAR05A                                PAG.  82

ANUAL 06/07 * SETEMBRO 2006 PESADA S/SE 19H N/NE 19H * ANAT0 - FSE - C13
RELATORIO COMPLETO DO SISTEMA * AREA  3 * *       CEMIG - DISTRIBUICAO       *

X----------------- D A D O S  -  B A R R A ------------------------X------------ F L U X O S  -  C I R C U I T O S ------------X
 DA BARRA      TENSAO GERACAO INJ EQV  CARGA   ELO CC  SHUNT    MOTOR
 NUM. KV TIPO   MOD/     MW/     MW/     MW/     MW/   Mvar/     MW/
     NOME       ANG     Mvar    Mvar    Mvar    Mvar   EQUIV    Mvar  PARA BARRA                    FLUXOS
                                                FLUXO % SHUNT L         NUM.     NOME     NC     MW    Mvar  MVA/V_d   TAP  DEFAS TIE
X------------X-------X-------X-------X-------X-------X-------X-------X----X------------X--X-------X-------X-------X------X-----X---X

 4037    1  0   0.979     0.0     0.0    18.1     0.0     0.0     0.0
 UNAI2----138  -108.1     0.0     0.0     6.3     0.0     0.0     0.0
                                                31.6%                1551 PARACAT1-138  1    36.3   -13.5    39.5
                                                44.8%                4038 UNAI3----138  1   -54.4     7.2    56.0
 4038    1  0   0.993     0.0     0.0    28.3     0.0     0.0     0.0
 UNAI3----138  -104.9     0.0     0.0     7.4     0.0     0.0     0.0
                                                45.0%                4037 UNAI2----138  1    55.5    -6.5    56.3
                                                67.5%                4041 UHQUEIMA-138  1   -83.8    -0.9    84.4
```

```
 4039    1  1   1.030    90.0     0.0     0.0     0.0     0.0     0.0
 QUEIMADO-3GR   -94.2    14.6     0.0     0.0     0.0     0.0     0.0
                                                 0.9%                 4041 UHQUEIMA-138  1    90.0    14.6    88.5
 4041    1  0   1.046     0.0     0.0     2.2     0.0     0.0     0.0
 UHQUEIMA-138   -98.2     0.0     0.0     0.7     0.0     0.0     0.0
                                                67.4%                 4038 UNAI3----138  1    87.8     7.5    84.2
                                                 0.9%                 4039 QUEIMADO-3GR  1   -90.0    -8.2    86.4 1.025F
 4044    1  1   1.030   144.0     0.0     0.0     0.0     0.0     0.0
 FUNILGRD-3GR  -101.1     4.6     0.0     0.0     0.0     0.0     0.0
                                                73.6%                 1543 UHFUNIL--138  1   144.0     4.6   139.9
 4061    1  0   1.008     0.0     0.0    52.6     0.0    12.2     0.0
 CARATING-138  -127.5     0.0     0.0    17.8     0.0     0.0     0.0
                                                57.4%                 1535 IPATINGT-138  1   -55.5     1.6    55.1
                                                28.0%                 4062 INHAPIM--138  1   -35.2    -2.0    35.0
                                                39.7%                 4063 MANHUACU-138  1    38.1    -5.2    38.1
 4062    1  0   1.018     0.0     0.0    13.4     0.0     7.5     0.0
 INHAPIM--138  -126.2     0.0     0.0     3.9     0.0     0.0     0.0
                                                38.5%                 1535 IPATINGT-138  1   -48.9     2.5    48.1
                                                27.9%                 4061 CARATING-138  1    35.5     1.1    34.9
 4063    1  0   0.989     0.0     0.0    29.6     0.0     8.2     0.0
 MANHUACU-138  -131.9     0.0     0.0     3.3     0.0     0.0     0.0
                                                39.2%                 4061 CARATING-138  1   -37.0     3.4    37.6
                                                20.7%                 9001 MANHUACU-138  1     7.4     1.5     7.6              18
 4070    1  0   1.018     0.0     0.0     0.0     0.0     0.0     0.0
 ARACUAI--230  -110.8     0.0     0.0     0.0     0.0     0.0     0.0
                                                14.7%                 4071 IRAPE----230  1   -89.4     4.8    87.9
                                                39.1%                 4081 ARACUAI--138  1    89.4    -4.8    87.9 0.971*
 4071    1  0   1.021     0.0     0.0     0.0     0.0     0.0     0.0
 IRAPE----230  -109.2     0.0     0.0     0.0     0.0     0.0     0.0
                                                39.4%                 4065 IRAPE----345  1   -89.9    11.5    88.7              02
                                                14.8%                 4070 ARACUAI--230  1    89.9   -11.5    88.7
CEPEL - CENTRO DE PESQUISAS DE ENERGIA ELETRICA - PROGRAMA DE ANALISE DE REDES - V08MAR05A                              PAG.  83

ANUAL 06/07 * SETEMBRO 2006 PESADA S/SE 19H N/NE 19H * ANAT0 - FSE - C13
RELATORIO COMPLETO DO SISTEMA * AREA  3 * *       CEMIG - DISTRIBUICAO       *

X----------------- D A D O S  -  B A R R A -------------------------X------------ F L U X O S  -  C I R C U I T O S ------------X
 DA BARRA      TENSAO GERACAO INJ EQV  CARGA   ELO CC  SHUNT    MOTOR
 NUM. KV TIPO   MOD/     MW/     MW/     MW/     MW/   Mvar/     MW/
     NOME       ANG     Mvar    Mvar    Mvar    Mvar   EQUIV    Mvar  PARA BARRA                    FLUXOS
                                                FLUXO % SHUNT L         NUM.     NOME     NC     MW    Mvar  MVA/V_d   TAP  DEFAS TIE
X------------X-------X-------X-------X-------X-------X-------X-------X----X------------X--X-------X-------X-------X------X-----X---X

 4080    1  0   1.010     0.0     0.0    56.2     0.0     0.0     0.0
 PPARAISO-138  -119.6     0.0     0.0    12.3     0.0     0.0     0.0
                                                30.0%                 1557 TOTONI---138  1     4.8   -28.1    28.2
                                                66.4%                 4081 ARACUAI--138  1   -61.0    15.8    62.4
 4081    1  0   1.050     0.0     0.0    24.1     0.0     0.0     0.0
 ARACUAI--138  -112.4     0.0     0.0     5.5     0.0     0.0     0.0
                                                38.0%                 4070 ARACUAI--230  1   -89.4     7.4    85.4
                                                67.4%                 4080 PPARAISO-138  1    65.3   -12.9    63.4
 9005    1  0   1.031     0.0     0.0    17.8     0.0     0.0     0.0
 GVALAD-T8-13  -124.5     0.0     0.0     4.5     0.0     0.0     0.0
                                                54.0%                  394 VALADARE-230  1   -17.8    -4.5    17.8 1.009*       02
 9006    1  0   1.019     0.0     0.0    72.2     0.0     0.0     0.0
 BCOCAIS2-230  -118.6     0.0     0.0    27.6     0.0     0.0     0.0
                                                54.5%                  373 TAQUARIL-230  1  -131.2   -19.8   130.2              02
                                                24.4%                 1520 CSBM-----230  1    59.0    -7.8    58.4
 9011    1  0   1.031     0.0     0.0    24.7     0.0     0.0     0.0
 IPATINGA1-13  -125.9     0.0     0.0     6.2     0.0     0.0     0.0
```

```
                                                   74.9%                 9010 IPATING-FIC1  1   -24.7    -6.2    24.7 0.996*        41
 9020    1  0   1.030     0.0     0.0    31.3     0.0    11.5     0.0
 ITABIRA2--13  -127.1     0.0     0.0     6.4     0.0     0.0     0.0
                                                   93.3%                 1534 ITABIRA--230  1   -31.3     5.1    30.8 0.991*
 9030    1  0   1.035     0.0     0.0     0.0     0.0     0.0     0.0
 TIMOTEO--230  -120.4     0.0     0.0     0.0     0.0     0.0     0.0
                                                   65.7%                 1530 IPATINGT-230  1   -98.7   -44.2   104.5
                                                   53.0%                 1596 ACESITA--230  1    78.5    38.2    84.3
                                                   20.7%                 9032 TIMOTEO-FIC1  1     6.8     1.9     6.8 0.975F
                                                   41.1%                 9033 TIMOTEO-FIC2  1    13.4     4.1    13.6 0.975F
 9031    1  0   1.031     0.0     0.0     6.8     0.0     0.0     0.0
 TIMOTEO1--13  -122.1     0.0     0.0     1.7     0.0     0.0     0.0
                                                   20.6%                 9032 TIMOTEO-FIC1  1    -6.8    -1.7     6.8 0.979*
 9032    1  0   1.057     0.0     0.0     0.0     0.0     0.0     0.0
 TIMOTEO-FIC1  -121.2     0.0     0.0     0.0     0.0     0.0     0.0
                                                   20.2%                 9030 TIMOTEO--230  1    -6.8    -1.8     6.7
                                                   20.2%                 9031 TIMOTEO1--13  1     6.8     1.8     6.7
 9033    1  0   1.052     0.0     0.0     0.0     0.0     0.0     0.0
 TIMOTEO-FIC2  -122.0     0.0     0.0     0.0     0.0     0.0     0.0
                                                   40.0%                 9030 TIMOTEO--230  1   -13.4    -3.7    13.2
                                                   40.0%                 9036 TIMOTEO2--13  1    13.4     3.7    13.2
CEPEL - CENTRO DE PESQUISAS DE ENERGIA ELETRICA - PROGRAMA DE ANALISE DE REDES - V08MAR05A                                PAG.  84

ANUAL 06/07 * SETEMBRO 2006 PESADA S/SE 19H N/NE 19H * ANAT0 - FSE - C13
RELATORIO COMPLETO DO SISTEMA * AREA  3 * *       CEMIG - DISTRIBUICAO       *

X----------------- D A D O S  -  B A R R A -------------------------X------------ F L U X O S  -  C I R C U I T O S -------------X
 DA BARRA      TENSAO GERACAO INJ EQV  CARGA   ELO CC  SHUNT    MOTOR
 NUM. KV TIPO   MOD/     MW/     MW/     MW/     MW/   Mvar/     MW/
     NOME       ANG     Mvar    Mvar    Mvar    Mvar   EQUIV    Mvar  PARA BARRA                    FLUXOS
                                                FLUXO % SHUNT L         NUM.     NOME     NC     MW    Mvar  MVA/V_d   TAP  DEFAS TIE
X------------X-------X-------X-------X-------X-------X-------X-------X----X------------X--X-------X-------X-------X------X-----X---X

 9036    1  0   1.031     0.0     0.0    13.4     0.0     0.0     0.0
 TIMOTEO2--13  -123.7     0.0     0.0     3.3     0.0     0.0     0.0
                                                   40.6%                 9033 TIMOTEO-FIC2  1   -13.4    -3.3    13.4 0.987*
 9040    1  0   1.042     0.0     0.0   171.9     0.0     0.0     0.0
 USIMINA1-230  -120.1     0.0     0.0    21.1     0.0     0.0     0.0
                                                   54.9%                 1530 IPATINGT-230  1  -171.9   -21.1   166.3
 9045    1  0   1.045     0.0     0.0   104.0     0.0     0.0     0.0
 USIMINA2-230  -119.8     0.0     0.0    21.1     0.0     0.0     0.0
                                                   33.5%                  345 MESQUITA-230  1  -104.0   -21.1   101.6              02


TOTAIS DA AREA  3


X--------X--------X--------X--------X--------X--------X--------X--------X
  GERACAO  INJ EQV   CARGA   ELO CC    SHUNT   EXPORT   IMPORT   PERDAS
    MW/      MW/      MW/     MW/     Mvar/     MW/      MW/      MW/
   Mvar     Mvar     Mvar    Mvar     EQUIV    Mvar     Mvar     Mvar
X--------X--------X--------X--------X--------X--------X--------X--------X

    580.0      0.0   4410.6      0.0    575.7    579.5   4498.8     88.8
      1.1      0.0   1304.9      0.0      0.0    241.0    970.9      1.9
CEPEL - CENTRO DE PESQUISAS DE ENERGIA ELETRICA - PROGRAMA DE ANALISE DE REDES - V08MAR05A                                PAG.  85

ANUAL 06/07 * SETEMBRO 2006 PESADA S/SE 19H N/NE 19H * ANAT0 - FSE - C13
RELATORIO COMPLETO DO SISTEMA * AREA  4 * *         C T E E P - RSP          *
```

```
X----------------- D A D O S  -  B A R R A ------------------------X------------ F L U X O S  -  C I R C U I T O S ------------X
 DA BARRA      TENSAO GERACAO INJ EQV  CARGA   ELO CC  SHUNT    MOTOR
 NUM. KV TIPO   MOD/     MW/     MW/    MW/    MW/   Mvar/     MW/
     NOME       ANG     Mvar    Mvar   Mvar   Mvar   EQUIV     Mvar  PARA BARRA                    FLUXOS
                                                FLUXO % SHUNT L         NUM.     NOME     NC     MW    Mvar  MVA/V_d   TAP  DEFAS TIE
X------------X-------X-------X-------X-------X-------X-------X-------X----X------------X--X-------X-------X-------X------X-----X---X

  410  230  0   1.009     0.0     0.0     0.0     0.0     0.0     0.0
 E.SOUZA--230   -96.5     0.0     0.0     0.0     0.0     0.0     0.0
                                                96.2%                  411 E.SOUZA--088  1   140.1    39.6   144.3 0.950*
                                                96.2%                  411 E.SOUZA--088  3   140.1    39.6   144.3 0.950*
                                                 1.2%                  412 E.Souza---88  1   125.5    -4.9   124.5
                                                86.9%                  421 PIRITUBA-230  1   263.7   105.8   281.6
                                                44.5%                  424 ANHANG-2-230  1  -109.2   -96.1   144.2
                                                55.8%                  590 CABREUVA-230  2  -210.6   -45.9   213.6              05
                                                55.8%                  590 CABREUVA-230  4  -210.6   -45.9   213.6              05
                                                43.3%                  625 BOTUCATU-230  1  -139.0     7.8   138.0              05
  411    1  0   1.040     0.0     0.0     0.0     0.0    68.1     0.0
 E.SOUZA--088  -101.6     0.0     0.0     0.0     0.0     0.0     0.0
                                                91.4%                  410 E.SOUZA--230  1  -140.1   -26.4   137.1
                                                91.4%                  410 E.SOUZA--230  3  -140.1   -26.4   137.1
                                                76.7%                  412 E.Souza---88  2   -78.4   -14.8    76.7
                                                91.4%                  412 E.Souza---88  4  -140.1   -26.4   137.0
                                                 5.0%                 3411 E.SOUZA--088  1   498.6   162.3   504.2              28
                                                 0.0%                 3412 ESOUZA-088    1     0.0     0.0     0.0              42
  412   88  0   1.009     0.0     0.0     0.0     0.0     0.0     0.0
 E.Souza---88   -96.5     0.0     0.0     0.0     0.0     0.0     0.0
                                                 1.2%                  410 E.SOUZA--230  1  -125.5     4.9   124.5
                                                80.8%                  411 E.SOUZA--088  2    78.4    22.2    80.8 0.950*
                                                96.2%                  411 E.SOUZA--088  4   140.1    39.6   144.3 0.950*
                                                86.9%                  421 PIRITUBA-230  2   263.6   105.8   281.6
                                                31.6%                  423 ANHANG-1-230  1    64.7   -80.6   102.5
                                                55.8%                  590 CABREUVA-230  1  -210.6   -45.9   213.7              05
                                                55.8%                  590 CABREUVA-230  3  -210.6   -45.9   213.7              05
  414    1  0   1.033     0.0     0.0     0.0     0.0     0.0     0.0
 OESTE ---440   -88.2     0.0     0.0     0.0     0.0     0.0     0.0
                                                54.7%                  415 OESTE----088  1   224.0    30.2   218.8
                                                55.1%                  415 OESTE----088  2   225.7    30.4   220.4
                                                55.1%                  415 OESTE----088  3   225.7    30.4   220.4
                                                36.6%                  561 BAURU----440  1  -574.1   -51.3   557.9              05
                                                36.6%                  561 BAURU----440  2  -574.1   -51.3   557.9              05
                                                15.0%                  581 EMBUGUAC-440  1   236.4     5.7   228.9              05
                                                15.0%                  581 EMBUGUAC-440  2   236.4     5.7   228.9              05
  415    1  0   0.999     0.0     0.0     0.0     0.0    62.9     0.0
 OESTE----088   -93.0     0.0     0.0     0.0     0.0     0.0     0.0
                                                56.1%                  414 OESTE ---440  1  -224.0   -11.2   224.4 0.975*
                                                56.5%                  414 OESTE ---440  2  -225.7   -11.3   226.1 0.975*
                                                56.5%                  414 OESTE ---440  3  -225.7   -11.3   226.1 0.975*
                                                 6.8%                 3415 OESTE--088    1   675.3    96.7   682.6              42
                                                 0.0%                 3416 OESTE-EL88KV  1     0.0     0.0     0.0              28
CEPEL - CENTRO DE PESQUISAS DE ENERGIA ELETRICA - PROGRAMA DE ANALISE DE REDES - V08MAR05A                              PAG.  86

ANUAL 06/07 * SETEMBRO 2006 PESADA S/SE 19H N/NE 19H * ANAT0 - FSE - C13
RELATORIO COMPLETO DO SISTEMA * AREA  4 * *        C T E E P - RSP          *

X----------------- D A D O S  -  B A R R A ------------------------X------------ F L U X O S  -  C I R C U I T O S ------------X
 DA BARRA      TENSAO GERACAO INJ EQV  CARGA   ELO CC  SHUNT    MOTOR
 NUM. KV TIPO   MOD/     MW/     MW/    MW/    MW/   Mvar/     MW/
     NOME       ANG     Mvar    Mvar   Mvar   Mvar   EQUIV     Mvar  PARA BARRA                    FLUXOS
```

```
                                                  FLUXO % SHUNT L          NUM.     NOME     NC     MW    Mvar  MVA/V_d   TAP  DEFAS TIE
X------------X-------X-------X-------X-------X-------X-------X-------X----X------------X--X-------X-------X-------X------X-----X---X

 421  230  0   0.986     0.0     0.0     0.0     0.0     0.0     0.0
PIRITUBA-230   -98.6     0.0     0.0     0.0     0.0     0.0     0.0
                                                 87.5%                  410 E.SOUZA--230  1  -261.4   -98.4   283.4
                                                 87.5%                  412 E.Souza---88  2  -261.4   -98.4   283.4
                                                 94.9%                  422 PIRITUBA-088  1   131.3    49.4   142.3 0.953*
                                                 93.5%                  422 PIRITUBA-088  2   129.4    48.7   140.2 0.953*
                                                 94.6%                  422 PIRITUBA-088  3   130.9    49.3   141.9 0.953*
                                                 94.9%                  422 PIRITUBA-088  4   131.3    49.4   142.3 0.953*
 422    1  0   1.000     0.0     0.0     0.0     0.0    63.0     0.0
PIRITUBA-088  -104.6     0.0     0.0     0.0     0.0     0.0     0.0
                                                 90.4%                  421 PIRITUBA-230  1  -131.3   -34.4   135.7
                                                 89.1%                  421 PIRITUBA-230  2  -129.4   -33.9   133.7
                                                 90.2%                  421 PIRITUBA-230  3  -130.9   -34.3   135.3
                                                 90.4%                  421 PIRITUBA-230  4  -131.3   -34.4   135.7
                                                  5.6%                 3422 PIRITUBA-088  1   522.8   199.9   559.7                28
 423  230  0   1.016     0.0     0.0     0.0     0.0     0.0     0.0
ANHANG-1-230   -97.0     0.0     0.0     0.0     0.0     0.0     0.0
                                                 30.8%                  412 E.Souza---88  1   -64.5    78.1    99.7
                                                 22.2%                  425 TRCEN-1--230  1    64.5   -78.1    99.7
 424  230  0   1.021     0.0     0.0     0.0     0.0     0.0     0.0
ANHANG-2-230   -95.9     0.0     0.0     0.0     0.0     0.0     0.0
                                                 43.8%                  410 E.SOUZA--230  1   109.6    94.7   141.8
                                                 49.0%                  426 TRCEN-2--230  1   219.6   -47.5   220.0
                                                 51.1%                  431 ANHANG---230  1  -329.2   -47.2   325.7
 425  230  0   1.019     0.0     0.0     0.0     0.0     2.2     0.0
TRCEN-1--230   -97.1     0.0     0.0     0.0     0.0     0.0     0.0
                                                 22.0%                  423 ANHANG-1-230  1   -64.5    77.1    98.6
                                                 24.2%                  427 CENTRO---230  1    64.5   -74.9    97.0
 426    1  0   1.022     0.0     0.0     0.0     0.0     0.0     0.0
TRCEN-2--230   -96.5     0.0     0.0     0.0     0.0     0.0     0.0
                                                 48.9%                  424 ANHANG-2-230  1  -219.2    48.1   219.7
                                                 54.9%                  427 CENTRO---230  1   219.2   -48.1   219.7
 427  230  0   1.022     0.0     0.0     0.0     0.0     0.0     0.0
CENTRO---230   -97.4     0.0     0.0     0.0     0.0     0.0     0.0
                                                 15.8%                  425 TRCEN-1--230  1   -64.4    -4.5    63.2
                                                 54.0%                  426 TRCEN-2--230  1  -219.1   -28.1   216.2
                                                 25.1%                  428 CENTRO----88  1    63.9    -2.7    62.6 1.074*
                                                 25.3%                  428 CENTRO----88  2    64.7    -2.7    63.4 1.074*
                                                 41.8%                  429 CENTRO----20  3    51.0    12.5    51.4 0.985*
                                                 41.8%                  429 CENTRO----20  4    51.0    12.5    51.4 0.985*
                                                 39.5%                  429 CENTRO----20  5    52.9    13.0    53.3 0.985*
CEPEL - CENTRO DE PESQUISAS DE ENERGIA ELETRICA - PROGRAMA DE ANALISE DE REDES - V08MAR05A                                PAG.  87

ANUAL 06/07 * SETEMBRO 2006 PESADA S/SE 19H N/NE 19H * ANAT0 - FSE - C13
RELATORIO COMPLETO DO SISTEMA * AREA  4 * *         C T E E P - RSP          *

X----------------- D A D O S  -  B A R R A ------------------------X------------ F L U X O S  -  C I R C U I T O S ------------X
 DA BARRA      TENSAO GERACAO INJ EQV  CARGA   ELO CC  SHUNT    MOTOR
 NUM. KV TIPO   MOD/     MW/     MW/     MW/     MW/   Mvar/     MW/
     NOME       ANG     Mvar    Mvar    Mvar    Mvar   EQUIV    Mvar  PARA BARRA                    FLUXOS
                                                  FLUXO % SHUNT L          NUM.     NOME     NC     MW    Mvar  MVA/V_d   TAP  DEFAS TIE
X------------X-------X-------X-------X-------X-------X-------X-------X----X------------X--X-------X-------X-------X------X-----X---X

 428    1  0   0.955     0.0     0.0     0.0     0.0    17.5     0.0
CENTRO----88  -100.6     0.0     0.0     0.0     0.0     0.0     0.0
                                                 26.9%                  427 CENTRO---230  1   -63.9     6.2    67.2
                                                 27.2%                  427 CENTRO---230  2   -64.7     6.2    68.0
```

```
                                                                 1.3%                  3428 CENTRO---088  1   128.6     5.1   134.7                28
 429    1  0   1.025     0.0     0.0     0.0     0.0    34.0     0.0
CENTRO----20  -100.6     0.0     0.0     0.0     0.0     0.0     0.0
                                                                41.2%                   427 CENTRO---230  3   -51.0    -9.6    50.6
                                                                41.2%                   427 CENTRO---230  4   -51.0    -9.6    50.6
                                                                38.9%                   427 CENTRO---230  5   -52.9    -9.9    52.5
                                                                 1.6%                  3429 CENTRO---020  1   154.9    63.1   163.2                28
 430    1  0   0.986     0.0     0.0     0.0     0.0     0.0     0.0
ANHANG---345   -93.0     0.0     0.0     0.0     0.0     0.0     0.0
                                                                68.0%                   431 ANHANG---230  1   329.3    62.1   340.0 0.957F
                                                                28.4%                   495 M.FORNAS-345  1  -329.3   -62.1   340.0
 431  230  0   1.022     0.0     0.0     0.0     0.0     0.0     0.0
ANHANG---230   -95.9     0.0     0.0     0.0     0.0     0.0     0.0
                                                                51.1%                   424 ANHANG-2-230  1   329.3    45.3   325.3
                                                                65.1%                   430 ANHANG---345  1  -329.3   -45.3   325.3
 433    1  0   1.025     0.0     0.0     0.0     0.0     0.0     0.0
NOR-T70A-345   -90.6     0.0     0.0     0.0     0.0     0.0     0.0
                                                                44.6%                   129 MOGI-----345  1  -283.0  -165.8   320.1                01
                                                                26.8%                   442 NORDESTE-345  1   283.0   165.8   320.1
 434    1  0   1.024     0.0     0.0     0.0     0.0     0.0     0.0
NOR-T70B-345   -90.4     0.0     0.0     0.0     0.0     0.0     0.0
                                                                70.3%                   126 GUARULHO-345  1  -513.4  -106.6   512.0                01
                                                                70.3%                   442 NORDESTE-345  1   513.4   106.6   512.0
 435    1  0   1.039     0.0     0.0     0.0     0.0     0.0     0.0
NORTE----345   -88.0     0.0     0.0     0.0     0.0     0.0     0.0
                                                                23.8%                   126 GUARULHO-345  1  -443.2     1.1   426.4                01
                                                                23.8%                   126 GUARULHO-345  2  -443.2     1.1   426.4                01
                                                                58.0%                   436 NORTE----088  2   236.5    48.1   232.2 1.022*
                                                                57.8%                   436 NORTE----088  3   235.6    47.9   231.4 1.022*
                                                                58.5%                   436 NORTE----088  4   238.2    48.4   233.9 1.022*
                                                                27.6%                   438 REALE----345  1    88.0   -73.3   110.2
                                                                27.6%                   438 REALE----345  2    88.0   -73.3   110.2
CEPEL - CENTRO DE PESQUISAS DE ENERGIA ELETRICA - PROGRAMA DE ANALISE DE REDES - V08MAR05A                                          PAG.  88

ANUAL 06/07 * SETEMBRO 2006 PESADA S/SE 19H N/NE 19H * ANAT0 - FSE - C13
RELATORIO COMPLETO DO SISTEMA * AREA  4 * *         C T E E P - RSP          *

X------------------ D A D O S  -  B A R R A -------------------------X------------- F L U X O S  -  C I R C U I T O S -------------X
 DA BARRA      TENSAO GERACAO INJ EQV  CARGA   ELO CC  SHUNT    MOTOR
 NUM. KV TIPO   MOD/     MW/     MW/     MW/     MW/   Mvar/     MW/
     NOME       ANG     Mvar    Mvar    Mvar    Mvar   EQUIV    Mvar  PARA BARRA                    FLUXOS
                                                FLUXO % SHUNT L         NUM.     NOME     NC     MW    Mvar  MVA/V_d   TAP  DEFAS TIE
X------------X-------X-------X-------X-------X-------X-------X-------X----X------------X--X-------X-------X-------X------X-----X---X

 436    1  0   0.999     0.0     0.0     0.0     0.0    86.3     0.0
NORTE----088   -95.5     0.0     0.0     0.0     0.0     0.0     0.0
                                                                59.3%                   435 NORTE----345  2  -236.5   -16.6   237.2
                                                                59.1%                   435 NORTE----345  3  -235.6   -16.5   236.4
                                                                59.7%                   435 NORTE----345  4  -238.2   -16.7   238.9
                                                                 4.6%                  3436 NORTE----088  1   455.6    84.8   463.7                28
                                                                 2.6%                  3437 NORTE-----88  1   254.7    51.3   260.0                29
 438    1  0   1.035     0.0     0.0     0.0     0.0  -141.3     0.0
REALE----345   -89.5     0.0     0.0     0.0     0.0     0.0     0.0
                                                                32.0%                   435 NORTE----345  1   -88.0   -99.0   128.0
                                                                32.0%                   435 NORTE----345  2   -88.0   -99.0   128.0
                                                                21.0%                   440 REALE----020  1    26.9    12.0    28.4 0.989*
                                                                21.0%                   440 REALE----020  2    26.9    12.0    28.4 0.989*
                                                                15.3%                   441 M.REALE -088  1    61.1    16.4    61.2 1.027*
                                                                15.3%                   441 M.REALE -088  2    61.1    16.4    61.2 1.027*
 439  345  0   1.040     0.0     0.0     0.0     0.0     0.0     0.0
```

```
 ANHANG---345   -87.7     0.0     0.0     0.0     0.0     0.0     0.0
                                                 0.0%                  126 GUARULHO-345  1     0.0     0.0     0.0                01
                                                 0.0%                  126 GUARULHO-345  2     0.0     0.0     0.0                01
                                                 0.0%                  495 M.FORNAS-345  1     0.0     0.0     0.0
  440    1  0   1.024     0.0     0.0     0.0     0.0     0.0     0.0
 REALE----020   -92.4     0.0     0.0     0.0     0.0     0.0     0.0
                                                20.8%                  438 REALE----345  1   -26.9   -10.4    28.1
                                                20.8%                  438 REALE----345  2   -26.9   -10.4    28.1
                                                 0.6%                 3440 M.REALE--020  1    53.7    20.7    56.2                28
  441    1  0   0.999     0.0     0.0     0.0     0.0     0.0     0.0
 M.REALE -088   -91.5     0.0     0.0     0.0     0.0     0.0     0.0
                                                15.7%                  438 REALE----345  1   -61.1   -14.2    62.8
                                                15.7%                  438 REALE----345  2   -61.1   -14.2    62.8
                                                 1.3%                 3441 M.REALE -088  1   122.3    28.3   125.6                28
  442    1  0   1.021     0.0     0.0     0.0     0.0     0.0     0.0
 NORDESTE-345   -90.9     0.0     0.0     0.0     0.0     0.0     0.0
                                                26.9%                  433 NOR-T70A-345  1  -282.8  -167.3   321.8
                                                70.4%                  434 NOR-T70B-345  1  -512.8  -105.3   512.7
                                                69.3%                  443 NORDESTE--88  1   267.7    91.7   277.1 0.983*
                                                67.5%                  443 NORDESTE--88  2   260.7    89.4   269.9 0.983*
                                                69.1%                  443 NORDESTE--88  3   267.2    91.6   276.6 0.983*
CEPEL - CENTRO DE PESQUISAS DE ENERGIA ELETRICA - PROGRAMA DE ANALISE DE REDES - V08MAR05A                                PAG.  89

ANUAL 06/07 * SETEMBRO 2006 PESADA S/SE 19H N/NE 19H * ANAT0 - FSE - C13
RELATORIO COMPLETO DO SISTEMA * AREA  4 * *         C T E E P - RSP          *

X----------------- D A D O S  -  B A R R A ------------------------X------------ F L U X O S  -  C I R C U I T O S ------------X
 DA BARRA      TENSAO GERACAO INJ EQV  CARGA   ELO CC  SHUNT    MOTOR
 NUM. KV TIPO   MOD/     MW/     MW/     MW/     MW/   Mvar/     MW/
     NOME       ANG     Mvar    Mvar    Mvar    Mvar   EQUIV    Mvar  PARA BARRA                    FLUXOS
                                                FLUXO % SHUNT L         NUM.     NOME     NC     MW    Mvar  MVA/V_d   TAP  DEFAS TIE
X------------X-------X-------X-------X-------X-------X-------X-------X----X------------X--X-------X-------X-------X------X-----X---X

  443    1  0   1.000     0.0     0.0     0.0     0.0    57.6     0.0
 NORDESTE--88   -99.2     0.0     0.0     0.0     0.0     0.0     0.0
                                                68.1%                  442 NORDESTE-345  1  -267.7   -49.8   272.2
                                                66.3%                  442 NORDESTE-345  2  -260.7   -48.5   265.2
                                                67.9%                  442 NORDESTE-345  3  -267.2   -49.7   271.8
                                                 3.1%                 3443 NORDESTE-088  1   289.1   103.1   306.9                28
                                                 5.2%                 3444 NORD-BAND-88  1   506.5   102.5   516.8                29
  446  230  0   1.019     0.0     0.0     0.0     0.0     0.0     0.0
 MOGI-EP--230   -91.4     0.0     0.0     0.0     0.0     0.0     0.0
                                                48.2%                  447 MOGI-EP---88  1    29.1    -4.6    28.9 1.032*
                                                49.4%                  447 MOGI-EP---88  2    74.5   -11.7    74.0 1.032*
                                                49.6%                  447 MOGI-EP---88  3    74.9   -11.7    74.4 1.032*
                                                49.5%                  448 ITAPETI--230  1  -134.0   -74.4   150.4
                                                36.0%                  451 AVillar-Y230  1   -44.5   102.3   109.5
  447    1  0   0.999     0.0     0.0     0.0     0.0    62.9     0.0
 MOGI-EP---88   -95.0     0.0     0.0     0.0     0.0     0.0     0.0
                                                49.7%                  446 MOGI-EP--230  1   -29.1     6.4    29.8
                                                50.9%                  446 MOGI-EP--230  2   -74.5    16.5    76.4
                                                51.2%                  446 MOGI-EP--230  3   -74.9    16.6    76.7
                                                 1.8%                 3447 MOGI-BAND-88  1   178.5    23.4   180.1                29
  448    1  0   1.019     0.0     0.0     0.0     0.0     0.0     0.0
 ITAPETI--230   -91.4     0.0     0.0     0.0     0.0     0.0     0.0
                                                49.5%                  446 MOGI-EP--230  1   134.0    74.4   150.4
                                                76.6%                  449 ITAPETI--345  1  -374.7  -110.2   383.1
                                                78.5%                  450 MOGI-Q---230  1   240.6    35.9   238.7
  449    1  0   1.038     0.0     0.0     0.0     0.0     0.0     0.0
 ITAPETI--345   -88.2     0.0     0.0     0.0     0.0     0.0     0.0
```

```
                                                   56.1%                 78 T.PRETO--345  1  -683.7   -89.7   664.3                01
                                                   56.1%                 78 T.PRETO--345  2  -683.7   -89.7   664.3                01
                                                   31.8%                127 MOG-RLC1-345  1   300.5     6.2   289.6                01
                                                   31.8%                128 MOG-RLC2-345  1   300.5     6.2   289.6                01
                                                   76.6%                448 ITAPETI--230  1   374.7   133.6   383.1 1.000F
                                                   21.1%                594 S.ANGELO-345  1   195.9    16.8   189.4                05
                                                   21.1%                594 S.ANGELO-345  2   195.9    16.8   189.4                05
  450    1  0   1.019     0.0     0.0     0.0     0.0     0.0     0.0
 MOGI-Q---230   -91.4     0.0     0.0     0.0     0.0     0.0     0.0
                                                    0.0%                161 MOGI-----230  1     0.0     0.0     0.0                01
                                                   78.5%                448 ITAPETI--230  1  -240.6   -35.8   238.7
                                                   90.1%                454 SAO JOSE-230  1   240.6    35.8   238.7
CEPEL - CENTRO DE PESQUISAS DE ENERGIA ELETRICA - PROGRAMA DE ANALISE DE REDES - V08MAR05A                                PAG.  90

ANUAL 06/07 * SETEMBRO 2006 PESADA S/SE 19H N/NE 19H * ANAT0 - FSE - C13
RELATORIO COMPLETO DO SISTEMA * AREA  4 * *         C T E E P - RSP          *

X----------------- D A D O S  -  B A R R A -------------------------X------------ F L U X O S  -  C I R C U I T O S ------------X
 DA BARRA      TENSAO GERACAO INJ EQV  CARGA   ELO CC  SHUNT    MOTOR
 NUM. KV TIPO   MOD/     MW/     MW/     MW/     MW/   Mvar/     MW/
     NOME       ANG     Mvar    Mvar    Mvar    Mvar   EQUIV    Mvar  PARA BARRA                    FLUXOS
                                                FLUXO % SHUNT L         NUM.     NOME     NC     MW    Mvar  MVA/V_d   TAP  DEFAS TIE
X------------X-------X-------X-------X-------X-------X-------X-------X----X------------X--X-------X-------X-------X------X-----X---X

  451  230  0   1.015     0.0     0.0     0.0     0.0     0.0     0.0
 AVillar-Y230   -91.3     0.0     0.0     0.0     0.0     0.0     0.0
                                                   41.0%                161 MOGI-----230  1   -55.8   113.6   124.6                01
                                                   36.3%                446 MOGI-EP--230  1    44.6  -102.8   110.3
                                                    0.2%               3446 MOGI-BAND230  1    11.2   -10.8    15.3                29
  454    1  0   0.984     0.0     0.0     0.0     0.0     0.0     0.0
 SAO JOSE-230   -98.1     0.0     0.0     0.0     0.0     0.0     0.0
                                                   79.5%                161 MOGI-----230  1  -237.8    -2.8   241.7                01
                                                   90.4%                450 MOGI-Q---230  1  -235.3   -15.5   239.6
                                                   77.2%                455 SAO JOSE-088  1   109.5    31.3   115.8 0.964*
                                                   77.6%                455 SAO JOSE-088  2   110.1    31.4   116.3 0.964*
                                                   76.4%                455 SAO JOSE-088  3   108.5    31.0   114.6 0.964*
                                                   79.5%                455 SAO JOSE-088  4   112.9    32.2   119.3 0.964*
                                                   59.4%                600 TAUBATE--230  1    32.1  -107.6   114.1                05
  455    1  0   1.000     0.0     0.0     0.0     0.0    62.9     0.0
 SAO JOSE-088  -103.1     0.0     0.0     0.0     0.0     0.0     0.0
                                                    0.2%                297 SBRANCA---88  1   -17.5     0.7    17.5                09
                                                    0.2%                297 SBRANCA---88  2   -17.5     0.7    17.5                09
                                                   74.4%                454 SAO JOSE-230  1  -109.5   -21.1   111.6
                                                   74.8%                454 SAO JOSE-230  2  -110.1   -21.2   112.2
                                                   73.7%                454 SAO JOSE-230  3  -108.5   -20.9   110.5
                                                   76.7%                454 SAO JOSE-230  4  -112.9   -21.7   115.0
                                                    9.7%                727 SJCAMP-Y1-88  1     4.8    -0.9     4.8                06
                                                   52.1%                728 SJCAMP-Y2-88  1   -19.5    17.2    26.0                06
                                                    5.1%               3455 SAO JOSE--88  1   490.7   130.1   507.9                29
  458    1  0   1.002     0.0     0.0     0.0     0.0     0.0     0.0
 APARECID-230  -104.0     0.0     0.0     0.0     0.0     0.0     0.0
                                                   52.0%                459 APARECID-088  1    30.6     6.4    31.2 1.013*
                                                   52.3%                459 APARECID-088  2    30.8     6.5    31.4 1.013*
                                                   52.3%                459 APARECID-088  3    30.8     6.5    31.4 1.013*
                                                   66.5%                461 S.CABECA-230  1   124.7   -28.7   127.7
                                                   81.7%                600 TAUBATE--230  1  -216.8     9.4   216.6                05
  459    1  0   0.978     0.0     0.0     0.0     0.0    20.1     0.0
 APARECID-088  -107.8     0.0     0.0     0.0     0.0     0.0     0.0
                                                   52.7%                458 APARECID-230  1   -30.6    -4.3    31.6
                                                   53.0%                458 APARECID-230  2   -30.8    -4.4    31.8
```

```
                                                 53.0%                 458 APARECID-230  3   -30.8    -4.4    31.8
                                                  1.0%                3459 APARECIDA-88  1    92.1    33.1   100.1                29
CEPEL - CENTRO DE PESQUISAS DE ENERGIA ELETRICA - PROGRAMA DE ANALISE DE REDES - V08MAR05A                                PAG.  91

ANUAL 06/07 * SETEMBRO 2006 PESADA S/SE 19H N/NE 19H * ANAT0 - FSE - C13
RELATORIO COMPLETO DO SISTEMA * AREA  4 * *         C T E E P - RSP          *

X----------------- D A D O S  -  B A R R A ------------------------X------------ F L U X O S  -  C I R C U I T O S ------------X
 DA BARRA      TENSAO GERACAO INJ EQV  CARGA   ELO CC  SHUNT    MOTOR
 NUM. KV TIPO   MOD/     MW/     MW/     MW/     MW/   Mvar/     MW/
     NOME       ANG     Mvar    Mvar    Mvar    Mvar   EQUIV    Mvar  PARA BARRA                    FLUXOS
                                                FLUXO % SHUNT L         NUM.     NOME     NC     MW     Mvar  MVA/V_d   TAP  DEFAS TIE
X------------X-------X-------X-------X-------X-------X-------X-------X----X------------X--X-------X-------X-------X------X-----X---X

  461    1  0   1.003     0.0     0.0     0.0     0.0     0.0     0.0
 S.CABECA-230  -106.3     0.0     0.0     0.0     0.0     0.0     0.0
                                                 21.4%                 252 N.PECANH-230  1    49.0   -38.7    62.2                09
                                                 65.9%                 458 APARECID-230  1  -123.7    28.8   126.6
                                                 55.8%                 462 S.CABECA--88  2    33.3     4.4    33.5 0.997*
                                                 69.4%                 462 S.CABECA--88  3    41.4     5.5    41.6 0.997*
  462    1  0   1.000     0.0     0.0     0.0     0.0     0.0     0.0
 S.CABECA--88  -110.2     0.0     0.0     0.0     0.0     0.0     0.0
                                                 55.6%                 461 S.CABECA-230  2   -33.3    -2.2    33.4
                                                 69.2%                 461 S.CABECA-230  3   -41.4    -2.7    41.5
                                                  0.7%                3462 S.CABECA--88  1    74.7     4.9    74.9                29
  464    1  0   1.038     0.0     0.0     0.0     0.0     0.0     0.0
 LESTE----345   -87.9     0.0     0.0     0.0     0.0     0.0     0.0
                                                 44.3%                  78 T.PRETO--345  1  -412.9   -76.1   404.4                01
                                                 44.8%                  78 T.PRETO--345  2  -417.3   -76.3   408.6                01
                                                 42.5%                  78 T.PRETO--345  3  -396.3   -71.1   387.8                01
                                                 60.0%                 465 LESTE----088  2   246.1    38.8   240.0 1.026*
                                                 59.6%                 465 LESTE----088  3   244.6    38.5   238.5 1.026*
                                                 60.4%                 465 LESTE----088  4   247.7    39.0   241.5 1.026*
                                                 20.1%                 466 RAMON RF-345  1   244.0    53.6   240.7
                                                 20.1%                 466 RAMON RF-345  2   244.0    53.6   240.7
  465    1  0   0.999     0.0     0.0     0.0     0.0   125.8     0.0
 LESTE----088   -96.8     0.0     0.0     0.0     0.0     0.0     0.0
                                                 61.6%                 464 LESTE----345  2  -246.1    -0.2   246.3
                                                 61.2%                 464 LESTE----345  3  -244.6    -0.2   244.8
                                                 62.0%                 464 LESTE----345  4  -247.7    -0.2   247.9
                                                  7.5%                3465 LESTE----088  1   738.4   126.6   749.7                28
  466    1  0   1.037     0.0     0.0     0.0     0.0     0.0     0.0
 RAMON RF-345   -88.1     0.0     0.0     0.0     0.0     0.0     0.0
                                                 20.2%                 464 LESTE----345  1  -243.9   -57.2   241.6
                                                 20.2%                 464 LESTE----345  2  -243.9   -57.2   241.6
                                                 40.0%                 467 RAMON R F-88  1   161.7    37.9   160.1 1.020*
                                                 40.6%                 467 RAMON R F-88  2   164.0    38.4   162.4 1.020*
                                                 40.2%                 467 RAMON R F-88  3   162.2    38.0   160.7 1.020*
  467    1  0   0.999     0.0     0.0     0.0     0.0    86.3     0.0
 RAMON R F-88   -93.2     0.0     0.0     0.0     0.0     0.0     0.0
                                                 40.8%                 466 RAMON RF-345  1  -161.7   -22.8   163.4
                                                 41.4%                 466 RAMON RF-345  2  -164.0   -23.2   165.7
                                                 41.0%                 466 RAMON RF-345  3  -162.2   -22.9   164.0
                                                  5.1%                3467 RAMON----088  1   487.9   155.2   512.3                28
CEPEL - CENTRO DE PESQUISAS DE ENERGIA ELETRICA - PROGRAMA DE ANALISE DE REDES - V08MAR05A                                PAG.  92

ANUAL 06/07 * SETEMBRO 2006 PESADA S/SE 19H N/NE 19H * ANAT0 - FSE - C13
RELATORIO COMPLETO DO SISTEMA * AREA  4 * *         C T E E P - RSP          *

X----------------- D A D O S  -  B A R R A ------------------------X------------ F L U X O S  -  C I R C U I T O S ------------X
```

```
 DA BARRA      TENSAO GERACAO INJ EQV  CARGA   ELO CC  SHUNT    MOTOR
 NUM. KV TIPO   MOD/     MW/     MW/     MW/     MW/   Mvar/     MW/
     NOME       ANG     Mvar    Mvar    Mvar    Mvar   EQUIV    Mvar  PARA BARRA                    FLUXOS
                                                FLUXO % SHUNT L         NUM.     NOME     NC     MW    Mvar  MVA/V_d   TAP  DEFAS TIE
X------------X-------X-------X-------X-------X-------X-------X-------X----X------------X--X-------X-------X-------X------X-----X---X

  471    1  0   1.029     0.0     0.0     0.0     0.0     0.0     0.0
 BAIXADA--345   -88.8     0.0     0.0     0.0     0.0     0.0     0.0
                                               55.8%                  78 T.PRETO--345  1  -659.2  -167.1   660.9                01
                                               59.2%                  78 T.PRETO--345  2  -700.5  -173.0   701.2                01
                                               76.9%                  78 T.PRETO--345  3  -700.5  -173.0   701.2                01
                                               45.2%                 472 BAIXADA--230  1   231.3    24.9   226.0 1.000F
                                               57.0%                 473 BAIXADA--088  1   234.6     7.8   228.1 1.022*
                                               56.5%                 473 BAIXADA--088  2   232.5     7.7   226.1 1.022*
                                               56.5%                 473 BAIXADA--088  3   232.5     7.7   226.1 1.022*
                                               89.3%                 474 SUL------345  1   783.2   297.5   814.3
                                               15.0%                 479 A.SERRA2-345  1   126.1   108.6   161.8
                                                2.2%                3471 BSA----345    1   220.0    58.9   221.4                42
  472  230  0   1.026     0.0     0.0     0.0     0.0     0.0     0.0
 BAIXADA--230   -90.8     0.0     0.0     0.0     0.0     0.0     0.0
                                               45.2%                 471 BAIXADA--345  1  -231.3   -16.7   226.0
                                               11.1%                 477 CARBOCL--230  1    68.6    10.0    67.5                41
                                                6.9%                 480 H.BORDEN-230  1    42.7     4.7    41.9                27
                                               39.0%                 732 TBAIXADA-138  1    60.0     1.1    58.5 0.986*         05
                                               39.0%                 732 TBAIXADA-138  2    60.0     1.1    58.5 0.986*         05
  473    1  0   1.010     0.0     0.0     0.0     0.0   128.6     0.0
 BAIXADA--088   -96.2     0.0     0.0     0.0     0.0     0.0     0.0
                                               36.7%                 470 CARBOCLORO88  1    87.5     0.7    86.6                42
                                               58.3%                 471 BAIXADA--345  1  -234.6    22.6   233.2
                                               57.8%                 471 BAIXADA--345  2  -232.5    22.4   231.2
                                               57.8%                 471 BAIXADA--345  3  -232.5    22.4   231.2
                                               75.1%                 481 H.BORDEN--88  1    89.3     5.6    88.6                27
                                               75.1%                 481 H.BORDEN--88  2    89.3     5.6    88.6                27
                                               77.4%                 481 H.BORDEN--88  6   107.3    12.1   106.9                27
                                               84.7%                3417 HBO-BSA56-88  5   117.0    15.6   116.8                42
                                                0.7%                3473 BAIXADA--088  1    67.9     3.4    67.3                28
                                                0.4%                3474 BSANT--088    1    42.6    14.0    44.4                42
                                               82.8%                3477 AGA+PETC--88  1    98.6     4.4    97.7                42
  474  345  0   1.001     0.0     0.0     0.0     0.0     0.0     0.0
 SUL------345   -92.0     0.0     0.0     0.0     0.0     0.0     0.0
                                               89.7%                 471 BAIXADA--345  1  -777.9  -257.3   818.2
                                               67.8%                 475 SUL1------88  1   260.3    77.3   271.1 0.990*
                                               68.0%                 475 SUL1------88  2   261.1    77.6   272.0 0.990*
                                               60.8%                 476 SUL2------88  3   235.4    62.2   243.1 0.999*
                                               62.2%                 476 SUL2------88  4   240.9    63.7   248.8 0.999*
                                               20.5%                 478 A.SERRA1-345  1  -219.8   -23.4   220.7
CEPEL - CENTRO DE PESQUISAS DE ENERGIA ELETRICA - PROGRAMA DE ANALISE DE REDES - V08MAR05A                                  PAG.  93

ANUAL 06/07 * SETEMBRO 2006 PESADA S/SE 19H N/NE 19H * ANAT0 - FSE - C13
RELATORIO COMPLETO DO SISTEMA * AREA  4 * *         C T E E P - RSP          *

X----------------- D A D O S  -  B A R R A -------------------------X------------ F L U X O S  -  C I R C U I T O S ------------X
 DA BARRA      TENSAO GERACAO INJ EQV  CARGA   ELO CC  SHUNT    MOTOR
 NUM. KV TIPO   MOD/     MW/     MW/     MW/     MW/   Mvar/     MW/
     NOME       ANG     Mvar    Mvar    Mvar    Mvar   EQUIV    Mvar  PARA BARRA                    FLUXOS
                                                FLUXO % SHUNT L         NUM.     NOME     NC     MW    Mvar  MVA/V_d   TAP  DEFAS TIE
X------------X-------X-------X-------X-------X-------X-------X-------X----X------------X--X-------X-------X-------X------X-----X---X

  475    1  0   0.976     0.0     0.0     0.0     0.0    60.1     0.0
 SUL1------88  -101.7     0.0     0.0     0.0     0.0     0.0     0.0
```

```
                                                  67.1%                474 SUL------345  1  -260.3   -31.5   268.5
                                                  67.3%                474 SUL------345  2  -261.1   -31.6   269.4
                                                   5.5%               3475 SUL1-----088  1   521.4   123.1   548.7                28
 476    1  0   0.976     0.0     0.0     0.0     0.0    60.1     0.0
SUL2------88  -100.0     0.0     0.0     0.0     0.0     0.0     0.0
                                                  60.7%                474 SUL------345  3  -235.4   -28.4   242.8
                                                  62.1%                474 SUL------345  4  -240.9   -29.0   248.5
                                                   5.0%               3476 SUL2-----088  1   476.3   117.5   502.4                28
 478    1  0   1.004     0.0     0.0     0.0     0.0     0.0     0.0
A.SERRA1-345   -91.3     0.0     0.0     0.0     0.0     0.0     0.0
                                                  20.4%                474 SUL------345  1   220.1    18.0   220.0
                                                  24.5%                582 EMBUGUAC-345  1  -220.1   -18.0   220.0                05
 479    1  0   1.026     0.0     0.0     0.0     0.0     0.0     0.0
A.SERRA2-345   -88.9     0.0     0.0     0.0     0.0     0.0     0.0
                                                  15.2%                471 BAIXADA--345  1  -126.1  -111.6   164.1
                                                  18.3%                582 EMBUGUAC-345  1   126.1   111.6   164.1                05
 484  230  0   0.999     0.0     0.0     0.0     0.0     0.0     0.0
PIRATINI-230   -90.9     0.0     0.0     0.0     0.0     0.0     0.0
                                                   4.4%                404 PIR-14.4-000  1    12.0     0.2    12.0 1.025F        27
                                                   0.0%                405 N.PIRAT1-000  1     0.0     0.0     0.0 1.000F        27
                                                  27.3%                480 H.BORDEN-230  1   -19.4   -83.2    85.4               27
                                                  89.9%                485 PIRATINI-088  5    83.5    33.1    89.9 0.996*
                                                  89.6%                485 PIRATINI-088  6    83.2    33.0    89.6 0.996*
                                                  88.9%                485 PIRATINI-088  7    82.6    32.8    88.9 0.996*
                                                  90.4%                485 PIRATINI-088  8    84.0    33.3    90.4 0.996*
                                                  43.1%                489 INTERL-1-230  1  -163.1   -24.6   165.0
                                                  43.0%                490 INTERL-2-230  1  -162.9   -24.6   164.8
 485    1  0   0.960     0.0     0.0     0.0     0.0    26.5     0.0
PIRATINI-088   -98.9     0.0     0.0     0.0     0.0     0.0     0.0
                                                   3.1%                403 PIR-13.8-000  1     6.0     0.0     6.3 1.025F        27
                                                   0.0%                406 N.PIRAT2-000  1     0.0     0.0     0.0 1.000F        27
                                                  89.5%                484 PIRATINI-230  5   -83.5   -20.2    89.5
                                                  89.2%                484 PIRATINI-230  6   -83.2   -20.2    89.2
                                                  88.6%                484 PIRATINI-230  7   -82.6   -20.0    88.6
                                                  90.0%                484 PIRATINI-230  8   -84.0   -20.3    90.0
                                                   3.6%               3485 PIRATINI-088  1   327.3   107.2   358.8                28
                                                   0.0%               3495 INTER PE-PIR  1     0.0     0.0     0.0                28
CEPEL - CENTRO DE PESQUISAS DE ENERGIA ELETRICA - PROGRAMA DE ANALISE DE REDES - V08MAR05A                              PAG.  94

ANUAL 06/07 * SETEMBRO 2006 PESADA S/SE 19H N/NE 19H * ANAT0 - FSE - C13
RELATORIO COMPLETO DO SISTEMA * AREA  4 * *         C T E E P - RSP          *

X----------------- D A D O S  -  B A R R A -------------------------X------------ F L U X O S  -  C I R C U I T O S ------------X
 DA BARRA      TENSAO GERACAO INJ EQV  CARGA   ELO CC  SHUNT    MOTOR
 NUM. KV TIPO   MOD/     MW/     MW/     MW/     MW/   Mvar/     MW/
     NOME       ANG     Mvar    Mvar    Mvar    Mvar   EQUIV    Mvar  PARA BARRA                    FLUXOS
                                                FLUXO % SHUNT L         NUM.     NOME     NC     MW    Mvar  MVA/V_d   TAP  DEFAS TIE
X------------X-------X-------X-------X-------X-------X-------X-------X----X------------X--X-------X-------X-------X------X-----X---X

 488  345  0   1.004     0.0     0.0     0.0     0.0     0.0     0.0
INTERL---345   -89.3     0.0     0.0     0.0     0.0     0.0     0.0
                                                  68.4%                 86 IBIUNA---345  1 -1380.0  -149.0  1382.0               01
                                                  68.4%                 86 IBIUNA---345  2 -1380.0  -149.0  1382.0               01
                                                  33.0%                489 INTERL-1-230  1   163.1    29.0   165.0 1.000F
                                                  33.0%                490 INTERL-2-230  1   162.9    28.9   164.8 1.000F
                                                  47.6%                491 XAVANTES-345  1  1126.2   195.0  1138.0
                                                  47.6%                491 XAVANTES-345  2  1125.5   200.7  1138.3
                                                  13.3%                582 EMBUGUAC-345  1    91.1   -77.8   119.3               05
                                                  13.3%                582 EMBUGUAC-345  2    91.1   -77.8   119.3               05
 489  230  0   1.000     0.0     0.0     0.0     0.0     0.0     0.0
```

```
 INTERL-1-230   -90.8     0.0     0.0     0.0     0.0     0.0     0.0
                                                43.1%                 484 PIRATINI-230  1   163.1    24.7   165.0
                                                33.0%                 488 INTERL---345  1  -163.1   -24.7   165.0
  490  230  0   1.000     0.0     0.0     0.0     0.0     0.0     0.0
 INTERL-2-230   -90.8     0.0     0.0     0.0     0.0     0.0     0.0
                                                43.0%                 484 PIRATINI-230  1   162.9    24.6   164.8
                                                33.0%                 488 INTERL---345  1  -162.9   -24.6   164.8
  491  345  0   0.999     0.0     0.0     0.0     0.0     0.0     0.0
 XAVANTES-345   -90.6     0.0     0.0     0.0     0.0     0.0     0.0
                                                47.7%                 488 INTERL---345  1 -1124.8  -174.6  1138.9
                                                47.7%                 488 INTERL---345  2 -1124.2  -180.3  1139.2
                                                74.1%                 492 BANDEIRA-345  1   370.4    -3.2   370.6
                                                74.1%                 492 BANDEIRA-345  2   370.4    -3.2   370.6
                                                74.1%                 492 BANDEIRA-345  3   370.4    -3.2   370.6
                                                50.0%                 495 M.FORNAS-345  1   568.9   182.2   597.7
                                                50.0%                 495 M.FORNAS-345  2   568.9   182.2   597.7
  492    1  0   0.998     0.0     0.0     0.0     0.0     0.0     0.0
 BANDEIRA-345   -91.0     0.0     0.0     0.0     0.0     0.0     0.0
                                                77.4%                 491 XAVANTES-345  1  -370.2  -110.8   387.2
                                                77.4%                 491 XAVANTES-345  2  -370.2  -110.8   387.2
                                                77.4%                 491 XAVANTES-345  3  -370.2  -110.8   387.2
                                                85.6%                 493 BANDEIRA-088  1   324.5   107.7   342.5 0.957*
                                                84.6%                 493 BANDEIRA-088  2   320.5   106.4   338.3 0.957*
                                                85.0%                 493 BANDEIRA-088  3   322.2   106.9   340.1 0.957*
                                                33.4%                 494 BANDEIR-34.5  1    49.8     4.0    50.0 0.995*
                                                33.7%                 494 BANDEIR-34.5  2    50.3     4.0    50.6 0.995*
                                                29.1%                 494 BANDEIR-34.5  3    43.5     3.5    43.7 0.995*
CEPEL - CENTRO DE PESQUISAS DE ENERGIA ELETRICA - PROGRAMA DE ANALISE DE REDES - V08MAR05A                          PAG.  95

ANUAL 06/07 * SETEMBRO 2006 PESADA S/SE 19H N/NE 19H * ANAT0 - FSE - C13
RELATORIO COMPLETO DO SISTEMA * AREA  4 * *         C T E E P - RSP          *

X----------------- D A D O S  -  B A R R A ------------------------X------------ F L U X O S  -  C I R C U I T O S ------------X
 DA BARRA      TENSAO GERACAO INJ EQV  CARGA   ELO CC  SHUNT    MOTOR
 NUM. KV TIPO   MOD/     MW/     MW/     MW/     MW/   Mvar/     MW/
     NOME       ANG     Mvar    Mvar    Mvar    Mvar   EQUIV    Mvar  PARA BARRA                    FLUXOS
                                                FLUXO % SHUNT L         NUM.     NOME     NC      MW     Mvar  MVA/V_d   TAP  DEFAS TIE
X------------X-------X-------X-------X-------X-------X-------X-------X----X------------X--X-------X-------X-------X------X-----X---X

  493    1  0   1.000     0.0     0.0     0.0     0.0   120.6     0.0
 BANDEIRA-088  -101.0     0.0     0.0     0.0     0.0     0.0     0.0
                                                82.0%                 492 BANDEIRA-345  1  -324.5   -47.5   328.0
                                                81.0%                 492 BANDEIRA-345  2  -320.5   -46.9   323.9
                                                81.4%                 492 BANDEIRA-345  3  -322.2   -47.1   325.6
                                                10.0%                3493 BANDEIRA-088  1   967.1   262.0  1002.1              28
  494    1  0   1.000     0.0     0.0     0.0     0.0    50.5     0.0
 BANDEIR-34.5   -95.0     0.0     0.0     0.0     0.0     0.0     0.0
                                                33.2%                 492 BANDEIRA-345  1   -49.8    -0.5    49.8
                                                33.5%                 492 BANDEIRA-345  2   -50.3    -0.5    50.3
                                                29.0%                 492 BANDEIRA-345  3   -43.5    -0.4    43.5
                                                 1.5%                3494 BANDEIRA-034  1   143.6    51.8   152.7              28
  495  345  0   0.987     0.0     0.0     0.0     0.0     0.0     0.0
 M.FORNAS-345   -92.7     0.0     0.0     0.0     0.0     0.0     0.0
                                                28.4%                 430 ANHANG---345  1   329.4    61.6   339.5
                                                 0.0%                 439 ANHANG---345  1     0.0     0.0     0.0
                                                50.2%                 491 XAVANTES-345  1  -568.2  -168.0   600.4
                                                50.2%                 491 XAVANTES-345  2  -568.2  -168.0   600.4
                                                72.2%                 496 M.FORNAS--88  1   269.8    91.8   288.8 0.950*
                                                71.7%                 496 M.FORNAS--88  2   267.9    91.1   286.7 0.950*
                                                72.1%                 496 M.FORNAS--88  3   269.3    91.6   288.2 0.950*
```

```
 496    1  0   1.000     0.0     0.0     0.0     0.0    86.4     0.0
M.FORNAS--88  -101.1     0.0     0.0     0.0     0.0     0.0     0.0
                                                68.6%                 495 M.FORNAS-345  1  -269.8   -49.6   274.3
                                                68.1%                 495 M.FORNAS-345  2  -267.9   -49.2   272.4
                                                68.5%                 495 M.FORNAS-345  3  -269.3   -49.5   273.9
                                                 8.4%                3496 MFORNAS--088  1   807.0   234.6   840.5              28


TOTAIS DA AREA  4

X--------X--------X--------X--------X--------X--------X--------X--------X
  GERACAO  INJ EQV   CARGA   ELO CC    SHUNT   EXPORT   IMPORT   PERDAS
    MW/      MW/      MW/      MW/     Mvar/     MW/      MW/      MW/
   Mvar     Mvar     Mvar     Mvar     EQUIV    Mvar     Mvar     Mvar
X--------X--------X--------X--------X--------X--------X--------X--------X

      0.0      0.0      0.0      0.0   1141.2  12002.4  12058.6     56.2
      0.0      0.0      0.0      0.0      0.0   2981.1   2186.8    346.9
CEPEL - CENTRO DE PESQUISAS DE ENERGIA ELETRICA - PROGRAMA DE ANALISE DE REDES - V08MAR05A                                PAG.  96

ANUAL 06/07 * SETEMBRO 2006 PESADA S/SE 19H N/NE 19H * ANAT0 - FSE - C13
RELATORIO COMPLETO DO SISTEMA * AREA  5 * *           C T E E P            *

X----------------- D A D O S  -  B A R R A -------------------------X------------ F L U X O S  -  C I R C U I T O S ------------X
 DA BARRA      TENSAO GERACAO INJ EQV  CARGA   ELO CC  SHUNT    MOTOR
 NUM. KV TIPO   MOD/     MW/     MW/     MW/     MW/   Mvar/     MW/
     NOME       ANG     Mvar    Mvar    Mvar    Mvar   EQUIV    Mvar  PARA BARRA                    FLUXOS
                                                FLUXO % SHUNT L         NUM.     NOME     NC     MW    Mvar  MVA/V_d   TAP  DEFAS TIE
X------------X-------X-------X-------X-------X-------X-------X-------X----X------------X--X-------X-------X-------X------X-----X---X

  532    1  1   1.020     0.0     0.0     0.0     0.0     0.0     0.0
 EMBU-GUA-1CS   -89.9   -11.3     0.0     0.0     0.0     0.0     0.0
                                                 4.4%                 581 EMBUGUAC-440  1     0.0   -11.3    11.0
  533    1  1   1.025     0.0     0.0     0.0     0.0     0.0     0.0
 S.ANGELO-1CS   -89.4   -27.4     0.0     0.0     0.0     0.0     0.0
                                                10.7%                 593 S.ANGELO-440  1     0.0   -27.4    26.7
  535  500  0   1.069     0.0     0.0     0.0     0.0     0.0     0.0
 AVERMELH-500   -71.9     0.0     0.0     0.0     0.0     0.0     0.0
                                                19.1%                 100 MARIMBON-500  1   298.5  -161.8   317.5              01
                                                17.6%                 370 SSIMAO---500  1   400.9  -102.7   387.0              02
                                                48.1%                 536 AVERMELH-440  1  -336.7   127.3   336.6
                                                48.4%                 536 AVERMELH-440  2  -362.7   137.2   362.7
  536  440  0   1.044     0.0     0.0     0.0     0.0     0.0     0.0
 AVERMELH-440   -69.3     0.0     0.0     0.0     0.0     0.0     0.0
                                                74.1%                 500 A.VERMEL-5GR  1 -1117.0   313.7  1111.5 1.000F        14
                                                48.5%                 535 AVERMELH-500  1   336.7  -110.0   339.3 0.992F
                                                48.7%                 535 AVERMELH-500  2   362.7  -118.5   365.6 0.992F
                                                37.6%                 537 AVERMELH-138  1   116.5    17.9   112.9
                                                42.1%                 538 ISOLTEIR-440  1  -668.4    51.2   642.1
                                                28.1%                 559 ARARAQUA-440  1   423.9  -141.8   428.2
                                                34.3%                 563 RIBPRETO-440  1   545.5   -12.6   522.7
  537  138  0   1.050     0.0     0.0     0.0     0.0     0.0     0.0
 AVERMELH-138   -72.2     0.0     0.0     0.0     0.0     0.0     0.0
                                                37.2%                 536 AVERMELH-440  1  -116.5   -12.0   111.6 1.012*
                                                22.8%                 649 JALES----138  1    18.7     4.1    18.2              06
                                                22.8%                 649 JALES----138  2    18.7     4.1    18.2              06
                                                26.5%                 674 VOTUPO-2-138  1    37.8     1.9    36.0              06
                                                27.7%                1901 CARDOSO1Y138  1    39.5     1.5    37.6              06
```

```
                                                  0.0%                 3881 A_VERMELH138  1     1.9     0.3     1.8                30
 538  440  0   1.039     0.0     0.0     0.0     0.0     0.0     0.0
ISOLTEIR-440   -60.2     0.0     0.0     0.0     0.0     0.0     0.0
                                                 85.2%                  501 I.SOLTE-18GR  1 -2930.8   678.2  2896.3 1.000F        08
                                                 43.1%                  536 AVERMELH-440  1   676.4   -92.7   657.3
                                                 19.2%                  542 3IRMAOS--440  1  -304.3    -7.5   293.1
                                                 42.5%                  559 ARARAQUA-440  1   657.3  -144.8   648.0
                                                 42.5%                  559 ARARAQUA-440  2   657.3  -144.8   648.0
                                                 40.3%                  561 BAURU----440  1   622.0  -144.2   614.8
                                                 40.3%                  561 BAURU----440  2   622.0  -144.2   614.8
CEPEL - CENTRO DE PESQUISAS DE ENERGIA ELETRICA - PROGRAMA DE ANALISE DE REDES - V08MAR05A                                PAG.  97

ANUAL 06/07 * SETEMBRO 2006 PESADA S/SE 19H N/NE 19H * ANAT0 - FSE - C13
RELATORIO COMPLETO DO SISTEMA * AREA  5 * *           C T E E P            *

X----------------- D A D O S  -  B A R R A ------------------------X------------ F L U X O S  -  C I R C U I T O S ------------X
 DA BARRA      TENSAO GERACAO INJ EQV  CARGA   ELO CC  SHUNT    MOTOR
 NUM. KV TIPO   MOD/     MW/     MW/     MW/     MW/   Mvar/     MW/
     NOME       ANG     Mvar    Mvar    Mvar    Mvar   EQUIV    Mvar  PARA BARRA                    FLUXOS
                                                FLUXO % SHUNT L        NUM.     NOME     NC     MW    Mvar  MVA/V_d   TAP  DEFAS TIE
X------------X-------X-------X-------X-------X-------X-------X-------X----X------------X--X-------X-------X-------X------X-----X---X

 539    1  0   1.037     0.0     0.0     0.0     0.0     0.0     0.0
JUPIA----440   -59.6     0.0     0.0     0.0     0.0     0.0     0.0
                                                 80.4%                  502 JUPIA---10GR  1 -1028.0   445.7  1080.7 1.000F        08
                                                 46.1%                  541 JUPIA----138  1   138.2   -37.7   138.2
                                                 12.1%                  542 3IRMAOS--440  1  -186.4   -41.0   184.1
                                                 16.4%                  547 TAQUARUC-440  1  -241.9   -95.0   250.6
                                                 42.6%                  561 BAURU----440  1   659.0  -136.0   649.0
                                                 42.6%                  561 BAURU----440  2   659.0  -136.0   649.0
 541  138  0   1.040     0.0     0.0     0.0     0.0     0.0     0.0
JUPIA----138   -62.9     0.0     0.0     0.0     0.0     0.0     0.0
                                                 73.7%                  503 JUPIA138-2GR  1  -171.0    16.1   165.2 1.025F        08
                                                 46.7%                  539 JUPIA----440  1  -138.2    46.3   140.2 0.986*
                                                  7.8%                  578 DERV_JUP_TRI  1    -4.2    -4.9     6.3               06
                                                 62.8%                  579 DERV_JUP_VAL  1    52.1     3.8    50.3               06
                                                 42.0%                 1135 AguaClar-138  1    47.5   -11.9    47.1               26
                                                 37.3%                 1144 Mimoso---138  2    45.5   -15.6    46.3               26
                                                 37.4%                 1144 Mimoso---138  3    45.7   -15.6    46.4               26
                                                 37.4%                 1144 Mimoso---138  4    45.7   -15.6    46.4               26
                                                  0.2%                 3892 JUPIA____138  1    16.1     3.7    15.9               30
                                                 14.3%                 4302 UTETLAG_138A  1    30.4    -3.1    29.4               41
                                                 14.3%                 4302 UTETLAG_138A  2    30.4    -3.1    29.4               41
 542    1  0   1.039     0.0     0.0     0.0     0.0     0.0     0.0
3IRMAOS--440   -58.9     0.0     0.0     0.0     0.0     0.0     0.0
                                                 74.1%                  520 T.IRMAOS-4GR  1  -646.0    26.9   622.2 1.000F        08
                                                 19.4%                  538 ISOLTEIR-440  1   304.8   -38.0   295.6
                                                 11.8%                  539 JUPIA----440  1   186.6    -3.9   179.6
                                                 49.8%                  543 3IRMAOS--138  1   154.6    15.0   149.5
 543    1  0   1.045     0.0     0.0     0.0     0.0     0.0     0.0
3IRMAOS--138   -62.6     0.0     0.0     0.0     0.0     0.0     0.0
                                                 49.3%                  542 3IRMAOS--440  1  -154.6    -5.0   148.0 1.009*
                                                 84.9%                  647 ISOLTEIRA138  1    70.8    -5.0    67.9               06
                                                 81.3%                 1900 ANDRAD-Y-138  1    67.5     8.0    65.0               06
                                                  9.9%                 1907 CASTILHOY138  1     7.7     2.9     7.9               06
                                                  0.0%                 3900 3IRMAOS__138  1     1.1     0.4     1.1               30
                                                  9.1%                 4302 UTETLAG_138A  1     7.5    -1.2     7.3               41
 544  440  0   1.045     0.0     0.0     0.0     0.0     0.0     0.0
PPRIMAV--440   -48.7     0.0     0.0     0.0     0.0     0.0     0.0
                                                 65.3%                  510 P.PRIMA-13GR  1 -1232.0   121.5  1184.6 1.000F        08
```

```
                                                 30.9%                547 TAQUARUC-440  1   616.0   -60.8   592.3
                                                 30.9%                547 TAQUARUC-440  2   616.0   -60.8   592.3
CEPEL - CENTRO DE PESQUISAS DE ENERGIA ELETRICA - PROGRAMA DE ANALISE DE REDES - V08MAR05A                          PAG.  98

ANUAL 06/07 * SETEMBRO 2006 PESADA S/SE 19H N/NE 19H * ANAT0 - FSE - C13
RELATORIO COMPLETO DO SISTEMA * AREA  5 * *           C T E E P            *

X----------------- D A D O S  -  B A R R A ------------------------X------------ F L U X O S  -  C I R C U I T O S ------------X
 DA BARRA      TENSAO GERACAO INJ EQV  CARGA   ELO CC  SHUNT    MOTOR
 NUM. KV TIPO   MOD/     MW/     MW/     MW/     MW/   Mvar/     MW/
     NOME       ANG     Mvar    Mvar    Mvar    Mvar   EQUIV    Mvar  PARA BARRA                    FLUXOS
                                                FLUXO % SHUNT L         NUM.     NOME     NC     MW     Mvar  MVA/V_d   TAP  DEFAS TIE
X------------X-------X-------X-------X-------X-------X-------X-------X----X------------X--X-------X-------X-------X------X-----X---X

  546  138  0   1.047     0.0     0.0     0.0     0.0     0.0     0.0
 ROSANA---138   -59.3     0.0     0.0     0.0     0.0     0.0     0.0
                                                76.4%                511 ROSANA---4GR  1  -297.5   -11.4   284.3 1.025F        15
                                                74.1%                657 PPRIMA-A-138  1    89.2    -3.1    85.2               06
                                                 8.5%                658 PPRIMA-B-138  1    10.1     1.8     9.8               06
                                                34.1%                659 PPRUDENTE138  1    34.3     1.6    32.8               06
                                                34.1%                659 PPRUDENTE138  2    34.3     1.6    32.8               06
                                                42.2%                865 Loanda---138  1   129.2     9.1   123.7               22
                                                 0.0%               3898 ROSANA___138  1     0.4     0.4     0.5               30
  547  440  0   1.043     0.0     0.0     0.0     0.0     0.0     0.0
 TAQUARUC-440   -55.0     0.0     0.0     0.0     0.0     0.0     0.0
                                                78.9%                513 TAQUARUC-5GR  1  -443.1   127.0   442.0 1.000F        15
                                                16.5%                539 JUPIA----440  1   243.3   -98.4   251.7
                                                30.5%                544 PPRIMAV--440  1  -610.8     9.7   585.8
                                                30.5%                544 PPRIMAV--440  2  -610.8     9.7   585.8
                                                40.1%                548 TAQUARUC-138  1   124.7    14.1   120.3
                                                32.6%                549 CAPIVARA-440  1   517.0   -28.5   496.5
                                                38.7%                552 ASSIS----440  1   779.7   -33.6   748.4
  548    1  0   1.040     0.0     0.0     0.0     0.0     0.0     0.0
 TAQUARUC-138   -58.1     0.0     0.0     0.0     0.0     0.0     0.0
                                                40.0%                547 TAQUARUC-440  1  -124.7    -7.4   120.1 1.002*
                                                56.6%                639 DRACENA--138  1    47.1    -2.0    45.3               06
                                                88.4%               3176 PVENCESL 138  1    73.1     7.8    70.7               35
                                                 0.0%               3899 TAQUARUC_138  1     4.5     1.6     4.6               30
  549  440  0   1.039     0.0     0.0     0.0     0.0     0.0     0.0
 CAPIVARA-440   -58.3     0.0     0.0     0.0     0.0     0.0     0.0
                                                69.3%                507 CAPIVARA-4GR  1  -511.7   -26.5   493.1 1.000F        15
                                                32.5%                547 TAQUARUC-440  1  -514.8   -14.6   495.6
                                                66.8%                550 CAPIVARA-138  1    93.8    45.0   100.1
                                                58.9%                552 ASSIS----440  1   932.7    -4.0   897.6
  550    1  0   1.040     0.0     0.0     0.0     0.0     0.0     0.0
 CAPIVARA-138   -63.9     0.0     0.0     0.0     0.0     0.0     0.0
                                                64.0%                549 CAPIVARA-440  1   -93.8   -34.2    96.1 1.043*
                                                55.7%                659 PPRUDENTE138  1    43.5    16.1    44.6               06
                                                63.8%               1911 PIRAPO-1Y138  1    49.9    18.0    51.0               06
                                                 0.0%               3884 CAPIVARA_138  1     0.5     0.1     0.5               30
  551  230  0   1.030     0.0     0.0     0.0     0.0     0.0     0.0
 ASSI-LON-230   -69.3     0.0     0.0     0.0     0.0     0.0     0.0
                                                 2.2%                553 ASSIS-MAR230  1  -147.8   -12.9   144.0
                                                77.1%                554 ASSIS-----88  1   -10.1    28.5    29.3               06
                                                77.1%                554 ASSIS-----88  2   -10.1    28.5    29.3               06
                                                62.2%                611 SALTGRD-Y230  1   201.5   -35.1   198.6
                                                 7.9%               1029 LondrinF-230  1   -33.6    -8.9    33.7               20
CEPEL - CENTRO DE PESQUISAS DE ENERGIA ELETRICA - PROGRAMA DE ANALISE DE REDES - V08MAR05A                          PAG.  99

ANUAL 06/07 * SETEMBRO 2006 PESADA S/SE 19H N/NE 19H * ANAT0 - FSE - C13
```

```
RELATORIO COMPLETO DO SISTEMA * AREA  5 * *            C T E E P            *

X----------------- D A D O S  -  B A R R A -------------------------X------------ F L U X O S  -  C I R C U I T O S ------------X
 DA BARRA      TENSAO GERACAO INJ EQV  CARGA   ELO CC  SHUNT    MOTOR
 NUM. KV TIPO   MOD/     MW/     MW/     MW/     MW/   Mvar/     MW/
     NOME       ANG     Mvar    Mvar    Mvar    Mvar   EQUIV    Mvar  PARA BARRA                    FLUXOS
                                                FLUXO % SHUNT L         NUM.     NOME     NC     MW    Mvar  MVA/V_d   TAP  DEFAS TIE
X------------X-------X-------X-------X-------X-------X-------X-------X----X------------X--X-------X-------X-------X------X-----X---X

  552  440  0   1.030     0.0     0.0     0.0     0.0     0.0     0.0
 ASSIS----440   -67.4     0.0     0.0     0.0     0.0     0.0     0.0                                   -95.6 SHL
                                                38.4%                    547 TAQUARUC-440  1  -765.6    13.0   743.1
                                                59.3%   -95.6            549 CAPIVARA-440  1  -921.3   137.2   904.0
                                                14.5%                    553 ASSIS-MAR230  1    50.2     3.2    48.8
                                                14.5%                    553 ASSIS-MAR230  2    50.2     3.2    48.8
                                                 6.5%                    556 ASSIS----525  1    89.5   -46.8    98.0
                                                49.4%                    561 BAURU----440  1   767.4  -118.2   753.5
                                                36.6%                    570 SUMARE---440  1   729.7     8.4   708.1
  553  230  0   1.030     0.0     0.0     0.0     0.0     0.0     0.0
 ASSIS-MAR230   -69.3     0.0     0.0     0.0     0.0     0.0     0.0
                                                 2.2%                    551 ASSI-LON-230  1   147.8    12.9   144.0
                                                14.5%                    552 ASSIS----440  1   -50.2    -1.5    48.8 1.001*
                                                14.5%                    552 ASSIS----440  2   -50.2    -1.5    48.8 1.001*
                                                14.9%                   1028 LondrinE-230  1   -47.4    -9.9    47.0              20
  555    1  0   1.048     0.0     0.0     0.0     0.0     0.0     0.0
 CANOAS-1--88   -63.7     0.0     0.0     0.0     0.0     0.0     0.0
                                                78.1%                    508 CANOAS-1-3GR  1   -66.5    17.5    65.6 1.039F       15
                                                69.1%                    554 ASSIS-----88  1    35.2   -11.1    35.2              06
                                                69.2%                   3197 C MOTA    88  1    31.3    -6.4    30.5              35
  556  525  0   1.034     0.0     0.0     0.0     0.0  -101.5     0.0
 ASSIS----525   -67.7     0.0     0.0     0.0     0.0     0.0     0.0
                                                36.6%                     99 ARARAQUA-525  1   738.9  -165.9   732.6              01
                                                 6.5%                    552 ASSIS----440  1   -89.5    47.5    98.0 1.000F
                                                31.4%                   1027 Londrina-525  1  -649.4    17.0   628.4              20
  557    1  0   1.048     0.0     0.0     0.0     0.0     0.0     0.0
 CANOAS-2--88   -66.2     0.0     0.0     0.0     0.0     0.0     0.0
                                                67.3%                    509 CANOAS-2-3GR  1   -57.6    13.8    56.5 1.039F       15
                                            SUP 101.6%                    613 SALTOGRD-088  1    44.9   -13.4    44.7
                                                27.6%                   3199 IBIRAREMA 88  1    12.7    -0.4    12.1              35
  559    1  0   1.042     0.0     0.0     0.0     0.0     0.0     0.0
 ARARAQUA-440   -81.3     0.0     0.0     0.0     0.0     0.0     0.0
                                                26.8%                    536 AVERMELH-440  1  -417.3   -86.1   409.0
                                                40.2%                    538 ISOLTEIR-440  1  -637.9   -30.6   612.9
                                                40.2%                    538 ISOLTEIR-440  2  -637.9   -30.6   612.9
                                                69.3%                    560 ARARAQUA-138  1   210.2    51.7   207.8
                                                71.8%                    560 ARARAQUA-138  2   217.9    53.6   215.4
                                                69.3%                    560 ARARAQUA-138  3   210.2    51.7   207.8
                                                41.3%                    561 BAURU----440  1  -459.1   -12.2   440.8
                                                35.4%                    565 MMIRIM-3-440  1   560.7   -42.9   539.7
                                                41.7%                    567 SBARBARA-440  1   632.2   198.3   635.9
                                                22.4%                    593 S.ANGELO-440  1   321.0  -153.0   341.3
CEPEL - CENTRO DE PESQUISAS DE ENERGIA ELETRICA - PROGRAMA DE ANALISE DE REDES - V08MAR05A                                   PAG. 100

ANUAL 06/07 * SETEMBRO 2006 PESADA S/SE 19H N/NE 19H * ANAT0 - FSE - C13
RELATORIO COMPLETO DO SISTEMA * AREA  5 * *            C T E E P            *

X----------------- D A D O S  -  B A R R A -------------------------X------------ F L U X O S  -  C I R C U I T O S ------------X
 DA BARRA      TENSAO GERACAO INJ EQV  CARGA   ELO CC  SHUNT    MOTOR
 NUM. KV TIPO   MOD/     MW/     MW/     MW/     MW/   Mvar/     MW/
     NOME       ANG     Mvar    Mvar    Mvar    Mvar   EQUIV    Mvar  PARA BARRA                    FLUXOS
```

```
                                                FLUXO % SHUNT L          NUM.     NOME     NC     MW    Mvar  MVA/V_d   TAP  DEFAS TIE
X------------X-------X-------X-------X-------X-------X-------X-------X----X------------X--X-------X-------X-------X------X-----X---X

  560  138  0   1.030     0.0     0.0     0.0     0.0     0.0     0.0
 ARARAQUA-138   -86.8     0.0     0.0     0.0     0.0     0.0     0.0
                                              68.8%                  559 ARARAQUA-440  1  -210.2   -30.9   206.3 1.007*
                                              71.3%                  559 ARARAQUA-440  2  -217.9   -32.0   213.8 1.007*
                                              68.8%                  559 ARARAQUA-440  3  -210.2   -30.9   206.3 1.007*
                                              96.3%                  703 SAOCARLOS138  1   107.0     3.6   104.0              06
                                              96.3%                  703 SAOCARLOS138  2   107.0     3.6   104.0              06
                                              63.1%                 2107 ARARA+CTR138  1    66.5     7.8    65.0              07
                                              45.6%                 2128 LAR+ES+IT138  1    58.2    15.1    58.4              07
                                              63.5%                 2132 PAIOL----138  1    82.6    13.6    81.3              07
                                              76.2%                 2132 PAIOL----138  2   142.5    38.5   143.3              07
                                              71.0%                 2142 UIRAPURU-138  1    74.4    11.6    73.1              07
  561  440  0   1.043     0.0     0.0     0.0     0.0     0.0     0.0
 BAURU----440   -77.2     0.0     0.0     0.0     0.0     0.0     0.0
                                              37.0%                  414 OESTE ---440  1   582.8   -84.8   564.6              04
                                              37.0%                  414 OESTE ---440  2   582.8   -84.8   564.6              04
                                              38.2%                  538 ISOLTEIR-440  1  -607.3   -28.0   582.7
                                              38.2%                  538 ISOLTEIR-440  2  -607.3   -28.0   582.7
                                              40.5%                  539 JUPIA----440  1  -643.2    -8.8   616.6
                                              40.5%                  539 JUPIA----440  2  -643.2    -8.8   616.6
                                              48.1%                  552 ASSIS----440  1  -757.3   107.5   733.2
                                              41.9%                  559 ARARAQUA-440  1   461.7   -66.1   447.0
                                              81.0%                  562 BAURU----138  1   110.5    62.1   121.5
                                              72.9%                  562 BAURU----138  2    99.4    55.9   109.4
                                              44.8%                  584 CABREUVA-440  1   710.6    41.9   682.3
                                              44.8%                  584 CABREUVA-440  2   710.6    41.9   682.3
  562    1  0   1.030     0.0     0.0     0.0     0.0     0.0     0.0
 BAURU----138   -82.2     0.0     0.0     0.0     0.0     0.0     0.0
                                              78.5%                  561 BAURU----440  1  -110.5   -49.9   117.7 1.032*
                                              70.6%                  561 BAURU----440  2   -99.4   -44.9   105.9 1.032*
                                              25.4%                  633 BARIRI---138  1   -19.9     6.3    20.3              06
                                              25.4%                  633 BARIRI---138  2   -19.9     6.3    20.3              06
                                              73.4%                 2147 BAURU----138  1   103.0    33.1   105.0              07
                                              52.5%                 2174 TR.BRANCA138  1    73.4    24.6    75.1              07
                                              52.5%                 2174 TR.BRANCA138  2    73.4    24.6    75.1              07
  563    1  0   0.983     0.0     0.0     0.0     0.0     0.0     0.0
 RIBPRETO-440   -86.4     0.0     0.0     0.0     0.0     0.0     0.0
                                              36.7%                  536 AVERMELH-440  1  -533.4  -133.9   559.5
                                              69.6%                  564 RIBPRETO-138  1   177.7   102.9   208.9
                                              70.8%                  564 RIBPRETO-138  2   180.8   104.6   212.5
                                              12.7%                  567 SBARBARA-440  1   174.9   -73.6   193.0
CEPEL - CENTRO DE PESQUISAS DE ENERGIA ELETRICA - PROGRAMA DE ANALISE DE REDES - V08MAR05A                                PAG. 101

ANUAL 06/07 * SETEMBRO 2006 PESADA S/SE 19H N/NE 19H * ANAT0 - FSE - C13
RELATORIO COMPLETO DO SISTEMA * AREA  5 * *           C T E E P            *

X----------------- D A D O S  -  B A R R A ------------------------X------------ F L U X O S  -  C I R C U I T O S ------------X
 DA BARRA      TENSAO GERACAO INJ EQV  CARGA   ELO CC  SHUNT    MOTOR
 NUM. KV TIPO   MOD/     MW/     MW/     MW/     MW/   Mvar/     MW/
     NOME       ANG     Mvar    Mvar    Mvar    Mvar   EQUIV    Mvar  PARA BARRA                    FLUXOS
                                              FLUXO % SHUNT L          NUM.     NOME     NC     MW    Mvar  MVA/V_d   TAP  DEFAS TIE
X------------X-------X-------X-------X-------X-------X-------X-------X----X------------X--X-------X-------X-------X------X-----X---X

  564    1  0   1.020     0.0     0.0     0.0     0.0     0.0     0.0
 RIBPRETO-138   -91.6     0.0     0.0     0.0     0.0     0.0     0.0
                                              64.0%                  563 RIBPRETO-440  1  -177.7   -82.3   192.0 1.088*
                                              65.1%                  563 RIBPRETO-440  2  -180.8   -83.7   195.3 1.088*
```

```
                                                 31.9%                 699 PFERREIRA138  1    35.1    -2.3    34.4                06
                                                 39.6%                2004 SRPASS4YA138  1    38.7    -2.1    38.0                06
                                                 33.3%                2263 CRAVINHOS138  1    34.9     2.0    34.3                07
                                                 31.7%                2268 IGUAPE---138  1    41.6    44.4    59.6                07
                                                 31.7%                2268 IGUAPE---138  2    41.6    44.4    59.6                07
                                                 49.2%                2274 LEAO.XIII138  1    85.1    41.0    92.6                07
                                                 47.0%                2277 MORROCIPO138  1    81.5    38.7    88.4                07
  565    1  0   1.028     0.0     0.0     0.0     0.0     0.0     0.0
 MMIRIM-3-440   -89.3     0.0     0.0     0.0     0.0     0.0     0.0
                                                 35.6%                 559 ARARAQUA-440  1  -554.6   -62.6   543.0
                                                 62.0%                 566 MMIRIM-3-138  1   181.0    61.5   186.0
                                                 64.5%                 566 MMIRIM-3-138  2   188.4    64.0   193.6
                                                 62.0%                 566 MMIRIM-3-138  3   181.0    61.5   186.0
                                                  7.9%                 593 S.ANGELO-440  1     4.2  -124.4   121.1
  566  138  0   1.035     0.0     0.0     0.0     0.0     0.0     0.0
 MMIRIM-3-138   -93.9     0.0     0.0     0.0     0.0     0.0     0.0
                                                 60.1%                 565 MMIRIM-3-440  1  -181.0   -45.5   180.3 1.032*
                                                 62.5%                 565 MMIRIM-3-440  2  -188.4   -47.3   187.6 1.032*
                                                 60.1%                 565 MMIRIM-3-440  3  -181.0   -45.5   180.3 1.032*
                                                 57.2%                 692 LIMEIR-1-138  1    46.6     9.0    45.8                06
                                                 60.3%                 695 MGUACU---138  1    85.8    24.5    86.2                06
                                                 60.3%                 695 MGUACU---138  2    85.8    24.5    86.2                06
                                                 83.6%                 696 MMIRIM-2-138  1   112.9    26.5   112.0                06
                                                 83.6%                 696 MMIRIM-2-138  2   112.9    26.5   112.0                06
                                                 13.8%                 705 SJBVIS-2-138  1    13.4     3.6    13.4                06
                                                 73.5%                1947 CONCHALY-138  1    59.6    12.5    58.8                06
                                                 35.2%                1955 MAHLE-Y--138  1    33.5    11.1    34.1                06
  567  440  0   0.979     0.0     0.0     0.0     0.0     0.0     0.0
 SBARBARA-440   -89.5     0.0     0.0     0.0     0.0     0.0     0.0
                                                 44.6%                 559 ARARAQUA-440  1  -624.4  -232.3   680.4
                                                 12.7%                 563 RIBPRETO-440  1  -174.2   -74.0   193.3
                                                 92.2%                 568 S.BARB-2-138  2   238.1   155.7   290.6
                                            SUP 101.7%                 568 S.BARB-2-138  3   249.9   163.4   305.0
                                                 62.8%                 569 S.BARB-1-138  1   187.8    47.4   197.9
                                                  9.2%                 570 SUMARE---440  1   122.7   -60.2   139.6
CEPEL - CENTRO DE PESQUISAS DE ENERGIA ELETRICA - PROGRAMA DE ANALISE DE REDES - V08MAR05A                                PAG. 102

ANUAL 06/07 * SETEMBRO 2006 PESADA S/SE 19H N/NE 19H * ANAT0 - FSE - C13
RELATORIO COMPLETO DO SISTEMA * AREA  5 * *           C T E E P            *

X----------------- D A D O S  -  B A R R A -------------------------X------------ F L U X O S  -  C I R C U I T O S ------------X
 DA BARRA      TENSAO GERACAO INJ EQV  CARGA   ELO CC  SHUNT    MOTOR
 NUM. KV TIPO   MOD/     MW/     MW/     MW/     MW/   Mvar/     MW/
     NOME       ANG     Mvar    Mvar    Mvar    Mvar   EQUIV    Mvar  PARA BARRA                  FLUXOS
                                                FLUXO % SHUNT L         NUM.     NOME     NC     MW    Mvar  MVA/V_d   TAP  DEFAS TIE
X------------X-------X-------X-------X-------X-------X-------X-------X----X------------X--X-------X-------X-------X------X-----X---X

  568    1  0   1.020     0.0     0.0     0.0     0.0     0.0     0.0
 S.BARB-2-138   -96.7     0.0     0.0     0.0     0.0     0.0     0.0
                                                 82.5%                 567 SBARBARA-440  2  -238.1  -116.4   260.0 1.118*
                                                 91.0%                 567 SBARBARA-440  3  -249.9  -122.2   272.9 1.118*
                                                 42.9%                2122 ESMERALD-138  1    66.9    34.5    73.8                07
                                                 22.9%                2145 CILLOS---138  1    38.9    20.2    43.0                07
                                                 67.7%                2185 BARBARENS138  1    64.4    30.1    69.7                07
                                                 36.2%                2191 CARIOBA--138  1    36.4    26.0    43.9                07
                                                 36.2%                2191 CARIOBA--138  2    36.4    26.0    43.9                07
                                                 22.0%                2191 CARIOBA--138  3    38.4    17.3    41.3                07
                                                 42.1%                2212 JARDIM---138  1    47.6    20.9    51.0                07
                                                 56.4%                2224 PIRACICAB138  1    54.9    22.2    58.0                07
                                                 56.4%                2224 PIRACICAB138  2    54.9    22.2    58.0                07
```

```
                                                 50.5%                 2294 STA.CECIL138  1    49.4    19.2    52.0                07
 569    1  0   1.019     0.0     0.0     0.0     0.0     0.0     0.0
S.BARB-1-138   -94.9     0.0     0.0     0.0     0.0     0.0     0.0
                                                 59.2%                  567 SBARBARA-440  1  -187.8   -29.2   186.5 1.061*
                                                 39.3%                  692 LIMEIR-1-138  1    37.9     6.5    37.7               06
                                                  9.6%                  696 MMIRIM-2-138  1     8.6    -4.1     9.3               06
                                                 67.4%                 1977 LIMEIR-3Y138  1    65.4     8.8    64.7               06
                                                 79.0%                 1998 RIPASA-Y-138  1    76.0    18.1    76.7               06
 570  440  0   0.980     0.0     0.0     0.0     0.0     0.0     0.0
SUMARE---440   -89.8     0.0     0.0     0.0     0.0     0.0     0.0
                                                 37.3%                  552 ASSIS----440  1  -705.8   -42.6   721.2
                                                  8.7%                  567 SBARBARA-440  1  -122.6    42.4   132.3
                                                 74.2%                  571 SUMARE---138  1   189.3   108.7   222.6
                                                 74.2%                  571 SUMARE---138  2   189.3   108.7   222.6
                                                 33.4%                  574 B.JARDIM-440  1   449.8  -217.1   509.5
 571    1  0   1.030     0.0     0.0     0.0     0.0     0.0     0.0
SUMARE---138   -95.5     0.0     0.0     0.0     0.0     0.0     0.0
                                                 67.2%                  570 SUMARE---440  1  -189.3   -85.0   201.5 1.105*
                                                 67.2%                  570 SUMARE---440  2  -189.3   -85.0   201.5 1.105*
                                                 39.4%                 2215 MONTEMOR-138  1    71.3    27.1    74.1               07
                                                 66.0%                 2219 NOV.APARE138  1   116.2    53.2   124.1               07
                                                 66.0%                 2219 NOV.APARE138  2   116.2    53.2   124.1               07
                                                 43.0%                 2307 HORTOLAND138  1    75.0    36.4    80.9               07
CEPEL - CENTRO DE PESQUISAS DE ENERGIA ELETRICA - PROGRAMA DE ANALISE DE REDES - V08MAR05A                                PAG. 103

ANUAL 06/07 * SETEMBRO 2006 PESADA S/SE 19H N/NE 19H * ANAT0 - FSE - C13
RELATORIO COMPLETO DO SISTEMA * AREA  5 * *           C T E E P            *

X----------------- D A D O S  -  B A R R A ------------------------X------------ F L U X O S  -  C I R C U I T O S ------------X
 DA BARRA      TENSAO GERACAO INJ EQV  CARGA   ELO CC  SHUNT    MOTOR
 NUM. KV TIPO   MOD/     MW/     MW/     MW/     MW/   Mvar/     MW/
     NOME       ANG     Mvar    Mvar    Mvar    Mvar   EQUIV    Mvar  PARA BARRA                    FLUXOS
                                                FLUXO % SHUNT L         NUM.     NOME     NC     MW    Mvar  MVA/V_d   TAP  DEFAS TIE
X------------X-------X-------X-------X-------X-------X-------X-------X----X------------X--X-------X-------X-------X------X-----X---X

 574  440  0   0.994     0.0     0.0     0.0     0.0     0.0     0.0
B.JARDIM-440   -92.0     0.0     0.0     0.0     0.0     0.0     0.0
                                                 32.2%                  570 SUMARE---440  1  -448.3   192.5   490.7
                                                 92.7%                  575 B.JARDIM-138  1   112.5    80.4   139.0
                                                 61.6%                  576 B.JARDIM-088  1   173.4    60.9   184.8
                                                 63.5%                  576 B.JARDIM-088  2   178.7    62.7   190.5
                                                 63.1%                  576 B.JARDIM-088  3   177.6    62.3   189.3
                                                  5.4%                  584 CABREUVA-440  1   -70.8    39.9    81.7
                                                 22.9%                  593 S.ANGELO-440  1  -252.2  -238.8   349.4
                                                 19.1%                  599 TAUBATE--440  1   129.2  -259.7   291.8
 575    1  0   1.044     0.0     0.0     0.0     0.0     0.0     0.0
B.JARDIM-138   -98.8     0.0     0.0     0.0     0.0     0.0     0.0
                                                 81.9%                  574 B.JARDIM-440  1  -112.5   -61.7   122.9 1.131*
                                                 42.7%                 1972 JARINU-Y-138  1    56.1    30.4    61.1               06
                                                 41.2%                 3418 PROGAMBLE138  1    56.4    31.3    61.8               42
 576    1  0   1.000     0.0     0.0     0.0     0.0     0.0     0.0
B.JARDIM-088   -96.8     0.0     0.0     0.0     0.0     0.0     0.0
                                                 59.7%                  574 B.JARDIM-440  1  -173.4   -44.9   179.1 1.032*
                                                 61.6%                  574 B.JARDIM-440  2  -178.7   -46.3   184.7 1.032*
                                                 61.2%                  574 B.JARDIM-440  3  -177.6   -46.0   183.5 1.032*
                                                 42.5%                 3413 B.JARDIM-088  1    97.0    36.6   103.7               28
                                                 74.1%                 3414 BJA----088    1   432.7   100.6   444.3               42
 581    1  0   1.024     0.0     0.0     0.0     0.0     0.0     0.0
EMBUGUAC-440   -89.9     0.0     0.0     0.0     0.0     0.0     0.0
                                                 16.2%                  414 OESTE ---440  1  -235.8   -90.1   246.5               04
```

```
                                                  16.2%                414 OESTE ---440  2  -235.8   -90.1   246.5                04
                                                   4.4%                532 EMBU-GUA-1CS  1     0.0    11.3    11.0 1.000F
                                                   5.7%                582 EMBUGUAC-345  1   -43.4     1.5    42.4
                                                   5.7%                582 EMBUGUAC-345  2   -43.4     1.5    42.4
                                                  56.8%                583 EMBUGUAC-138  1   170.1    38.6   170.3
                                                  57.6%                583 EMBUGUAC-138  2   172.7    39.2   172.9
                                                  23.7%                585 DGERDAU--440  1   303.0   211.2   360.7
                                                   9.7%                593 S.ANGELO-440  1   -87.5  -123.3   147.6
  582    1  0   1.009     0.0     0.0     0.0     0.0     0.0     0.0
 EMBUGUAC-345   -89.7     0.0     0.0     0.0     0.0     0.0     0.0
                                                  24.4%                478 A.SERRA1-345  1   220.9     1.2   219.0                04
                                                  20.1%                479 A.SERRA2-345  1  -125.6  -131.3   180.1                04
                                                  12.5%                488 INTERL---345  1   -91.0    66.4   111.7                04
                                                  12.5%                488 INTERL---345  2   -91.0    66.4   111.7                04
                                                   5.7%                581 EMBUGUAC-440  1    43.4    -1.4    43.0 0.985F
                                                   5.7%                581 EMBUGUAC-440  2    43.4    -1.4    43.0 0.985F
CEPEL - CENTRO DE PESQUISAS DE ENERGIA ELETRICA - PROGRAMA DE ANALISE DE REDES - V08MAR05A                              PAG. 104

ANUAL 06/07 * SETEMBRO 2006 PESADA S/SE 19H N/NE 19H * ANAT0 - FSE - C13
RELATORIO COMPLETO DO SISTEMA * AREA  5 * *           C T E E P            *

X----------------- D A D O S  -  B A R R A -------------------------X------------ F L U X O S  -  C I R C U I T O S ------------X
 DA BARRA      TENSAO GERACAO INJ EQV  CARGA   ELO CC  SHUNT    MOTOR
 NUM. KV TIPO   MOD/     MW/     MW/     MW/     MW/   Mvar/     MW/
     NOME       ANG     Mvar    Mvar    Mvar    Mvar   EQUIV    Mvar  PARA BARRA                    FLUXOS
                                                FLUXO % SHUNT L         NUM.     NOME     NC     MW    Mvar  MVA/V_d   TAP  DEFAS TIE
X------------X-------X-------X-------X-------X-------X-------X-------X----X------------X--X-------X-------X-------X------X-----X---X

  583    1  0   1.050     0.0     0.0     0.0     0.0     0.0     0.0
 EMBUGUAC-138   -94.3     0.0     0.0     0.0     0.0     0.0     0.0
                                                  54.6%                581 EMBUGUAC-440  1  -170.1   -25.1   163.8 1.040*
                                                  55.4%                581 EMBUGUAC-440  2  -172.7   -25.5   166.3 1.040*
                                                  71.1%                739 PARELHEIY138  1    71.6     1.0    68.2                06
                                                  44.8%                746 PERUIBE--138  1    41.8   -17.1    43.0                06
                                                   2.3%               3583 EMBUGUAC-138  1   229.4    66.7   227.5                28
  584    1  0   0.993     0.0     0.0     0.0     0.0     0.0     0.0
 CABREUVA-440   -91.8     0.0     0.0     0.0     0.0     0.0     0.0
                                                  46.6%                561 BAURU----440  1  -695.8  -108.0   709.4
                                                  46.6%                561 BAURU----440  2  -695.8  -108.0   709.4
                                                   6.3%                574 B.JARDIM-440  1    70.8   -63.0    95.5
                                                  25.7%                585 DGERDAU--440  1  -285.7  -263.1   391.3
                                                  69.0%                590 CABREUVA-230  1   487.5   161.4   517.3
                                                  69.9%                590 CABREUVA-230  2   494.0   163.6   524.3
                                                  69.0%                590 CABREUVA-230  3   487.5   161.4   517.3
                                                  99.7%                591 CABREUVA-138  1   137.6    55.7   149.6
  585    1  0   1.001     0.0     0.0     0.0     0.0     0.0     0.0
 DGERDAU--440   -91.4     0.0     0.0     0.0     0.0     0.0     0.0
                                                  25.9%                581 EMBUGUAC-440  1  -302.0  -254.9   394.9
                                                  24.9%                584 CABREUVA-440  1   286.0   249.6   379.3
                                                   0.2%               4585 GERDAU---440  1    16.0     5.3    16.8                41
  590    1  0   1.025     0.0     0.0     0.0     0.0     0.0     0.0
 CABREUVA-230   -94.0     0.0     0.0     0.0     0.0     0.0     0.0
                                                  55.3%                410 E.SOUZA--230  2   211.9    47.7   211.9                04
                                                  55.3%                410 E.SOUZA--230  4   211.9    47.7   211.9                04
                                                  55.3%                412 E.Souza---88  1   212.0    47.7   212.0                04
                                                  55.3%                412 E.Souza---88  3   212.0    47.7   212.0                04
                                                  66.0%                584 CABREUVA-440  1  -487.5  -141.3   495.1 1.045F
                                                  66.9%                584 CABREUVA-440  2  -494.0  -143.2   501.7 1.045F
                                                  66.0%                584 CABREUVA-440  3  -487.5  -141.3   495.1 1.045F
                                                  56.1%                606 CBA------230  1   310.6   117.5   323.9                08
```

```
                                                  56.1%                 606 CBA------230  2   310.6   117.5   323.9                08
 591    1  0   1.050     0.0     0.0     0.0     0.0     0.0     0.0
CABREUVA-138   -98.7     0.0     0.0     0.0     0.0     0.0     0.0
                                                  90.5%                 584 CABREUVA-440  1  -137.6   -37.2   135.8 1.101*
                                                  40.8%                 694 MAIRIPORA138  1    39.0    13.0    39.2               06
                                                  74.2%                1361 CAV2--Y--138  1    75.0    20.7    74.2               06
                                                   0.1%                3848 CABREUVA_138  1    11.8     1.9    11.4               30
                                                   8.9%                3871 CABREU_2_138  1    11.8     1.5    11.3               30
CEPEL - CENTRO DE PESQUISAS DE ENERGIA ELETRICA - PROGRAMA DE ANALISE DE REDES - V08MAR05A                                PAG. 105

ANUAL 06/07 * SETEMBRO 2006 PESADA S/SE 19H N/NE 19H * ANAT0 - FSE - C13
RELATORIO COMPLETO DO SISTEMA * AREA  5 * *           C T E E P            *

X----------------- D A D O S  -  B A R R A ------------------------X------------ F L U X O S  -  C I R C U I T O S ------------X
 DA BARRA      TENSAO GERACAO INJ EQV  CARGA   ELO CC  SHUNT    MOTOR
 NUM. KV TIPO   MOD/     MW/     MW/     MW/     MW/   Mvar/     MW/
     NOME       ANG     Mvar    Mvar    Mvar    Mvar   EQUIV    Mvar  PARA BARRA                    FLUXOS
                                                FLUXO % SHUNT L        NUM.     NOME     NC     MW    Mvar  MVA/V_d   TAP  DEFAS TIE
X------------X-------X-------X-------X-------X-------X-------X-------X----X------------X--X-------X-------X-------X------X-----X---X

 593    1  0   1.035     0.0     0.0     0.0     0.0     0.0     0.0
S.ANGELO-440   -89.4     0.0     0.0     0.0     0.0     0.0     0.0
                                                  10.7%                 533 S.ANGELO-1CS  1     0.0    27.7    26.7 1.000F
                                                  21.7%                 559 ARARAQUA-440  1  -317.3  -129.5   331.1
                                                   4.6%                 565 MMIRIM-3-440  1    -4.1   -72.8    70.4
                                                  18.2%                 574 B.JARDIM-440  1   253.7   135.7   278.0
                                                   6.3%                 581 EMBUGUAC-440  1    87.7    47.0    96.1
                                                  25.4%                 594 S.ANGELO-345  1  -195.7   -20.4   190.1
                                                  25.4%                 594 S.ANGELO-345  2  -195.7   -20.4   190.1
                                                  60.2%                 595 S.ANGELO-138  1   186.2    16.4   180.6
                                                  61.4%                 595 S.ANGELO-138  2    95.0     8.4    92.2
                                                  58.5%                 595 S.ANGELO-138  3    90.4     7.9    87.7
 594    1  0   1.037     0.0     0.0     0.0     0.0     0.0     0.0
S.ANGELO-345   -88.6     0.0     0.0     0.0     0.0     0.0     0.0
                                                  21.2%                 449 ITAPETI--345  1  -195.7   -23.0   190.1               04
                                                  21.2%                 449 ITAPETI--345  2  -195.7   -23.0   190.1               04
                                                  25.4%                 593 S.ANGELO-440  1   195.7    23.0   190.1 1.000F
                                                  25.4%                 593 S.ANGELO-440  2   195.7    23.0   190.1 1.000F
 595    1  0   1.051     0.0     0.0     0.0     0.0     0.0     0.0
S.ANGELO-138   -94.0     0.0     0.0     0.0     0.0     0.0     0.0
                                                  59.1%                 593 S.ANGELO-440  1  -186.2    -1.1   177.3 1.019*
                                                  60.3%                 593 S.ANGELO-440  2   -95.0    -0.5    90.5 1.019*
                                                  57.4%                 593 S.ANGELO-440  3   -90.4    -0.5    86.1 1.019*
                                                  87.2%                 676 MANUELAPY138  1   127.0     8.5   121.2               06
                                                  65.3%                 694 MAIRIPORA138  1    95.3    -1.2    90.8               06
                                                  50.0%                 708 PETROM-Y-138  1    50.5    -0.4    48.0               06
                                                  31.7%                 709 BERTIO-2-138  1    32.0     0.4    30.5               06
                                                  33.7%                 725 RIOPARDO-138  1    33.4    -6.3    32.3               06
                                                  33.2%                 726 SIFAO 22Y138  1    33.4     1.0    31.8               06
 598    1  0   1.071     0.0     0.0     0.0     0.0     0.0     0.0
TAUBATE--500   -91.9     0.0     0.0     0.0     0.0     0.0     0.0
                                                  58.0%                  77 T.PRETO--500  1 -1032.9   -24.2   965.2               01
                                                  38.7%                 104 C.PAULIS-500  1   640.1  -257.7   644.6               01
                                                  50.2%                 599 TAUBATE--440  1   392.8   281.9   451.6
 599    1  0   1.040     0.0     0.0     0.0     0.0     0.0     0.0
TAUBATE--440   -94.0     0.0     0.0     0.0     0.0     0.0     0.0
                                                  10.9%                 574 B.JARDIM-440  1  -128.2   115.6   166.0
                                                  50.4%                 598 TAUBATE--500  1  -392.8  -260.9   453.4 0.996F
                                                  66.8%                 600 TAUBATE--230  1   189.2   129.6   220.5
                                                  50.5%                 601 TAUBATE--138  1   165.4     7.8   159.2
```

```
                                                 50.9%                 601 TAUBATE--138  2   166.4     7.8   160.2
CEPEL - CENTRO DE PESQUISAS DE ENERGIA ELETRICA - PROGRAMA DE ANALISE DE REDES - V08MAR05A                                PAG. 106

ANUAL 06/07 * SETEMBRO 2006 PESADA S/SE 19H N/NE 19H * ANAT0 - FSE - C13
RELATORIO COMPLETO DO SISTEMA * AREA  5 * *           C T E E P            *

X----------------- D A D O S  -  B A R R A -------------------------X------------ F L U X O S  -  C I R C U I T O S ------------X
 DA BARRA      TENSAO GERACAO INJ EQV  CARGA   ELO CC  SHUNT    MOTOR
 NUM. KV TIPO   MOD/     MW/     MW/    MW/    MW/   Mvar/     MW/
     NOME       ANG     Mvar    Mvar   Mvar   Mvar   EQUIV    Mvar  PARA BARRA                    FLUXOS
                                                FLUXO % SHUNT L         NUM.     NOME     NC     MW    Mvar  MVA/V_d   TAP  DEFAS TIE
X------------X-------X-------X-------X-------X-------X-------X-------X----X------------X--X-------X-------X-------X------X-----X---X

  600    1  0   1.018     0.0     0.0     0.0     0.0     0.0     0.0
 TAUBATE--230   -99.1     0.0     0.0     0.0     0.0     0.0     0.0
                                                55.2%                 454 SAO JOSE-230  1   -31.3   103.3   106.0                04
                                                81.8%                 458 APARECID-230  1   220.5     3.2   216.7                04
                                                64.6%                 599 TAUBATE--440  1  -189.2  -106.4   213.3 1.034F
  601    1  0   1.018     0.0     0.0     0.0     0.0     0.0     0.0
 TAUBATE--138   -98.1     0.0     0.0     0.0     0.0     0.0     0.0
                                                51.6%                 599 TAUBATE--440  1  -165.4     4.0   162.4 0.980F
                                                51.9%                 599 TAUBATE--440  2  -166.4     4.0   163.5 0.980F
                                                 3.0%                3456 TAUBATE--138  1   306.2    -2.5   300.7                29
                                                 6.7%                3850 CJORDAO__138  1    12.8    -2.8    12.8                30
                                                14.6%                3850 CJORDAO__138  2    12.8    -2.8    12.8                30
  611    1  0   1.030     0.0     0.0     0.0     0.0     0.0     0.0
 SALTGRD-Y230   -73.4     0.0     0.0     0.0     0.0     0.0     0.0
                                                61.6%                 551 ASSI-LON-230  1  -199.0    36.8   196.4
                                                 6.7%                 612 SALTOGRD-230  1   -17.6    13.3    21.4
                                                67.6%                 615 CHAVANTE-230  1   216.6   -50.1   215.8
  612    1  0   1.029     0.0     0.0     0.0     0.0     0.0     0.0
 SALTOGRD-230   -73.3     0.0     0.0     0.0     0.0     0.0     0.0
                                                 7.2%                 611 SALTGRD-Y230  1    17.6   -15.8    23.0
                                                57.4%                 613 SALTOGRD-088  1   -17.6    15.8    23.0
  613    1  0   1.042     0.0     0.0     0.0     0.0     0.0     0.0
 SALTOGRD-088   -71.0     0.0     0.0     0.0     0.0     0.0     0.0
                                                60.6%                 512 S.GRANDE-4GR  1   -58.7    -0.4    56.3 1.045F        15
                                            SUP 100.9%                 557 CANOAS-2--88  1   -43.4    16.1    44.4
                                                54.8%                 612 SALTOGRD-230  1    17.6   -14.6    21.9 1.048S
                                                76.3%                 616 CHAVANTES-88  1    31.1   -16.0    33.6
                                                19.5%                 876 Andira----88  1    10.2     4.0    10.5                22
                                                19.5%                 876 Andira----88  2    10.2     4.0    10.5                22
                                            SUP 117.4%                2045 OURIN-1-Y-88  1    53.7    -4.2    51.6                06
                                                51.0%                3197 C MOTA    88  1   -20.6    11.1    22.4                35
  615  230  0   1.034     0.0     0.0     0.0     0.0     0.0     0.0
 CHAVANTE-230   -76.4     0.0     0.0     0.0     0.0     0.0     0.0
                                                70.1%                 514 CHAVANTE-4GR  1  -331.0   -38.5   322.4 1.050F        15
                                                67.0%                 611 SALTGRD-Y230  1  -214.6    53.0   213.8
                                                38.1%                 616 CHAVANTES-88  1     4.9    15.0    15.3
                                                38.1%                 616 CHAVANTES-88  2     4.9    15.0    15.3
                                                71.4%                 625 BOTUCATU-230  1   141.0   -14.7   137.2
                                                34.8%                 625 BOTUCATU-230  2   196.4   -22.9   191.3
                                                58.7%                 641 PIRAJU---230  1   191.2   -30.2   187.3
                                                10.1%                 884 Figueira-230  1     7.0    23.3    23.6                21
CEPEL - CENTRO DE PESQUISAS DE ENERGIA ELETRICA - PROGRAMA DE ANALISE DE REDES - V08MAR05A                                PAG. 107

ANUAL 06/07 * SETEMBRO 2006 PESADA S/SE 19H N/NE 19H * ANAT0 - FSE - C13
RELATORIO COMPLETO DO SISTEMA * AREA  5 * *           C T E E P            *

X----------------- D A D O S  -  B A R R A -------------------------X------------ F L U X O S  -  C I R C U I T O S ------------X
```

```
 DA BARRA      TENSAO GERACAO INJ EQV  CARGA   ELO CC  SHUNT    MOTOR
 NUM. KV TIPO   MOD/     MW/     MW/     MW/     MW/   Mvar/     MW/
     NOME       ANG     Mvar    Mvar    Mvar    Mvar   EQUIV    Mvar  PARA BARRA                    FLUXOS
                                                FLUXO % SHUNT L         NUM.     NOME     NC     MW    Mvar  MVA/V_d   TAP  DEFAS TIE
X------------X-------X-------X-------X-------X-------X-------X-------X----X------------X--X-------X-------X-------X------X-----X---X

 616    1  0   1.048     0.0     0.0     0.0     0.0     0.0     0.0
CHAVANTES-88   -77.0     0.0     0.0     0.0     0.0     0.0     0.0
                                              74.7%                  613 SALTOGRD-088  1   -29.4    17.9    32.9
                                              36.4%                  615 CHAVANTE-230  1    -4.9   -14.4    14.6 1.048*
                                              36.4%                  615 CHAVANTE-230  2    -4.9   -14.4    14.6 1.048*
                                              94.0%                 2036 BCAMPOS-Y-88  1    37.4    -1.5    35.7              06
                                              59.8%                 2040 BOTUCATU--88  1    20.5   -12.1    22.7              06
                                              66.8%                 2043 OURIN-2-Y-88  1   -18.6    24.6    29.4              06
 618  230  0   1.035     0.0     0.0     0.0     0.0     0.0     0.0
JURUMIRI-230   -81.8     0.0     0.0     0.0     0.0     0.0     0.0
                                              66.3%                  506 JURUMIRI-2GR  1   -77.9    -7.2    75.6 1.050F       15
                                              43.5%                  619 JURUMI-A-138  1    61.5   -27.9    65.2 1.045*
                                              69.5%                  620 JURUMI-B-138  1   105.8   -21.6   104.3 1.021*
                                              49.2%                  629 AVARE----230  1   162.3    -0.6   156.9
                                              78.2%                  641 PIRAJU---230  1  -251.6    57.3   249.4
 619    1  0   1.009     0.0     0.0     0.0     0.0     0.0     0.0
JURUMI-A-138   -84.1     0.0     0.0     0.0     0.0     0.0     0.0
                                              45.4%                  618 JURUMIRI-230  1   -61.5    30.9    68.2
                                              85.2%                  624 CBONITO--138  1    61.5   -30.9    68.2
 620    1  0   1.030     0.0     0.0     0.0     0.0     0.0     0.0
JURUMI-B-138   -85.6     0.0     0.0     0.0     0.0     0.0     0.0
                                              71.0%                  618 JURUMIRI-230  1  -105.8    29.0   106.5
                                          SUP 133.1%                2028 ITAI-Y---138  1   105.8   -29.0   106.5              06
 623  230  0   1.033     0.0     0.0     0.0     0.0     0.0     0.0
CBONITO--230   -93.6     0.0     0.0     0.0     0.0     0.0     0.0
                                              67.5%                  624 CBONITO--138  1    50.5   -13.6    50.7 1.005F
                                              67.5%                  624 CBONITO--138  2    50.5   -13.6    50.7 1.005F
                                              63.7%                  625 BOTUCATU-230  1  -101.1    27.1   101.3
 624    1  0   1.047     0.0     0.0     0.0     0.0    65.8     0.0
CBONITO--138   -97.1     0.0     0.0     0.0     0.0     0.0     0.0
                                              79.8%                  619 JURUMI-A-138  1   -55.9    36.6    63.8
                                              29.6%                  622 ITAPEVA--138  1    29.4    -4.5    28.4              06
                                              29.6%                  622 ITAPEVA--138  2    29.4    -4.5    28.4              06
                                              67.9%                  623 CBONITO--230  1   -50.5    16.9    50.9
                                              67.9%                  623 CBONITO--230  2   -50.5    16.9    50.9
                                              29.2%                  741 ITAPETI2-138  1    24.0    -4.6    23.4              06
                                              29.2%                  741 ITAPETI2-138  2    24.0    -4.6    23.4              06
                                              39.0%                  747 REGISTRO-138  1    28.7   -15.5    31.2              06
                                              39.0%                  747 REGISTRO-138  2    28.7   -15.5    31.2              06
                                              98.9%                 2024 BURI-Y---138  1   -68.9    46.0    79.1              06
                                              29.3%                 2026 DURATEX-Y138  1    24.1    -4.6    23.4              06
                                               0.4%                 3918 C_BONITO_138  1    37.6     3.1    36.0              30
```





```
X----------------- D A D O S  -  B A R R A ------------------------X------------ F L U X O S  -  C I R C U I T O S ------------X
 DA BARRA      TENSAO GERACAO INJ EQV  CARGA   ELO CC  SHUNT    MOTOR
 NUM. KV TIPO   MOD/     MW/     MW/     MW/     MW/   Mvar/     MW/
     NOME       ANG     Mvar    Mvar    Mvar    Mvar   EQUIV    Mvar  PARA BARRA                    FLUXOS
                                                FLUXO % SHUNT L         NUM.     NOME     NC     MW    Mvar  MVA/V_d   TAP  DEFAS TIE
X------------X-------X-------X-------X-------X-------X-------X-------X----X------------X--X-------X-------X-------X------X-----X---X
```

```
 625  230  0   1.019     0.0     0.0     0.0     0.0     0.0     0.0
BOTUCATU-230   -86.8     0.0     0.0     0.0     0.0     0.0     0.0
                                              44.7%                 410 E.SOUZA--230  1   143.2   -24.4   142.5                 04
                                              70.1%                 615 CHAVANTE-230  1  -136.3    15.5   134.6
                                              34.1%                 615 CHAVANTE-230  2  -189.5    23.5   187.4
                                              67.5%                 623 CBONITO--230  1   103.5   -35.4   107.3
                                              51.8%                 626 BOTUCATU-138  1    78.8     8.5    77.7 1.000F
                                              51.8%                 626 BOTUCATU-138  2    78.8     8.5    77.7 1.000F
                                              67.3%                 626 BOTUCATU-138  3    51.1     5.5    50.5 1.000F
                                              39.8%                 629 AVARE----230  1  -129.5    -1.8   127.1
 626  138  0   1.014     0.0     0.0     0.0     0.0     0.0     0.0
BOTUCATU-138   -90.3     0.0     0.0     0.0     0.0     0.0     0.0
                                              51.8%                 625 BOTUCATU-230  1   -78.8    -3.7    77.7
                                              51.8%                 625 BOTUCATU-230  2   -78.8    -3.7    77.7
                                              67.3%                 625 BOTUCATU-230  3   -51.1    -2.4    50.5
                                              24.4%                 631 AUXILI-YP138  1    17.5     9.2    19.5                 06
                                               8.7%                 635 BBONITA--138  1    -6.9     1.3     7.0                 06
                                              61.4%                 748 TIETE----138  1    54.5   -24.7    59.0                 06
                                              64.2%                2032 LARANJA1Y138  1    57.9   -23.6    61.7                 06
                                              55.4%                2040 BOTUCATU--88  1    -1.1    13.4    13.3                 06
                                              55.4%                2040 BOTUCATU--88  2    -1.1    13.4    13.3                 06
                                              29.7%                2150 BOTUCATU-138  1    44.5     9.5    44.8                 07
                                              30.9%                2150 BOTUCATU-138  2    43.4    11.3    44.2                 07
 629    1  0   1.026     1.0     0.0     0.0     0.0     0.0     0.0
AVARE----230   -84.5     0.2     0.0     0.0     0.0     0.0     0.0
                                              49.2%                 618 JURUMIRI-230  1  -161.0    -2.5   156.9
                                              39.9%                 625 BOTUCATU-230  1   130.4    -3.7   127.1
                                              21.0%                3150 AVARE----230  1    31.6     6.4    31.4                 37
 641    1  0   1.033     0.0     0.0     0.0     0.0     0.0     0.0
PIRAJU---230   -79.5     0.0     0.0     0.0     0.0     0.0     0.0
                                               0.7%                 614 PIRAJU---2GR  1   -64.0    21.5    65.4 1.010F         41
                                              58.2%                 615 CHAVANTE-230  1  -189.4    30.9   185.8
                                              78.5%                 618 JURUMIRI-230  1   253.4   -52.4   250.5
 732    1  0   1.040     0.0     0.0     0.0     0.0     0.0     0.0
TBAIXADA-138   -93.4     0.0     0.0     0.0     0.0     0.0     0.0
                                              38.5%                 472 BAIXADA--230  1   -60.0     1.6    57.7                 04
                                              38.5%                 472 BAIXADA--230  2   -60.0     1.6    57.7                 04
                                              41.0%                 723 MANAH-YE-138  1    64.3    -0.5    61.9                 06
                                              35.4%                 734 V.CARVAL-138  1    55.6    -2.8    53.5                 06
```





TOTAIS DA AREA  5

```
X--------X--------X--------X--------X--------X--------X--------X--------X
  GERACAO  INJ EQV   CARGA   ELO CC    SHUNT   EXPORT   IMPORT   PERDAS
    MW/      MW/      MW/      MW/     Mvar/     MW/      MW/      MW/
   Mvar     Mvar     Mvar     Mvar     EQUIV    Mvar     Mvar     Mvar
X--------X--------X--------X--------X--------X--------X--------X--------X

     1.0      0.0      0.0      0.0    -35.8  11923.2  12313.1    390.9
   -38.5      0.0      0.0      0.0      0.0   3534.3   1244.6  -2363.9
```

```
X----------------- D A D O S  -  B A R R A ------------------------X------------ F L U X O S  -  C I R C U I T O S ------------X
 DA BARRA      TENSAO GERACAO INJ EQV  CARGA   ELO CC  SHUNT    MOTOR
 NUM. KV TIPO   MOD/     MW/     MW/     MW/     MW/   Mvar/     MW/
     NOME       ANG     Mvar    Mvar    Mvar    Mvar   EQUIV    Mvar  PARA BARRA                    FLUXOS
                                                FLUXO % SHUNT L         NUM.     NOME     NC     MW    Mvar  MVA/V_d   TAP  DEFAS TIE
X------------X-------X-------X-------X-------X-------X-------X-------X----X------------X--X-------X-------X-------X------X-----X---X

  554    1  0   1.044     0.0     0.0     0.0     0.0     0.0     0.0
 ASSIS-----88   -67.9     0.0     0.0     0.0     0.0     0.0     0.0
                                              70.9%                  551 ASSI-LON-230  1    10.1   -26.3    26.9 1.088*        05
                                              70.9%                  551 ASSI-LON-230  2    10.1   -26.3    26.9 1.088*        05
                                              68.4%                  555 CANOAS-1--88  1   -34.2    12.5    34.9               05
                                              53.2%                 2008 ASSIS3-Y--88  1    -6.3    23.6    23.4
                                              57.1%                 3192 ASSIS I   88  1    20.4    16.4    25.1               35
  578   14  0   1.040     0.0     0.0     0.0     0.0     0.0     0.0
 DERV_JUP_TRI   -62.9     0.0     0.0     0.0     0.0     0.0     0.0
                                               7.8%                  541 JUPIA----138  1     4.2     4.9     6.3               05
                                               7.8%                 1907 CASTILHOY138  1    -4.2    -4.9     6.3
                                               0.0%                 4303 UTETLAG_138B  1     0.0     0.0     0.0               41
  579   14  0   1.040     0.0     0.0     0.0     0.0     0.0     0.0
 DERV_JUP_VAL   -62.9     0.0     0.0     0.0     0.0     0.0     0.0
                                              62.8%                  541 JUPIA----138  1   -52.1    -3.8    50.3               05
                                              62.8%                  673 VALPARAIS138  1    52.1     3.8    50.3
                                               0.0%                 4303 UTETLAG_138B  1     0.0     0.0     0.0               41
  621    1  0   1.031     0.0     0.0     0.0     0.0     0.0     0.0
 ITARARE2-138  -100.2     0.0     0.0     0.0     0.0     0.0     0.0
                                              12.2%                  622 ITAPEVA--138  1   -12.0    -1.4    11.7
                                              12.1%                  628 CIMENTMAR138  1   -11.9    -1.4    11.6
                                               0.2%                 1930 ITARARE2-69   1    23.8     2.8    23.3 0.996*
  622    1  0   1.036     0.0     0.0     0.0     0.0     0.0     0.0
 ITAPEVA--138   -99.4     0.0     0.0     0.0     0.0     0.0     0.0
                                              12.2%                  621 ITARARE2-138  1    12.0    -1.7    11.7
                                              29.1%                  624 CBONITO--138  1   -28.9     1.6    28.0               05
                                              29.1%                  624 CBONITO--138  2   -28.9     1.6    28.0               05
                                              12.8%                  628 CIMENTMAR138  1    12.6    -1.5    12.3
                                               0.3%                 3924 ITAPEV138_69  1    33.2     0.0    32.1               30
  628    1  0   1.035     0.0     0.0     0.0     0.0     0.0     0.0
 CIMENTMAR138   -99.5     0.0     0.0     0.0     0.0     0.0     0.0
                                              12.1%                  621 ITARARE2-138  1    11.9    -1.4    11.6
                                              12.8%                  622 ITAPEVA--138  1   -12.6     1.1    12.2
                                               0.0%                 3922 ITAPEV_M_138  1     0.7     0.3     0.7               30
  630    1  0   0.951     0.0     0.0     0.0     0.0     0.0     0.0
 ARACAT-YP138   -73.7     0.0     0.0     0.0     0.0     0.0     0.0
                                              41.3%                  646 IPORA-YP-138  1    -4.7   -31.1    33.0
                                              89.5%                  673 VALPARAIS138  1   -67.9    -5.7    71.6
                                              89.1%                 2141 TRIAN-YP-138  1    72.6    36.7    85.6               07
CEPEL - CENTRO DE PESQUISAS DE ENERGIA ELETRICA - PROGRAMA DE ANALISE DE REDES - V08MAR05A                                PAG. 111

ANUAL 06/07 * SETEMBRO 2006 PESADA S/SE 19H N/NE 19H * ANAT0 - FSE - C13
RELATORIO COMPLETO DO SISTEMA * AREA  6 * *     C T E E P - DISTRIBUICAO     *

X----------------- D A D O S  -  B A R R A ------------------------X------------ F L U X O S  -  C I R C U I T O S ------------X
 DA BARRA      TENSAO GERACAO INJ EQV  CARGA   ELO CC  SHUNT    MOTOR
 NUM. KV TIPO   MOD/     MW/     MW/     MW/     MW/   Mvar/     MW/
     NOME       ANG     Mvar    Mvar    Mvar    Mvar   EQUIV    Mvar  PARA BARRA                    FLUXOS
                                                FLUXO % SHUNT L         NUM.     NOME     NC     MW    Mvar  MVA/V_d   TAP  DEFAS TIE
X------------X-------X-------X-------X-------X-------X-------X-------X----X------------X--X-------X-------X-------X------X-----X---X

  631    1  0   1.012     0.0     0.0     0.0     0.0     0.0     0.0
```

```
 AUXILI-YP138   -90.4     0.0     0.0     0.0     0.0     0.0     0.0
                                                24.6%                 626 BOTUCATU-138  1   -17.5    -9.6    19.7                05
                                                12.4%                 635 BBONITA--138  1   -10.0     0.5     9.9
                                                35.8%                2337 AUXILIADO138  1    27.5     9.1    28.6                07
  633    1  0   1.030     0.0     0.0     0.0     0.0     0.0     0.0
 BARIRI---138   -81.0     0.0     0.0     0.0     0.0     0.0     0.0
                                                26.5%                 562 BAURU----138  1    20.1    -8.5    21.2                05
                                                26.5%                 562 BAURU----138  2    20.1    -8.5    21.2                05
                                                18.3%                 644 IBIT-YP138    1    -6.9    13.4    14.6
                                                40.6%                 645 IBITINGA-138  1   -33.3     3.7    32.5
  634    1  0   1.044     0.0     0.0     0.0     0.0     0.0     0.0
 BARIRI-A-138   -87.5     0.0     0.0     0.0     0.0     0.0     0.0
                                                71.4%                 515 BARIRI---3GR  1  -110.0   -44.1   113.5 1.025F        14
                                                45.4%                 635 BBONITA--138  1    36.7     9.4    36.3
                                                97.1%                 650 JAU-YP---138  1    73.3    34.7    77.7
  635    1  0   1.014     0.0     0.0     0.0     0.0     0.0     0.0
 BBONITA--138   -89.7     0.0     0.0     0.0     0.0     0.0     0.0
                                                71.3%                 516 B.BONITA-4GR  1  -112.0     4.2   110.5 1.000F        14
                                                10.3%                 626 BOTUCATU-138  1     7.0    -4.6     8.2                05
                                                13.1%                 631 AUXILI-YP138  1    10.1    -3.3    10.5
                                                46.5%                 634 BARIRI-A-138  1   -36.1   -11.1    37.2
                                                14.6%                 636 BBONITA---69  1     3.6     0.9     3.7 0.992*
                                                18.8%                 650 JAU-YP---138  1     4.3    14.6    15.0
                                                75.7%                 686 DOISCO-YP138  1    61.4    -0.5    60.6
                                                53.0%                 701 RCLARO-1-138  1    42.2    -8.1    42.4
                                                83.2%                2110 BBON+USBA138  1    19.5     8.0    20.8                07
  636    1  0   1.019     0.0     0.0     0.0     0.0     0.0     0.0
 BBONITA---69   -90.4     0.0     0.0     0.0     0.0     0.0     0.0
                                                14.5%                 635 BBONITA--138  1    -3.6    -0.8     3.6
                                                16.5%                2123 IG.TIETE--69  1     3.6     0.8     3.6                07
  638    1  0   1.015     0.0     0.0     0.0     0.0     0.0     0.0
 CATAND-2-138   -79.5     0.0     0.0     0.0     0.0     0.0     0.0
                                                23.8%                 645 IBITINGA-138  1   -15.6   -11.3    19.0
                                                25.1%                 665 SJRPRETO-138  1    16.3     8.4    18.1
                                                18.2%                 671 UBARANA--138  1   -19.9    -7.2    20.9
                                                40.5%                 675 VVENTU-YP138  1    26.9    12.4    29.1
                                                21.9%                1914 N.HORIZ--138  1   -14.4   -10.5    17.5
                                                42.3%                3154 CATANDUVA138  1    37.4    17.3    40.6                35
                                                27.4%                3157 URUPES   138  1   -30.6    -9.1    31.5                35
CEPEL - CENTRO DE PESQUISAS DE ENERGIA ELETRICA - PROGRAMA DE ANALISE DE REDES - V08MAR05A                                PAG. 112

ANUAL 06/07 * SETEMBRO 2006 PESADA S/SE 19H N/NE 19H * ANAT0 - FSE - C13
RELATORIO COMPLETO DO SISTEMA * AREA  6 * *     C T E E P - DISTRIBUICAO     *

X----------------- D A D O S  -  B A R R A -------------------------X------------ F L U X O S  -  C I R C U I T O S ------------X
 DA BARRA      TENSAO GERACAO INJ EQV  CARGA   ELO CC  SHUNT    MOTOR
 NUM. KV TIPO   MOD/     MW/     MW/     MW/     MW/   Mvar/     MW/
     NOME       ANG     Mvar    Mvar    Mvar    Mvar   EQUIV    Mvar  PARA BARRA                   FLUXOS
                                                FLUXO % SHUNT L         NUM.     NOME     NC     MW    Mvar  MVA/V_d   TAP  DEFAS TIE
X------------X-------X-------X-------X-------X-------X-------X-------X----X------------X--X-------X-------X-------X------X-----X---X

  639    1  0   0.978     0.0     0.0     0.0     0.0     0.0     0.0
 DRACENA--138   -67.8     0.0     0.0     0.0     0.0     0.0     0.0
                                                56.4%                 548 TAQUARUC-138  1   -44.1    -0.1    45.1                05
                                                22.6%                 640 FLORIDA--138  1    17.0    -5.0    18.1
                                                22.6%                 640 FLORIDA--138  2    17.0    -5.0    18.1
                                                 0.2%                1912 DRACENA--69   1    14.7     4.6    15.8 0.950F
                                                28.0%                3176 PVENCESL 138  1   -21.4     4.8    22.4                35
                                                 0.2%                3887 DRACENA__138  1    16.8     0.7    17.2                30
  640    1  0   0.975     0.0     0.0     0.0     0.0     0.0     0.0
```

```
 FLORIDA--138   -69.0     0.0     0.0     0.0     0.0     0.0     0.0
                                                21.9%                 639 DRACENA--138  1   -16.9     2.5    17.5
                                                21.9%                 639 DRACENA--138  2   -16.9     2.5    17.5
                                                24.2%                 642 FLORIDA   69  1    13.2     5.0    14.5 0.950F
                                                32.9%                 659 PPRUDENTE138  1   -25.3    -4.3    26.3
                                                15.1%                 673 VALPARAIS138  1     3.5   -11.3    12.1
                                                15.1%                 678 ORIENT-YP138  1     5.3   -10.5    12.1
                                                32.5%                1918 FLOREST-Y138  1   -25.1    -3.8    26.0
                                                60.0%                3174 O CRUZ   138  1    53.3    17.6    57.6                35
                                                 0.1%                3889 FLORIDAP_138  1     8.7     2.3     9.2                30
  642    1  0   1.021     0.0     0.0     0.0     0.0     0.0     0.0
 FLORIDA   69   -69.8     0.0     0.0     0.0     0.0     0.0     0.0
                                                23.0%                 640 FLORIDA--138  1   -13.2    -4.8    13.8
                                                44.5%                3177 ADAMANTINA69  1    13.2     4.8    13.8                35
  644    1  0   1.029     0.0     0.0     0.0     0.0     0.0     0.0
 IBIT-YP138     -80.9     0.0     0.0     0.0     0.0     0.0     0.0
                                                18.6%                 633 BARIRI---138  1     6.9   -13.7    14.9
                                                43.8%                 645 IBITINGA-138  1   -35.9     3.0    35.0
                                                23.5%                2341 IBIT+ITAP138  1    29.0    10.7    30.0                07
  645    1  0   1.041     0.0     0.0     0.0     0.0     0.0     0.0
 IBITINGA-138   -78.3     0.0     0.0     0.0     0.0     0.0     0.0
                                                69.8%                 517 IBITINGA-3GR  1  -106.0    -6.0   102.0 1.025F        14
                                                41.3%                 633 BARIRI---138  1    33.9    -6.1    33.1
                                                20.7%                 638 CATAND-2-138  1    15.9     6.9    16.6
                                                44.2%                 644 IBIT-YP138    1    36.5    -5.0    35.4
                                                26.8%                3155 BORBOREMA138  1    19.8    10.3    21.4                35
  646    1  0   0.956     0.0     0.0     0.0     0.0     0.0     0.0
 IPORA-YP-138   -73.8     0.0     0.0     0.0     0.0     0.0     0.0
                                                40.9%                 630 ARACAT-YP138  1     4.8    30.9    32.7
                                                53.2%                2038 TAP-BIRN-138  1   -20.4   -35.2    42.5                07
                                                67.7%                2342 IPORA----138  1    15.6     4.3    16.9                07
CEPEL - CENTRO DE PESQUISAS DE ENERGIA ELETRICA - PROGRAMA DE ANALISE DE REDES - V08MAR05A                              PAG. 113

ANUAL 06/07 * SETEMBRO 2006 PESADA S/SE 19H N/NE 19H * ANAT0 - FSE - C13
RELATORIO COMPLETO DO SISTEMA * AREA  6 * *     C T E E P - DISTRIBUICAO     *

X----------------- D A D O S  -  B A R R A -------------------------X------------ F L U X O S  -  C I R C U I T O S ------------X
 DA BARRA      TENSAO GERACAO INJ EQV  CARGA   ELO CC  SHUNT    MOTOR
 NUM. KV TIPO   MOD/     MW/     MW/     MW/     MW/   Mvar/     MW/
     NOME       ANG     Mvar    Mvar    Mvar    Mvar   EQUIV    Mvar  PARA BARRA                    FLUXOS
                                                FLUXO % SHUNT L         NUM.     NOME     NC     MW    Mvar  MVA/V_d   TAP  DEFAS TIE
X------------X-------X-------X-------X-------X-------X-------X-------X----X------------X--X-------X-------X-------X------X-----X---X

  647    1  0   1.036     0.0     0.0     0.0     0.0     0.0     0.0
 ISOLTEIRA138   -66.6     0.0     0.0     0.0     0.0     0.0     0.0
                                                84.5%                 543 3IRMAOS--138  1   -69.7     6.6    67.6                05
                                                52.7%                 649 JALES----138  1    40.9   -15.4    42.2
                                                45.0%                1853 Selviria-138  1   -31.3    20.2    36.0                26
                                                61.7%                1909 PBARRE-Y-138  1    49.1   -14.3    49.4
                                                 0.1%                3890 I_SOLTEI_138  1    11.1     2.9    11.1                30
  648  138  0   1.031     0.0     0.0     0.0     0.0     0.0     0.0
 PIONEIRY-138   -70.1     0.0     0.0     0.0     0.0     0.0     0.0
                                                51.7%                1909 PBARRE-Y-138  1   -39.9    15.1    41.4
                                                51.1%                1910 PDOESTE-Y138  1    39.9   -13.7    40.9
                                                 0.9%                3904 PIONEIRO_138  1     0.0    -1.4     1.3                30
  649    1  0   1.032     0.0     0.0     0.0     0.0     0.0     0.0
 JALES----138   -73.4     0.0     0.0     0.0     0.0     0.0     0.0
                                                24.2%                 537 AVERMELH-138  1   -18.5    -7.5    19.3                05
                                                24.2%                 537 AVERMELH-138  2   -18.5    -7.5    19.3                05
                                                49.7%                 647 ISOLTEIRA138  1   -39.1    12.5    39.7
```

```
                                                 32.5%                 674 VOTUPO-2-138  1    25.5    -8.4    26.0
                                                 51.0%                1906 FERNAND-Y138  1    41.4    -7.6    40.8
                                                 41.8%                1910 PDOESTE-Y138  1   -32.0    12.7    33.4
                                                  0.2%                1928 JALES-69      1    21.7     5.8    21.7 0.992*
                                                  0.2%                3891 JALES_138_69  1    19.5     0.0    18.9                30
  650    1  0   1.004     0.0     0.0     0.0     0.0     0.0     0.0
 JAU-YP---138   -89.7     0.0     0.0     0.0     0.0     0.0     0.0
                                                 98.1%                 634 BARIRI-A-138  1   -71.7   -32.5    78.4
                                                 20.6%                 635 BBONITA--138  1    -4.2   -16.0    16.5
                                                 88.0%                2125 JAU+ANT.-138  1    76.0    48.5    89.8                07
  652    1  0   1.029     0.0     0.0     0.0     0.0     0.0     0.0
 NAVANHAN-138   -71.7     0.0     0.0     0.0     0.0     0.0     0.0
                                                 75.0%                 518 N.AVANHA-3GR  1  -265.0   -39.8   260.4 1.050F        14
                                                 83.2%                 653 GUARANIY-138  1    51.6    45.0    66.6
                                                 45.8%                 654 PENAPOLIS138  1    53.0   -11.0    52.6
                                                 35.4%                 661 PROMISSAO138  1    38.2   -17.2    40.7
                                                 52.4%                 665 SJRPRETO-138  1    62.0     1.7    60.2
                                                 52.4%                 665 SJRPRETO-138  2    62.0     1.7    60.2
                                                 24.2%                 673 VALPARAIS138  1    -7.1    18.6    19.4
                                                  0.1%                3883 N_AVANHA_138  1     5.3     0.9     5.2                30
  653    1  0   0.965     0.0     0.0     0.0     0.0     0.0     0.0
 GUARANIY-138   -73.6     0.0     0.0     0.0     0.0     0.0     0.0
                                                 85.3%                 652 NAVANHAN-138  1   -49.9   -43.0    68.3
                                                 68.0%                2038 TAP-BIRN-138  1    35.3    38.9    54.4                07
                                                 62.9%                2311 GUARANI--138  1    14.6     4.1    15.7                07
CEPEL - CENTRO DE PESQUISAS DE ENERGIA ELETRICA - PROGRAMA DE ANALISE DE REDES - V08MAR05A                                PAG. 114

ANUAL 06/07 * SETEMBRO 2006 PESADA S/SE 19H N/NE 19H * ANAT0 - FSE - C13
RELATORIO COMPLETO DO SISTEMA * AREA  6 * *     C T E E P - DISTRIBUICAO     *

X----------------- D A D O S  -  B A R R A -------------------------X------------ F L U X O S  -  C I R C U I T O S ------------X
 DA BARRA      TENSAO GERACAO INJ EQV  CARGA   ELO CC  SHUNT    MOTOR
 NUM. KV TIPO   MOD/     MW/     MW/     MW/     MW/   Mvar/     MW/
     NOME       ANG     Mvar    Mvar    Mvar    Mvar   EQUIV    Mvar  PARA BARRA                    FLUXOS
                                                FLUXO % SHUNT L         NUM.     NOME     NC     MW    Mvar  MVA/V_d   TAP  DEFAS TIE
X------------X-------X-------X-------X-------X-------X-------X-------X----X------------X--X-------X-------X-------X------X-----X---X

  654    1  0   1.029     0.0     0.0     0.0     0.0     0.0     0.0
 PENAPOLIS138   -74.9     0.0     0.0     0.0     0.0     0.0     0.0
                                                 45.2%                 652 NAVANHAN-138  1   -52.4    10.7    52.0
                                                 67.9%                 655 PENAPOLIS-69  1    16.6     5.4    17.0 0.974*
                                                 33.2%                 656 PENAPO-YP138  1    35.8   -16.1    38.2
  655    1  0   1.040     0.0     0.0     0.0     0.0     0.0     0.0
 PENAPOLIS-69   -77.9     0.0     0.0     0.0     0.0     0.0     0.0
                                                 66.2%                 654 PENAPOLIS138  1   -16.6    -4.5    16.5
                                                  5.5%                2300 BARBOSA---69  1     1.7    -0.1     1.6                07
                                                 46.8%                2305 BRA+GLI---69  1    14.9     4.6    15.0                07
  656    1  0   1.031     0.0     0.0     0.0     0.0     0.0     0.0
 PENAPO-YP138   -75.3     0.0     0.0     0.0     0.0     0.0     0.0
                                                 33.0%                 654 PENAPOLIS138  1   -35.7    15.8    37.9
                                                 23.2%                 661 PROMISSAO138  1    12.3   -24.6    26.7
                                                 21.1%                2345 PENAPOLIS138  1    23.4     8.8    24.3                07
  657  138  0   1.041     0.0     0.0     0.0     0.0     0.0     0.0
 PPRIMA-A-138   -61.4     0.0     0.0     0.0     0.0     0.0     0.0
                                                 74.1%                 546 ROSANA---138  1   -88.5     5.0    85.2                05
                                                 59.6%                1098 TravesRP-138  1    88.5    -5.0    85.2                26
  658    1  0   1.045     0.0     0.0     0.0     0.0     0.0     0.0
 PPRIMA-B-138   -59.5     0.0     0.0     0.0     0.0     0.0     0.0
                                                  8.8%                 546 ROSANA---138  1   -10.1    -3.2    10.1                05
                                                  0.1%                3897 P_PRIMAVE138  1    10.1     3.2    10.1                30
```

```
 659    1  0   0.996     0.0     0.0     0.0     0.0     0.0     0.0
 PPRUDENTE138   -66.6     0.0     0.0     0.0     0.0     0.0     0.0
                                                36.1%                 546 ROSANA---138  1   -33.3    -9.1    34.7                05
                                                36.1%                 546 ROSANA---138  2   -33.3    -9.1    34.7                05
                                                57.3%                 550 CAPIVARA-138  1   -42.4   -16.9    45.8                05
                                                32.3%                 640 FLORIDA--138  1    25.7     1.1    25.8
                                                33.3%                 663 PPRUDENTE 88  1    14.7    13.4    20.0 0.983*
                                                33.3%                 663 PPRUDENTE 88  2    14.7    13.4    20.0 0.983*
                                                41.0%                1911 PIRAPO-1Y138  1   -29.6   -13.8    32.8
                                                58.0%                3172 PRUDENTII138  1    48.0     7.0    48.7                35
                                                 0.4%                3178 PRP-P3/P5138  1    35.5    14.0    38.3                35
CEPEL - CENTRO DE PESQUISAS DE ENERGIA ELETRICA - PROGRAMA DE ANALISE DE REDES - V08MAR05A                                PAG. 115

ANUAL 06/07 * SETEMBRO 2006 PESADA S/SE 19H N/NE 19H * ANAT0 - FSE - C13
RELATORIO COMPLETO DO SISTEMA * AREA  6 * *     C T E E P - DISTRIBUICAO     *

X------------------ D A D O S  -  B A R R A -------------------------X------------- F L U X O S  -  C I R C U I T O S -------------X
 DA BARRA      TENSAO GERACAO INJ EQV  CARGA   ELO CC  SHUNT    MOTOR
 NUM. KV TIPO   MOD/     MW/     MW/     MW/     MW/   Mvar/     MW/
     NOME       ANG     Mvar    Mvar    Mvar    Mvar   EQUIV    Mvar  PARA BARRA                    FLUXOS
                                                FLUXO % SHUNT L         NUM.     NOME      NC     MW    Mvar  MVA/V_d   TAP  DEFAS TIE
X------------X-------X-------X-------X-------X-------X-------X-------X----X------------X--X-------X-------X-------X------X-----X---X

 661    1  0   1.044     0.0     0.0     0.0     0.0     0.0     0.0
 PROMISSAO138   -75.9     0.0     0.0     0.0     0.0     0.0     0.0
                                                72.0%                 519 PROMISSA-3GR  1  -211.0   -79.3   216.0 1.050F        14
                                                33.5%                 652 NAVANHAN-138  1   -37.6    14.3    38.6
                                                21.8%                 656 PENAPO-YP138  1   -12.2    23.1    25.0
                                                61.9%                 671 UBARANA--138  1    72.9    14.8    71.2
                                                60.1%                2143 TROPICAL-138  1    79.5    11.7    77.0                07
                                                58.6%                2162 LINS+FBER138  1    77.5    10.8    74.9                07
                                                26.1%                3157 URUPES   138  1    31.0     4.5    30.0                35
 663    1  0   1.000     0.0     0.0     0.0     0.0     0.0     0.0
 PPRUDENTE 88   -67.5     0.0     0.0     0.0     0.0     0.0     0.0
                                                32.7%                 659 PPRUDENTE138  1   -14.7   -13.0    19.6
                                                32.7%                 659 PPRUDENTE138  2   -14.7   -13.0    19.6
                                                30.3%                1921 MARTIN-Y--88  1    -3.4    12.9    13.3
                                                33.3%                3171 PRUDENTEI 88  1    16.4     6.5    17.6                35
                                                33.3%                3171 PRUDENTEI 88  2    16.4     6.5    17.6                35
 665    1  0   0.995     0.0     0.0     0.0     0.0     0.0     0.0
 SJRPRETO-138   -80.3     0.0     0.0     0.0     0.0     0.0     0.0
                                                27.5%                 638 CATAND-2-138  1   -16.1   -11.3    19.8
                                                52.5%                 652 NAVANHAN-138  1   -60.0     0.2    60.3
                                                52.5%                 652 NAVANHAN-138  2   -60.0     0.2    60.3
                                                48.7%                 674 VOTUPO-2-138  1   -38.6    -2.9    38.9
                                                16.8%                 675 VVENTU-YP138  1    -8.4    -8.6    12.1
                                                47.8%                1917 VOTUPO-1Y138  1   -37.9    -2.9    38.3
                                                54.9%                2328 MIR+AERO-138  1    55.3   -10.4    56.6                07
                                                70.4%                2330 PRIMAVERA138  1    67.5    25.4    72.5                07
                                                49.5%                2331 SJRP+AUS-138  1    50.1     8.0    51.0                07
                                                47.1%                2331 SJRP+AUS-138  2    48.2     2.4    48.5                07
 671    1  0   1.031     0.0     0.0     0.0     0.0     0.0     0.0
 UBARANA--138   -77.6     0.0     0.0     0.0     0.0     0.0     0.0
                                                17.1%                 638 CATAND-2-138  1    20.1     2.6    19.6
                                                62.2%                 661 PROMISSAO138  1   -72.4   -13.9    71.5
                                                86.5%                 672 UBARANA---69  1    26.1     5.6    26.0 0.997*
                                                86.5%                 672 UBARANA---69  2    26.1     5.6    26.0 0.997*
 672    1  0   1.020     0.0     0.0     0.0     0.0     0.0     0.0
 UBARANA---69   -81.7     0.0     0.0     0.0     0.0     0.0     0.0
                                                86.3%                 671 UBARANA--138  1   -26.1    -3.7    25.9
```

```
                                                 86.3%                 671 UBARANA--138  2   -26.1    -3.7    25.9
                                                 43.3%                2319 J.BONIFAC-69  1    14.1     5.2    14.7              07
                                                 53.4%                3153 UBARANA   69  1    12.9     2.2    12.8              35
                                            SUP 103.3%                3902 UBARANA_69    1    25.3     0.0    24.8              30
CEPEL - CENTRO DE PESQUISAS DE ENERGIA ELETRICA - PROGRAMA DE ANALISE DE REDES - V08MAR05A                              PAG. 116

ANUAL 06/07 * SETEMBRO 2006 PESADA S/SE 19H N/NE 19H * ANAT0 - FSE - C13
RELATORIO COMPLETO DO SISTEMA * AREA  6 * *     C T E E P - DISTRIBUICAO     *

X----------------- D A D O S  -  B A R R A ------------------------X------------ F L U X O S  -  C I R C U I T O S ------------X
 DA BARRA      TENSAO GERACAO INJ EQV  CARGA   ELO CC  SHUNT    MOTOR
 NUM. KV TIPO   MOD/     MW/     MW/     MW/     MW/   Mvar/     MW/
     NOME       ANG     Mvar    Mvar    Mvar    Mvar   EQUIV    Mvar  PARA BARRA                    FLUXOS
                                                FLUXO % SHUNT L         NUM.     NOME     NC     MW    Mvar  MVA/V_d   TAP  DEFAS TIE
X------------X-------X-------X-------X-------X-------X-------X-------X----X------------X--X-------X-------X-------X------X-----X---X

  673    1  0   0.986     0.0     0.0     0.0     0.0     0.0     0.0
 VALPARAIS138   -69.6     0.0     0.0     0.0     0.0     0.0     0.0
                                                 63.5%                 579 DERV_JUP_VAL  1   -49.9    -4.2    50.8
                                                 89.2%                 630 ARACAT-YP138  1    69.9     8.4    71.4
                                                 11.0%                 640 FLORIDA--138  1    -3.5     8.0     8.8
                                                 31.4%                 652 NAVANHAN-138  1     7.6   -23.6    25.2
                                                 14.3%                 678 ORIENT-YP138  1     3.2    10.8    11.4
                                                 41.3%                1908 MIRANDO-Y138  1   -32.6    -1.0    33.0
                                                 80.2%                2347 VALPARAIS138  1     5.3     1.6     5.6              07
  674    1  0   1.026     0.0     0.0     0.0     0.0     0.0     0.0
 VOTUPO-2-138   -76.2     0.0     0.0     0.0     0.0     0.0     0.0
                                                 26.9%                 537 AVERMELH-138  1   -37.2    -5.5    36.6              05
                                                 31.0%                 649 JALES----138  1   -25.1     4.5    24.8
                                                 48.4%                 665 SJRPRETO-138  1    39.7     0.7    38.7
                                                 71.1%                1901 CARDOSO1Y138  1   -34.4    -6.5    34.1
                                                 17.8%                1906 FERNAND-Y138  1   -13.9     4.5    14.3
                                                 86.4%                1917 VOTUPO-1Y138  1    70.9     2.2    69.1
  675    1  0   1.002     0.0     0.0     0.0     0.0     0.0     0.0
 VVENTU-YP138   -80.1     0.0     0.0     0.0     0.0     0.0     0.0
                                                 41.3%                 638 CATAND-2-138  1   -26.7   -13.3    29.7
                                                 15.0%                 665 SJRPRETO-138  1     8.5     6.8    10.8
                                            SUP 101.5%                2348 VILAVENTU138  1    18.2     6.5    19.3              07
  676  138  0   1.026     0.0     0.0     0.0     0.0     0.0     0.0
 MANUELAPY138   -97.2     0.0     0.0     0.0     0.0     0.0     0.0
                                                 87.2%                 595 S.ANGELO-138  1  -124.3    -2.7   121.2              05
                                                 79.9%                1934 ARUJA-Y--138  1   113.9    -0.8   111.1
                                                  0.1%                3046 MANUELAP-138  1    10.4     3.5    10.7              29
  677    1  0   1.011     0.0     0.0     0.0     0.0     0.0     0.0
 AEROGUA1Y138   -99.8     0.0     0.0     0.0     0.0     0.0     0.0
                                                 42.8%                 694 MAIRIPORA138  1    57.9   -16.1    59.5
                                                 77.6%                1934 ARUJA-Y--138  1   -84.5     6.2    83.8
                                                  0.3%                3045 AER.GUR.-138  1    26.6     9.9    28.1              29
  678    1  0   0.983     0.0     0.0     0.0     0.0     0.0     0.0
 ORIENT-YP138   -69.6     0.0     0.0     0.0     0.0     0.0     0.0
                                                 12.1%                 640 FLORIDA--138  1    -5.2     8.0     9.7
                                                 15.2%                 673 VALPARAIS138  1    -3.2   -11.5    12.1
                                                 77.2%                2291 ORIENTO--138  1     8.4     3.5     9.3              07
  679    1  0   0.957     0.0     0.0     0.0     0.0     0.0     0.0
 Q.AMPAROY138  -102.4     0.0     0.0     0.0     0.0     0.0     0.0
                                                 29.9%                 680 AMPARO-YP138  1    -3.6    22.6    23.9
                                                 31.8%                2182 Q.AMPARO-138  1     7.0     3.0     8.0              07
                                                 33.7%                3159 STEREZINH138  1    -3.4   -25.6    27.0              35
CEPEL - CENTRO DE PESQUISAS DE ENERGIA ELETRICA - PROGRAMA DE ANALISE DE REDES - V08MAR05A                              PAG. 117
```

ANUAL 06/07 * SETEMBRO 2006 PESADA S/SE 19H N/NE 19H * ANAT0 - FSE - C13
RELATORIO COMPLETO DO SISTEMA * AREA 6 * * C T E E P - DISTRIBUICAO *

| DADOS - BARRA | | | | | | | | | FLUXOS - CIRCUITOS | | | | | | | |
|---|---|---|---|---|---|---|---|---|---|---|---|---|---|---|---|---|
| DA BARRA NUM. | KV | TIPO | TENSAO MOD/ ANG | GERACAO MW/ Mvar | INJ EQV MW/ Mvar | CARGA MW/ Mvar | ELO CC MW/ Mvar | SHUNT Mvar/ EQUIV | MOTOR MW/ Mvar | PARA BARRA NUM. | NOME | NC | MW | FLUXOS Mvar | MVA/V_d | TAP | DEFAS | TIE |
| NOME | | | | | | | FLUXO % | SHUNT L | | | | | | | | | | |
| 680 | 1 | 0 | 0.957 | 0.0 | 0.0 | 0.0 | 0.0 | 0.0 | 0.0 | | | | | | | | | |
| AMPARO-YP138 | | | -102.4 | 0.0 | 0.0 | 0.0 | 0.0 | 0.0 | 0.0 | | | | | | | | | |
| | | | | | | | 30.0% | | | 679 | Q.AMPAROY138 | 1 | 3.6 | -22.7 | 24.0 | | | |
| | | | | | | | 46.7% | | | 1957 | PEDREIRAY138 | 1 | -33.0 | 13.9 | 37.4 | | | |
| | | | | | | | 31.1% | | | 2336 | AMPARO---138 | 1 | 29.4 | 8.8 | 32.1 | | | 07 |
| 681 | 1 | 0 | 0.994 | 0.0 | 0.0 | 0.0 | 0.0 | 0.0 | 0.0 | | | | | | | | | |
| BRAGANCA-138 | | | -101.9 | 0.0 | 0.0 | 0.0 | 0.0 | 0.0 | 0.0 | | | | | | | | | |
| | | | | | | | 21.2% | | | 694 | MAIRIPORA138 | 1 | -11.2 | -10.3 | 15.3 | | | |
| | | | | | | | 64.0% | | | 696 | MMIRIM-2-138 | 1 | -50.4 | 7.6 | 51.2 | | | |
| | | | | | | | 52.1% | | | 1950 | CRUZACO1Y138 | 1 | 37.2 | -2.8 | 37.5 | | | |
| | | | | | | | 37.0% | | | 1972 | JARINU-Y-138 | 1 | -43.9 | -28.9 | 52.9 | | | |
| | | | | | | | 72.0% | | | 3158 | BRAGAN€A 138 | 1 | 49.2 | 15.3 | 51.8 | | | 35 |
| | | | | | | SUP | 105.5% | | | 3159 | STEREZINH138 | 1 | 68.8 | 48.1 | 84.4 | | | 35 |
| | | | | | | | 38.6% | | | 3418 | PROGAMBLE138 | 1 | -49.8 | -28.9 | 57.9 | | | 42 |
| 683 | 1 | 0 | 1.039 | 0.0 | 0.0 | 0.0 | 0.0 | 0.0 | 0.0 | | | | | | | | | |
| CACONDE--138 | | | -92.6 | 0.0 | 0.0 | 0.0 | 0.0 | 0.0 | 0.0 | | | | | | | | | |
| | | | | | | | 77.8% | | | 521 | CACONDE--2GR | 1 | -64.0 | -9.4 | 62.3 | 1.028F | | 14 |
| | | | | | | | 50.9% | | | 687 | EUCUNHA--138 | 1 | 25.2 | 2.7 | 24.4 | | | |
| | | | | | | | 57.7% | | | 2003 | SJRPARD-Y138 | 1 | 28.7 | 2.8 | 27.7 | | | |
| | | | | | | | 0.1% | | | 3131 | CACONDE----- | 1 | 10.1 | 3.9 | 10.4 | | | 36 |
| 685 | 1 | 0 | 0.988 | 0.0 | 0.0 | 0.0 | 0.0 | 0.0 | 0.0 | | | | | | | | | |
| DESCAL-YP138 | | | -95.6 | 0.0 | 0.0 | 0.0 | 0.0 | 0.0 | 0.0 | | | | | | | | | |
| | | | | | | | 22.2% | | | 699 | PFERREIRA138 | 1 | -4.4 | -17.0 | 17.8 | | | |
| | | | | | | | 20.7% | | | 702 | SCARLO-YP138 | 1 | -11.2 | 12.0 | 16.6 | | | |
| | | | | | | | 16.1% | | | 2339 | DESCALVAD138 | 1 | 15.6 | 5.0 | 16.6 | | | 07 |
| 686 | 1 | 0 | 1.002 | 0.0 | 0.0 | 0.0 | 0.0 | 0.0 | 0.0 | | | | | | | | | |
| DOISCO-YP138 | | | -91.6 | 0.0 | 0.0 | 0.0 | 0.0 | 0.0 | 0.0 | | | | | | | | | |
| | | | | | | | 75.7% | | | 635 | BBONITA--138 | 1 | -60.7 | 1.0 | 60.6 | | | |
| | | | | | | | 62.9% | | | 1939 | BROTAS-Y-138 | 1 | 50.3 | -4.0 | 50.3 | | | |
| | | | | | | | 43.2% | | | 2338 | DOISCORRE138 | 1 | 10.4 | 3.0 | 10.8 | | | 07 |
| 687 | 1 | 0 | 1.027 | 0.0 | 0.0 | 0.0 | 0.0 | 0.0 | 0.0 | | | | | | | | | |
| EUCUNHA--138 | | | -93.8 | 0.0 | 0.0 | 0.0 | 0.0 | 0.0 | 0.0 | | | | | | | | | |
| | | | | | | | 79.4% | | | 522 | E.CUNHA--4GR | 1 | -87.0 | -13.9 | 85.8 | 1.004F | | 14 |
| | | | | | | | 51.7% | | | 683 | CACONDE--138 | 1 | -25.0 | -4.7 | 24.8 | | | |
| | | | | | | | 22.1% | | | 689 | ITAIPA-YP138 | 1 | 13.7 | 11.9 | 17.7 | | | |
| | | | | | | | 26.4% | | | 693 | LIMOEIRO-138 | 1 | 18.1 | 4.8 | 18.2 | | | |
| | | | | | | | 26.4% | | | 693 | LIMOEIRO-138 | 2 | 18.1 | 4.8 | 18.2 | | | |
| | | | | | | | 17.7% | | | 705 | SJBVIS-2-138 | 1 | 11.6 | -4.8 | 12.2 | | | |
| | | | | | | | 78.6% | | | 1986 | MOCOCA-Y-138 | 1 | 37.4 | 10.1 | 37.7 | | | |
| | | | | | | | 21.4% | | | 2003 | SJRPARD-Y138 | 1 | -9.5 | -4.5 | 10.3 | | | |
| | | | | | | | 32.3% | | | 2010 | VGSUL-Y--138 | 1 | 22.6 | -3.6 | 22.3 | | | |



ANUAL 06/07 * SETEMBRO 2006 PESADA S/SE 19H N/NE 19H * ANAT0 - FSE - C13
RELATORIO COMPLETO DO SISTEMA * AREA 6 * * C T E E P - DISTRIBUICAO *

X---------- D A D O S - B A R R A ----------X---------- F L U X O S - C I R C U I T O S ----------X
DA BARRA TENSAO GERACAO INJ EQV CARGA ELO CC SHUNT MOTOR
NUM. KV TIPO MOD/ MW/ MW/ MW/ MW/ Mvar/ MW/ PARA BARRA FLUXOS
NOME ANG Mvar Mvar Mvar Mvar EQUIV Mvar

```
                                                  FLUXO % SHUNT L          NUM.     NOME     NC     MW    Mvar  MVA/V_d   TAP  DEFAS TIE
X------------X-------X-------X-------X-------X-------X-------X-------X----X------------X--X-------X-------X-------X------X-----X---X

  689    1  0   1.003     0.0     0.0     0.0     0.0     0.0     0.0
 ITAIPA-YP138   -94.4     0.0     0.0     0.0     0.0     0.0     0.0
                                                 25.1%                  687 EUCUNHA--138  1   -13.6   -14.9    20.1
                                                 19.5%                 2343 ITAIP+CJU138  1    13.6    14.9    20.1               07
  692    1  0   1.008     0.0     0.0     0.0     0.0    18.3     0.0
 LIMEIR-1-138   -96.4     0.0     0.0     0.0     0.0     0.0     0.0
                                                 57.9%                  566 MMIRIM-3-138  1   -45.7    -9.6    46.4               05
                                                 39.7%                  569 S.BARB-1-138  1   -37.7    -7.6    38.1               05
                                                 53.6%                  701 RCLARO-1-138  1    33.4    27.5    42.9
                                                 53.0%                 1962 MVARGA-Y-138  1   -41.8    -8.8    42.4
                                                 49.6%                 1963 IRACEMA1Y138  1    35.0    19.4    39.7
                                                 20.3%                 1978 LIMEIR-4Y138  1    18.7    -6.2    19.5
                                                  0.4%                 3810 LIMEIR_1_138  1    38.2     3.5    38.1               30
  693    1  0   1.025     0.0     0.0     0.0     0.0     0.0     0.0
 LIMOEIRO-138   -93.9     0.0     0.0     0.0     0.0     0.0     0.0
                                                 67.3%                  523 LIMOEIRO-2GR  1   -26.0    -9.2    26.9 1.004F        14
                                                 26.6%                  687 EUCUNHA--138  1   -18.1    -5.2    18.4
                                                 26.6%                  687 EUCUNHA--138  2   -18.1    -5.2    18.4
                                                 32.8%                  699 PFERREIRA138  1    22.8     8.1    23.6
                                                 55.6%                 1941 CBRANCA-Y138  1    39.3    11.6    40.0
  694    1  0   1.008     0.0     0.0     0.0     0.0    30.5     0.0
 MAIRIPORA138  -101.4     0.0     0.0     0.0     0.0     0.0     0.0
                                                 42.2%                  591 CABREUVA-138  1   -38.1   -14.7    40.5               05
                                                 65.2%                  595 S.ANGELO-138  1   -90.9     9.1    90.6               05
                                                 42.5%                  677 AEROGUA1Y138  1   -57.3    16.5    59.1
                                                 18.8%                  681 BRAGANCA-138  1    11.2     7.8    13.6
                                                 36.9%                  721 MAIRIPO-A-88  1    14.9    -0.7    14.8 1.021*
                                                 52.4%                 1936 ATIBAIA1Y138  1    36.3    11.3    37.7
                                                 37.4%                 1960 FMORATO1Y138  1    36.2    -1.7    35.9
                                                  0.2%                 3861 MAIRIPORA138  1    24.3     2.3    24.2               30
                                                 43.6%                 3865 STA_INES_138  1    31.7     0.3    31.4               30
                                                 43.6%                 3865 STA_INES_138  2    31.7     0.3    31.4               30
  695    1  0   1.022     0.0     0.0     0.0     0.0     0.0     0.0
 MGUACU---138   -95.4     0.0     0.0     0.0     0.0     0.0     0.0
                                                 60.5%                  566 MMIRIM-3-138  1   -85.3   -23.1    86.5               05
                                                 60.5%                  566 MMIRIM-3-138  2   -85.3   -23.1    86.5               05
                                                 55.0%                  696 MMIRIM-2-138  1    44.4     7.5    44.0
                                                 55.0%                  696 MMIRIM-2-138  2    44.4     7.5    44.0
                                                 10.9%                  705 SJBVIS-2-138  1    -8.9     0.0     8.7
                                                 36.5%                 1982 MGUACU-2Y138  1    25.8    15.0    29.2
                                                 45.8%                 3816 MGUACU_1_138  1    65.0    16.1    65.6               30
CEPEL - CENTRO DE PESQUISAS DE ENERGIA ELETRICA - PROGRAMA DE ANALISE DE REDES - V08MAR05A                                  PAG. 119

ANUAL 06/07 * SETEMBRO 2006 PESADA S/SE 19H N/NE 19H * ANAT0 - FSE - C13
RELATORIO COMPLETO DO SISTEMA * AREA  6 * *     C T E E P - DISTRIBUICAO     *

X----------------- D A D O S  -  B A R R A -------------------------X------------ F L U X O S  -  C I R C U I T O S ------------X
 DA BARRA      TENSAO GERACAO INJ EQV  CARGA   ELO CC  SHUNT    MOTOR
 NUM. KV TIPO   MOD/     MW/     MW/     MW/     MW/   Mvar/     MW/
     NOME       ANG     Mvar    Mvar    Mvar    Mvar   EQUIV    Mvar  PARA BARRA                    FLUXOS
                                                  FLUXO % SHUNT L          NUM.     NOME     NC     MW    Mvar  MVA/V_d   TAP  DEFAS TIE
X------------X-------X-------X-------X-------X-------X-------X-------X----X------------X--X-------X-------X-------X------X-----X---X

  696    1  0   1.019     0.0     0.0     0.0     0.0     0.0     0.0
 MMIRIM-2-138   -95.7     0.0     0.0     0.0     0.0     0.0     0.0
                                                 83.7%                  566 MMIRIM-3-138  1  -111.8   -23.6   112.2               05
                                                 83.7%                  566 MMIRIM-3-138  2  -111.8   -23.6   112.2               05
```

```
                                                   8.6%                569 S.BARB-1-138  1    -8.5    -0.1     8.4                05
                                                  65.0%                681 BRAGANCA-138  1    52.4    -7.5    52.0
                                                  55.1%                695 MGUACU---138  1   -44.3    -7.6    44.1
                                                  55.1%                695 MGUACU---138  2   -44.3    -7.6    44.1
                                            SUP  157.3%               1957 PEDREIRAY138  1   125.7    25.1   125.8
                                                  51.0%               1985 MMIRIM-1Y138  1    49.1    11.3    49.4
                                                  80.9%               2344 ITAPIRA--138  1    74.6    26.4    77.7                07
                                                   0.2%               3819 MMIRIM_2_138  1    18.9     7.2    19.9                30
  699    1  0   0.995     0.0     0.0     0.0     0.0     0.0     0.0
 PFERREIRA138   -95.7     0.0     0.0     0.0     0.0     0.0     0.0
                                                  31.8%                564 RIBPRETO-138  1   -34.1    -0.6    34.3                05
                                                  21.1%                685 DESCAL-YP138  1     4.5    16.2    16.9
                                                  35.1%                693 LIMOEIRO-138  1   -22.4   -11.4    25.3
                                                  15.8%                701 RCLARO-1-138  1    12.1    -3.4    12.6
                                                  22.2%                703 SAOCARLOS138  1   -14.2    10.4    17.7
                                                  76.2%               1949 PETROBRAY138  1    60.6     2.0    61.0
                                                  24.7%               1990 PIRASS2YA138  1   -13.7   -11.2    17.8
                                                  16.9%               2004 SRPASS4YA138  1   -16.1    -0.9    16.2
                                                   0.2%               3822 PFERREIRA138  1    23.4    -1.1    23.5                30
  700    1  0   1.019     0.0     0.0     0.0     0.0     0.0     0.0
 PINHAL-YP138   -95.3     0.0     0.0     0.0     0.0     0.0     0.0
                                                  26.9%                705 SJBVIS-2-138  1   -21.7    -3.0    21.5
                                                   7.5%               1997 REFINA-Y-138  1     5.8    -1.9     6.0
                                                  20.4%               2314 PINHAL---138  1    15.9     4.9    16.3                07
  701    1  0   0.988     0.0     0.0     0.0     0.0    17.6     0.0
 RCLARO-1-138   -97.1     0.0     0.0     0.0     0.0     0.0     0.0
                                                  51.4%                635 BBONITA--138  1   -40.2     5.6    41.1
                                                  54.7%                692 LIMEIR-1-138  1   -33.0   -27.9    43.7
                                                  15.3%                699 PFERREIRA138  1   -12.0    -1.2    12.2
                                                  32.9%                703 SAOCARLOS138  1   -24.3     9.3    26.3
                                                  69.4%               1932 ARARA-2-Y138  1    54.5     6.2    55.6
                                                  19.3%               1948 CORDEIRY-138  1     0.0   -15.3    15.5
                                                  41.3%               1996 RCLARO-2Y138  1    19.5    26.2    33.0
                                                  21.8%               2000 RCLARO3-Y138  1    -9.0    14.7    17.4
                                                   0.5%               3824 RCLARO_1_138  1    44.5     0.0    45.0                30
  702    1  0   0.981     0.0     0.0     0.0     0.0     0.0     0.0
 SCARLO-YP138   -94.8     0.0     0.0     0.0     0.0     0.0     0.0
                                                  22.7%                685 DESCAL-YP138  1    11.3   -13.8    18.2
                                                  52.2%                707 TECUMSEY-138  1   -40.7     4.6    41.7
                                                  39.2%               2346 SAOCARLOS138  1    29.4     9.2    31.4                07
CEPEL - CENTRO DE PESQUISAS DE ENERGIA ELETRICA - PROGRAMA DE ANALISE DE REDES - V08MAR05A                                   PAG. 120

ANUAL 06/07 * SETEMBRO 2006 PESADA S/SE 19H N/NE 19H * ANAT0 - FSE - C13
RELATORIO COMPLETO DO SISTEMA * AREA  6 * *     C T E E P - DISTRIBUICAO     *

X----------------- D A D O S  -  B A R R A -------------------------X------------ F L U X O S  -  C I R C U I T O S ------------X
 DA BARRA      TENSAO GERACAO INJ EQV  CARGA   ELO CC  SHUNT    MOTOR
 NUM. KV TIPO   MOD/     MW/     MW/     MW/     MW/   Mvar/     MW/
     NOME       ANG     Mvar    Mvar    Mvar    Mvar   EQUIV    Mvar  PARA BARRA                    FLUXOS
                                                FLUXO % SHUNT L         NUM.     NOME     NC     MW    Mvar  MVA/V_d   TAP  DEFAS TIE
X------------X-------X-------X-------X-------X-------X-------X-------X----X------------X--X-------X-------X-------X------X-----X---X

  703    1  0   0.985     0.0     0.0     0.0     0.0     0.0     0.0
 SAOCARLOS138   -94.1     0.0     0.0     0.0     0.0     0.0     0.0
                                                  96.3%                560 ARARAQUA-138  1  -102.2     6.4   104.0                05
                                                  96.3%                560 ARARAQUA-138  2  -102.2     6.4   104.0                05
                                                  25.1%                699 PFERREIRA138  1    14.4   -13.6    20.1
                                                  35.1%                701 RCLARO-1-138  1    24.8   -12.4    28.1
                                                  70.3%                704 VOLKSWAGY138  1    55.4    -1.0    56.3
                                                   9.8%               1939 BROTAS-Y-138  1    -6.0    -4.9     7.9
```

```
                                                 48.3%                 1996 RCLARO-2Y138  1    37.4    -6.7    38.6
                                                 52.9%                 2100 BVIST+IBA138  1    50.9    17.0    54.5                07
                                                 28.3%                 2133 PARAISO--138  1    27.4     8.8    29.2                07
  704    1  0   0.984     0.0     0.0     0.0     0.0     0.0     0.0
 VOLKSWAGY138   -94.2     0.0     0.0     0.0     0.0     0.0     0.0
                                                 70.3%                  703 SAOCARLOS138  1   -55.4     1.1    56.3
                                                 67.6%                  707 TECUMSEY-138  1    53.2    -1.8    54.0
                                                  2.3%                 2121 VOLKSWAGE138  1     2.2     0.7     2.3                07
  705    1  0   1.024     0.0     0.0     0.0     0.0     0.0     0.0
 SJBVIS-2-138   -94.7     0.0     0.0     0.0     0.0     0.0     0.0
                                                 19.9%                  170 P.CALDAS-138  1   -24.6    -1.2    24.1                01
                                                 19.9%                  170 P.CALDAS-138  2   -24.6    -1.2    24.1                01
                                                 15.2%                  566 MMIRIM-3-138  1   -13.3    -7.0    14.7                05
                                                 16.4%                  687 EUCUNHA--138  1   -11.5     1.5    11.3
                                                 11.5%                  695 MGUACU---138  1     8.9    -3.0     9.2
                                                 26.7%                  700 PINHAL-YP138  1    21.8     1.9    21.4
                                                 16.8%                 1926 AGUAI-1Y-138  1    16.5     2.6    16.3
                                                 39.1%                 1959 ELFUSA-Y-138  1    26.8     6.5    27.0
  707    1  0   0.982     0.0     0.0     0.0     0.0     0.0     0.0
 TECUMSEY-138   -94.5     0.0     0.0     0.0     0.0     0.0     0.0
                                                 52.2%                  702 SCARLO-YP138  1    40.8    -4.7    41.8
                                                 67.5%                  704 VOLKSWAGY138  1   -53.1     1.8    54.0
                                                 16.1%                 2550 TECUMSEH-138  1    12.3     2.9    12.9                07
  708    1  0   1.047     0.0     0.0     0.0     0.0     0.0     0.0
 PETROM-Y-138   -94.5     0.0     0.0     0.0     0.0     0.0     0.0
                                                 50.0%                  595 S.ANGELO-138  1   -50.3     0.3    48.0                05
                                                 44.4%                  710 BIRITIBAY138  1    44.6    -2.2    42.7
                                                  0.1%                 3048 PETROM---138  1     5.7     1.9     5.7                29
CEPEL - CENTRO DE PESQUISAS DE ENERGIA ELETRICA - PROGRAMA DE ANALISE DE REDES - V08MAR05A                                PAG. 121

ANUAL 06/07 * SETEMBRO 2006 PESADA S/SE 19H N/NE 19H * ANAT0 - FSE - C13
RELATORIO COMPLETO DO SISTEMA * AREA  6 * *     C T E E P - DISTRIBUICAO     *

X------------------ D A D O S  -  B A R R A -------------------------X------------- F L U X O S  -  C I R C U I T O S -------------X
 DA BARRA      TENSAO GERACAO INJ EQV  CARGA   ELO CC  SHUNT    MOTOR
 NUM. KV TIPO   MOD/     MW/     MW/     MW/     MW/   Mvar/     MW/
     NOME       ANG     Mvar    Mvar    Mvar    Mvar   EQUIV    Mvar  PARA BARRA                    FLUXOS
                                                FLUXO % SHUNT L        NUM.     NOME     NC     MW    Mvar  MVA/V_d   TAP  DEFAS TIE
X------------X-------X-------X-------X-------X-------X-------X-------X----X------------X--X-------X-------X-------X------X-----X---X

  709    1  0   1.040     0.0     0.0     0.0     0.0     0.0     0.0
 BERTIO-2-138   -95.4     0.0     0.0     0.0     0.0     0.0     0.0
                                                 31.8%                  595 S.ANGELO-138  1   -31.7    -2.0    30.6                05
                                                 30.0%                  726 SIFAO 22Y138  1   -29.9    -1.3    28.8
                                                 22.2%                  730 SSEBASTIA138  1    20.2    -9.0    21.3
                                                  5.3%                  734 V.CARVAL-138  1    -3.7     3.9     5.1
                                                  6.2%                  734 V.CARVAL-138  2    -4.1     4.6     5.9
                                                  6.4%                 2011 BERTIO-1Y138  1     5.0     3.9     6.1
                                                 27.9%                 2012 GUARATUBY138  1    27.1    -6.2    26.7
                                                 13.5%                 2015 GUARUJ-2Y138  1    11.0     7.8    12.9
                                                  0.1%                 3845 BERTIO_2_138  1     6.1    -1.7     6.1                30
  710    1  0   1.043     0.0     0.0     0.0     0.0     0.0     0.0
 BIRITIBAY138   -95.3     0.0     0.0     0.0     0.0     0.0     0.0
                                                 44.4%                  708 PETROM-Y-138  1   -44.4     1.9    42.6
                                                 28.1%                  725 RIOPARDO-138  1    27.0    -7.8    26.9
                                                  0.2%                 3051 BIRITIBA-138  1    17.4     5.9    17.6                29
  711    1  0   1.035     0.0     0.0     0.0     0.0     0.0     0.0
 BOISUCANY138   -97.4     0.0     0.0     0.0     0.0     0.0     0.0
                                                 13.3%                  730 SSEBASTIA138  1     9.7    -9.0    12.8
                                                 24.2%                 2012 GUARATUBY138  1   -23.6     4.6    23.2
```

```
                                                  0.1%                 3054 BOISSUC.-138  1    13.9     4.4    14.1                29
 712    1  0   1.041     0.0     0.0     0.0     0.0     0.0     0.0
CARAGUA--138   -98.7     0.0     0.0     0.0     0.0     0.0     0.0
                                                 72.9%                  713 CARAGUAT--88  1    19.4   -23.3    29.1 1.172*
                                                 28.9%                  730 SSEBASTIA138  1   -25.0    14.4    27.7
                                                 28.9%                  730 SSEBASTIA138  2   -25.0    14.4    27.7
                                                 13.0%                 2018 UBATUBA1-138  1    12.6    -3.1    12.5
                                                 18.1%                 2025 MASAGUACY138  1    17.9    -2.4    17.4
 713    1  0   0.956     0.0     0.0     0.0     0.0     0.0     0.0
CARAGUAT--88  -101.9     0.0     0.0     0.0     0.0     0.0     0.0
                                                 85.4%                  712 CARAGUA--138  1   -19.4    26.2    34.2
                                                 37.1%                  724 PARAIBUNA-88  1    -4.6   -17.5    18.9
                                                 37.1%                  724 PARAIBUNA-88  2    -4.6   -17.5    18.9
                                                  0.3%                 3057 CARAGUA.--88  1    28.7     8.7    31.4                29
 716    1  0   0.991     0.0     0.0     0.0     0.0     0.0     0.0
JAMBEIROY-88  -102.9     0.0     0.0     0.0     0.0     0.0     0.0
                                                 18.1%                  717 EMBRAER-Y-88  1     8.9    -2.2     9.2
                                                 20.7%                  724 PARAIBUNA-88  1   -10.4     1.3    10.6
                                                  0.0%                 3060 JAMBEIRO--88  1     1.5     0.9     1.8                29
CEPEL - CENTRO DE PESQUISAS DE ENERGIA ELETRICA - PROGRAMA DE ANALISE DE REDES - V08MAR05A                                  PAG. 122

ANUAL 06/07 * SETEMBRO 2006 PESADA S/SE 19H N/NE 19H * ANAT0 - FSE - C13
RELATORIO COMPLETO DO SISTEMA * AREA  6 * *     C T E E P - DISTRIBUICAO     *

X----------------- D A D O S  -  B A R R A ------------------------X------------ F L U X O S  -  C I R C U I T O S ------------X
 DA BARRA      TENSAO GERACAO INJ EQV  CARGA   ELO CC  SHUNT    MOTOR
 NUM. KV TIPO   MOD/     MW/     MW/     MW/     MW/   Mvar/     MW/
     NOME       ANG     Mvar    Mvar    Mvar    Mvar   EQUIV    Mvar  PARA BARRA                    FLUXOS
                                                FLUXO % SHUNT L         NUM.     NOME     NC     MW    Mvar  MVA/V_d   TAP  DEFAS TIE
X------------X-------X-------X-------X-------X-------X-------X-------X----X------------X--X-------X-------X-------X------X-----X---X

 717    1  0   0.990     0.0     0.0     0.0     0.0     0.0     0.0
EMBRAER-Y-88  -103.3     0.0     0.0     0.0     0.0     0.0     0.0
                                                 18.0%                  716 JAMBEIROY-88  1    -8.9     1.9     9.2
                                                 10.4%                  720 JAGUARI---88  1     0.8    -5.1     5.2
                                                  0.1%                 3063 EMBRAER---88  1     8.1     3.2     8.8                29
 720    1  0   0.997     0.0     0.0     0.0     0.0     0.0     0.0
JAGUARI---88  -103.6     0.0     0.0     0.0     0.0     0.0     0.0
                                                 71.4%                  525 JAGUARI--2GR  1   -22.0   -10.1    24.3 1.000F        08
                                                  8.9%                  717 EMBRAER-Y-88  1    -0.8     4.4     4.5
                                                  2.1%                  721 MAIRIPO-A-88  1     0.7     0.6     1.0
                                                  9.5%                  727 SJCAMP-Y1-88  1    -4.7     0.2     4.8
                                                 59.3%                  731 CEBRASP-Y-88  1    26.8     4.9    27.3
 721    1  0   0.990     0.0     0.0     0.0     0.0     0.0     0.0
MAIRIPO-A-88  -103.6     0.0     0.0     0.0     0.0     0.0     0.0
                                                 37.7%                  694 MAIRIPORA138  1   -14.9     1.3    15.1
                                                  5.3%                  720 JAGUARI---88  1    -0.7    -2.3     2.4
                                                 34.3%                  729 SKOL-YE-- 88  1    15.6     1.0    15.8
 723    1  0   1.038     0.0     0.0     0.0     0.0     0.0     0.0
MANAH-YE-138   -93.9     0.0     0.0     0.0     0.0     0.0     0.0
                                                 41.0%                  732 TBAIXADA-138  1   -64.2     0.6    61.9                05
                                                 33.2%                  734 V.CARVAL-138  1    51.9    -3.6    50.1
                                                  0.1%                 3066 MANAH--138    1    12.3     3.0    12.2                42
 724    1  0   0.994     0.0     0.0     0.0     0.0     0.0     0.0
PARAIBUNA-88  -102.2     0.0     0.0     0.0     0.0     0.0     0.0
                                                 50.0%                  526 PARAIBUN-2GR  1   -47.0   -16.0    50.0 1.000F        08
                                                 35.5%                  713 CARAGUAT--88  1     4.9    17.3    18.1
                                                 35.5%                  713 CARAGUAT--88  2     4.9    17.3    18.1
                                                 20.8%                  716 JAMBEIROY-88  1    10.4    -1.6    10.6
                                                 52.4%                  728 SJCAMP-Y2-88  1    19.7   -17.1    26.2
```

```
                                                                0.1%                 3863 PARAIBUNA138  1     7.1     0.1     7.1                30
 725    1  0   1.039     0.0     0.0     0.0     0.0     0.0     0.0
RIOPARDO-138   -97.0     0.0     0.0     0.0     0.0     0.0     0.0
                                                               33.0%                  595 S.ANGELO-138  1   -32.7     3.8    31.7                05
                                                               27.3%                  710 BIRITIBAY138  1   -26.7     5.4    26.2
                                                               22.4%                  730 SSEBASTIA138  1    21.0    -7.6    21.5
                                                               22.4%                  730 SSEBASTIA138  2    21.0    -7.6    21.5
                                                                0.1%                 3069 PETRO-RPO138  1     6.0     1.4     5.9                29
                                                                0.1%                 3084 GLEBA D--138  1    11.4     4.6    11.8                29
CEPEL - CENTRO DE PESQUISAS DE ENERGIA ELETRICA - PROGRAMA DE ANALISE DE REDES - V08MAR05A                                          PAG. 123

ANUAL 06/07 * SETEMBRO 2006 PESADA S/SE 19H N/NE 19H * ANAT0 - FSE - C13
RELATORIO COMPLETO DO SISTEMA * AREA  6 * *     C T E E P - DISTRIBUICAO     *

X----------------- D A D O S  -  B A R R A -------------------------X------------ F L U X O S  -  C I R C U I T O S ------------X
 DA BARRA      TENSAO GERACAO INJ EQV  CARGA   ELO CC  SHUNT    MOTOR
 NUM. KV TIPO   MOD/     MW/     MW/     MW/     MW/   Mvar/     MW/
     NOME       ANG     Mvar    Mvar    Mvar    Mvar   EQUIV    Mvar  PARA BARRA                    FLUXOS
                                                FLUXO % SHUNT L         NUM.     NOME     NC     MW    Mvar  MVA/V_d   TAP  DEFAS TIE
X------------X-------X-------X-------X-------X-------X-------X-------X----X------------X--X-------X-------X-------X------X-----X---X

 726    1  0   1.044     0.0     0.0     0.0     0.0     0.0     0.0
SIFAO 22Y138   -94.8     0.0     0.0     0.0     0.0     0.0     0.0
                                                               33.2%                  595 S.ANGELO-138  1   -33.2    -1.9    31.9                05
                                                               30.0%                  709 BERTIO-2-138  1    30.0     0.6    28.8
                                                                0.0%                 3072 SIFAO 22-138  1     3.2     1.3     3.3                29
 727    1  0   0.999     0.0     0.0     0.0     0.0     0.0     0.0
SJCAMP-Y1-88  -103.2     0.0     0.0     0.0     0.0     0.0     0.0
                                                                9.6%                  455 SAO JOSE-088  1    -4.7     0.8     4.8                04
                                                                9.6%                  720 JAGUARI---88  1     4.7    -0.8     4.8
 728    1  0   0.997     0.0     0.0     0.0     0.0     0.0     0.0
SJCAMP-Y2-88  -102.6     0.0     0.0     0.0     0.0     0.0     0.0
                                                               52.2%                  455 SAO JOSE-088  1    19.6   -17.2    26.1                04
                                                               52.2%                  724 PARAIBUNA-88  1   -19.6    17.2    26.1
 729    1  0   0.982     0.0     0.0     0.0     0.0     0.0     0.0
SKOL-YE-- 88  -104.7     0.0     0.0     0.0     0.0     0.0     0.0
                                                               34.4%                  721 MAIRIPO-A-88  1   -15.5    -1.2    15.8
                                                                7.7%                 2022 SISABEL-Y-88  1     3.5     0.1     3.5
                                                                0.1%                 3075 SKOL------88  1    12.0     1.1    12.3                29
 730    1  0   1.038     0.0     0.0     0.0     0.0     0.0     0.0
SSEBASTIA138   -97.8     0.0     0.0     0.0     0.0     0.0     0.0
                                                               20.4%                  709 BERTIO-2-138  1   -19.9     4.2    19.6
                                                               12.2%                  711 BOISUCANY138  1    -9.7     7.4    11.7
                                                               29.6%                  712 CARAGUA--138  1    25.1   -15.4    28.4
                                                               29.6%                  712 CARAGUA--138  2    25.1   -15.4    28.4
                                                               21.9%                  725 RIOPARDO-138  1   -20.9     6.1    21.0
                                                               21.9%                  725 RIOPARDO-138  2   -20.9     6.1    21.0
                                                                0.1%                 3078 S.SEBAST.138  1    13.0     5.1    13.5                29
                                                                0.1%                 3857 ILHABELA_138  1     8.1     1.8     8.0                30
 731    1  0   0.997     0.0     0.0     0.0     0.0     0.0     0.0
CEBRASP-Y-88  -103.7     0.0     0.0     0.0     0.0     0.0     0.0
                                                               59.3%                  720 JAGUARI---88  1   -26.8    -4.9    27.3
                                                                0.2%                 2021 IGARAT-Y-138  1    20.2     3.0    20.4
                                                                0.1%                 3081 CEBRASP---88  1     6.6     1.9     6.9                29
 734    1  0   1.035     0.0     0.0     0.0     0.0     0.0     0.0
V.CARVAL-138   -95.0     0.0     0.0     0.0     0.0     0.0     0.0
                                                                8.1%                  709 BERTIO-2-138  1     3.7    -7.2     7.8
                                                                8.7%                  709 BERTIO-2-138  2     4.1    -7.6     8.3
                                                               33.1%                  723 MANAH-YE-138  1   -51.7     3.4    50.1
                                                               35.4%                  732 TBAIXADA-138  1   -55.3     2.7    53.4                05
```

```
                                                 9.5%                 2011 BERTIO-1Y138  1     6.1    -7.1     9.1
                                                70.3%                 2013 DOWQUIM-Y138  1    69.4     8.0    67.5
                                                 0.2%                 3087 VCARV--013    1    23.7     7.8    24.1                42
CEPEL - CENTRO DE PESQUISAS DE ENERGIA ELETRICA - PROGRAMA DE ANALISE DE REDES - V08MAR05A                                PAG. 124

ANUAL 06/07 * SETEMBRO 2006 PESADA S/SE 19H N/NE 19H * ANAT0 - FSE - C13
RELATORIO COMPLETO DO SISTEMA * AREA  6 * *     C T E E P - DISTRIBUICAO     *

X----------------- D A D O S  -  B A R R A -------------------------X------------ F L U X O S  -  C I R C U I T O S ------------X
 DA BARRA      TENSAO GERACAO INJ EQV  CARGA   ELO CC  SHUNT    MOTOR
 NUM. KV TIPO   MOD/     MW/     MW/     MW/     MW/   Mvar/     MW/
     NOME       ANG     Mvar    Mvar    Mvar    Mvar   EQUIV    Mvar  PARA BARRA                    FLUXOS
                                                FLUXO % SHUNT L        NUM.     NOME     NC     MW    Mvar  MVA/V_d   TAP  DEFAS TIE
X------------X-------X-------X-------X-------X-------X-------X-------X----X------------X--X-------X-------X-------X------X-----X---X

  739    1  0   1.048     0.0     0.0     0.0     0.0     0.0     0.0
 PARELHEIY138   -94.6     0.0     0.0     0.0     0.0     0.0     0.0
                                                71.1%                  583 EMBUGUAC-138  1   -71.5    -0.8    68.2                05
                                                43.1%                  744 MONGAGU-Y138  1    41.7   -11.8    41.3
                                                 0.3%                 3739 PARELHEI-138  1    29.8    12.6    30.9                28
  740  138  0   1.054     0.0     0.0     0.0     0.0     0.0     0.0
 PERUIBPY-138  -100.8     0.0     0.0     0.0     0.0     0.0     0.0
                                                 3.2%                  746 PERUIBE--138  1    -2.9    -2.2     3.4
                                                 3.2%                 2029 ITANHA-Y-138  1     2.9     2.2     3.5
                                                 0.0%                 3937 PERUIBE2_138  1     0.0     0.0     0.0                30
  741    1  0   1.040     0.0     0.0     0.0     0.0    32.4     0.0
 ITAPETI2-138   -98.8     0.0     0.0     0.0     0.0     0.0     0.0
                                                28.6%                  624 CBONITO--138  1   -23.8     1.7    22.9                05
                                                28.6%                  624 CBONITO--138  2   -23.8     1.7    22.9                05
                                                36.9%                  742 ITAPETI2-088  1    14.1     1.5    13.7 1.050S
                                                33.0%                  742 ITAPETI2-088  2    13.7     1.5    13.2 1.050S
                                                21.4%                  748 TIETE----138  1   -20.6     5.5    20.5
                                                 8.6%                 2023 ALPARGA-Y138  1    -3.6     7.8     8.3
                                                20.8%                 2026 DURATEX-Y138  1   -16.8     3.9    16.6
                                                 0.4%                 3125 ITAPETININ-2  1    45.2    10.7    44.7                36
                                                 7.9%                 3916 ANGATUBA_138  1     7.8    -1.0     7.6                30
                                                 0.1%                 3916 ANGATUBA_138  2     7.8    -1.0     7.6                30
  742    1  0   0.988     0.0     0.0     0.0     0.0     0.0     0.0
 ITAPETI2-088  -100.2     0.0     0.0     0.0     0.0     0.0     0.0
                                                38.7%                  741 ITAPETI2-138  1   -14.1    -1.2    14.3
                                                34.7%                  741 ITAPETI2-138  2   -13.7    -1.1    13.9
                                                12.1%                  743 ITAPETI1-088  1     6.1    -0.3     6.1
                                                12.1%                  743 ITAPETI1-088  2     6.1    -0.3     6.1
                                                31.5%                 3126 ITAPETININ-1  1    15.6     2.9    16.1                36
  743    1  0   0.987     0.0     0.0     0.0     0.0     0.0     0.0
 ITAPETI1-088  -100.3     0.0     0.0     0.0     0.0     0.0     0.0
                                                12.0%                  742 ITAPETI2-088  1    -6.1     0.2     6.1
                                                12.0%                  742 ITAPETI2-088  2    -6.1     0.2     6.1
                                                33.2%                  745 M.ALTO FEPAS  1    12.1    -0.3    12.3
  744    1  0   1.054     0.0     0.0     0.0     0.0     5.3     0.0
 MONGAGU-Y138   -97.2     0.0     0.0     0.0     0.0     0.0     0.0
                                                42.2%                  739 PARELHEIY138  1   -41.4    10.4    40.5
                                                13.7%                 3927 MONGAGUA_138  1    13.5     3.0    13.1                30
                                                28.7%                 3938 ITANHA_2_138  1    27.9    -8.1    27.6                30
CEPEL - CENTRO DE PESQUISAS DE ENERGIA ELETRICA - PROGRAMA DE ANALISE DE REDES - V08MAR05A                                PAG. 125

ANUAL 06/07 * SETEMBRO 2006 PESADA S/SE 19H N/NE 19H * ANAT0 - FSE - C13
RELATORIO COMPLETO DO SISTEMA * AREA  6 * *     C T E E P - DISTRIBUICAO     *

X----------------- D A D O S  -  B A R R A -------------------------X------------ F L U X O S  -  C I R C U I T O S ------------X
```

```
 DA BARRA      TENSAO GERACAO INJ EQV  CARGA   ELO CC  SHUNT    MOTOR
 NUM. KV TIPO   MOD/     MW/     MW/     MW/     MW/   Mvar/     MW/
     NOME       ANG     Mvar    Mvar    Mvar    Mvar   EQUIV    Mvar  PARA BARRA                    FLUXOS
                                                FLUXO % SHUNT L         NUM.     NOME     NC     MW    Mvar  MVA/V_d   TAP  DEFAS TIE
X------------X-------X-------X-------X-------X-------X-------X-------X----X------------X--X-------X-------X-------X------X-----X---X

  745    1  0   0.986     0.0     0.0     0.0     0.0     0.0     0.0
 M.ALTO FEPAS  -100.5     0.0     0.0     0.0     0.0     0.0     0.0
                                               33.2%                  743 ITAPETI1-088  1   -12.1     0.3    12.3
                                               33.2%                 3929 TATUI_1__138  1    12.1    -0.3    12.3               30
  746    1  0   1.055     0.0     0.0     0.0     0.0    15.9     0.0
 PERUIBE--138  -100.8     0.0     0.0     0.0     0.0     0.0     0.0
                                               42.3%                  583 EMBUGUAC-138  1   -40.2    14.9    40.7               05
                                                2.8%                  740 PERUIBPY-138  1     2.9     1.3     3.0
                                                6.0%                  747 REGISTRO-138  1     4.4    -4.1     5.7
                                                0.2%                 3928 PERUIBE__138  1    25.0     6.4    24.5               30
                                               10.9%                 3936 MIRACATU_138  1     7.9    -2.5     7.9               30
  747    1  0   1.052     0.0     0.0     0.0     0.0    22.2     0.0
 REGISTRO-138  -101.4     0.0     0.0     0.0     0.0     0.0     0.0
                                               35.5%                  624 CBONITO--138  1   -27.9    10.7    28.4               05
                                               35.5%                  624 CBONITO--138  2   -27.9    10.7    28.4               05
                                                5.1%                  746 PERUIBE--138  1    -4.4    -2.7     4.9
                                                0.2%                 1929 REGISTRO-69   1    15.8     1.2    15.1 1.020*
                                                2.3%                 2030 JUQUIA-Y-138  1     1.7    -0.3     1.7
                                                0.4%                 3932 REGIS_138_69  1    42.6     2.5    40.5               30
  748    1  0   1.040     0.0     0.0     0.0     0.0    43.3     0.0
 TIETE----138   -96.4     0.0     0.0     0.0     0.0     0.0     0.0
                                               59.0%                  626 BOTUCATU-138  1   -53.1    25.4    56.6               05
                                               23.2%                  741 ITAPETI2-138  1    21.0   -10.0    22.3
                                               47.6%                 2041 ORIENTO-Y138  1   -38.0    28.5    45.7
                                               52.4%                 2042 PIRELLI-Y138  1    52.1    -4.3    50.3
                                                0.2%                 3931 TIETE____138  1    18.1     3.6    17.7               30
 1361    1  0   1.047     0.0     0.0     0.0     0.0     0.0     0.0
 CAV2--Y--138   -98.9     0.0     0.0     0.0     0.0     0.0     0.0
                                               74.2%                  591 CABREUVA-138  1   -74.9   -20.6    74.2               05
                                               74.2%                 1981 MELHORA-Y138  1    74.9    20.6    74.2
 1900    1  0   1.012     0.0     0.0     0.0     0.0     0.0     0.0
 ANDRAD-Y-138   -66.2     0.0     0.0     0.0     0.0     0.0     0.0
                                               81.7%                  543 3IRMAOS--138  1   -65.8    -6.4    65.3               05
                                               55.8%                 1908 MIRANDO-Y138  1    45.1     2.0    44.6
                                                0.2%                 3882 ANDRADI__138  1    20.7     4.4    20.9               30
 1901    1  0   1.035     0.0     0.0     0.0     0.0     0.0     0.0
 CARDOSO1Y138   -75.0     0.0     0.0     0.0     0.0     0.0     0.0
                                               27.9%                  537 AVERMELH-138  1   -39.1    -3.8    37.9               05
                                               70.4%                  674 VOTUPO-2-138  1    34.6     5.2    33.8
                                                4.2%                 1904 CARDOSO--138  1     4.4    -1.4     4.5
CEPEL - CENTRO DE PESQUISAS DE ENERGIA ELETRICA - PROGRAMA DE ANALISE DE REDES - V08MAR05A                                  PAG. 126

ANUAL 06/07 * SETEMBRO 2006 PESADA S/SE 19H N/NE 19H * ANAT0 - FSE - C13
RELATORIO COMPLETO DO SISTEMA * AREA  6 * *     C T E E P - DISTRIBUICAO     *

X----------------- D A D O S  -  B A R R A -------------------------X------------ F L U X O S  -  C I R C U I T O S ------------X
 DA BARRA      TENSAO GERACAO INJ EQV  CARGA   ELO CC  SHUNT    MOTOR
 NUM. KV TIPO   MOD/     MW/     MW/     MW/     MW/   Mvar/     MW/
     NOME       ANG     Mvar    Mvar    Mvar    Mvar   EQUIV    Mvar  PARA BARRA                    FLUXOS
                                                FLUXO % SHUNT L         NUM.     NOME     NC     MW    Mvar  MVA/V_d   TAP  DEFAS TIE
X------------X-------X-------X-------X-------X-------X-------X-------X----X------------X--X-------X-------X-------X------X-----X---X

 1902    1  0   1.030     0.0     0.0     0.0     0.0     0.0     0.0
 CARDOSO--69    -77.1     0.0     0.0     0.0     0.0     0.0     0.0
```

```
                                                 0.1%                 1904 CARDOSO--138  1   -10.8     0.9    10.6
                                                32.0%                 1913 CAR-Y-AUX-69  1    10.8    -0.9    10.6                30
 1903    1  0   1.036     0.0     0.0     0.0     0.0     0.0     0.0
 3LAGOAS-Y138   -63.6     0.0     0.0     0.0     0.0     0.0     0.0
                                                43.9%                 1853 Selviria-138  1    34.3   -12.2    35.1                26
                                                40.4%                 3901 T_LAGOAS_138  1    33.7     9.9    33.9                30
                                                82.1%                 4302 UTETLAG_138A  1   -68.0     2.2    65.7                41
 1904    1  0   1.035     0.0     0.0     0.0     0.0     0.0     0.0
 CARDOSO--138   -75.1     0.0     0.0     0.0     0.0     0.0     0.0
                                                 4.0%                 1901 CARDOSO1Y138  1    -4.4     0.0     4.3
                                                 0.1%                 1902 CARDOSO--69   1    10.8    -0.5    10.5 1.008*
                                                 0.1%                 3885 CARDO_138_69  1    -6.4     0.5     6.2                30
 1906    1  0   1.026     0.0     0.0     0.0     0.0     0.0     0.0
 FERNAND-Y138   -75.3     0.0     0.0     0.0     0.0     0.0     0.0
                                                50.6%                  649 JALES----138  1   -40.9     6.7    40.4
                                                19.2%                  674 VOTUPO-2-138  1    14.0    -7.2    15.4
                                                 0.3%                 3888 FERNANDO_138  1    26.9     0.5    26.2                30
 1907    1  0   1.040     0.0     0.0     0.0     0.0     0.0     0.0
 CASTILHOY138   -62.9     0.0     0.0     0.0     0.0     0.0     0.0
                                                11.2%                  543 3IRMAOS--138  1    -7.7    -5.2     9.0                05
                                                 7.6%                  578 DERV_JUP_TRI  1     4.2     4.7     6.1
                                                 0.0%                 3886 CASTILHO_138  1     3.5     0.5     3.4                30
 1908    1  0   0.995     0.0     0.0     0.0     0.0     0.0     0.0
 MIRANDO-Y138   -68.4     0.0     0.0     0.0     0.0     0.0     0.0
                                                41.3%                  673 VALPARAIS138  1    32.8     0.0    33.0
                                                55.9%                 1900 ANDRAD-Y-138  1   -44.4    -2.6    44.7
                                                 0.1%                 3893 MIRANDOP_138  1    11.6     2.5    11.9                30
 1909    1  0   1.031     0.0     0.0     0.0     0.0     0.0     0.0
 PBARRE-Y-138   -69.5     0.0     0.0     0.0     0.0     0.0     0.0
                                                60.8%                  647 ISOLTEIRA138  1   -48.2    14.0    48.6
                                                52.0%                  648 PIONEIRY-138  1    40.1   -15.3    41.6
                                                 0.1%                 3895 PBARRETO_138  1     8.1     1.3     8.0                30
 1910    1  0   1.031     0.0     0.0     0.0     0.0     0.0     0.0
 PDOESTE-Y138   -71.1     0.0     0.0     0.0     0.0     0.0     0.0
                                                50.7%                  648 PIONEIRY-138  1   -39.6    13.2    40.5
                                                43.2%                  649 JALES----138  1    32.5   -14.5    34.6
                                                 0.1%                 3894 P_DOESTE_138  1     7.1     1.3     7.0                30
CEPEL - CENTRO DE PESQUISAS DE ENERGIA ELETRICA - PROGRAMA DE ANALISE DE REDES - V08MAR05A                                PAG. 127

ANUAL 06/07 * SETEMBRO 2006 PESADA S/SE 19H N/NE 19H * ANAT0 - FSE - C13
RELATORIO COMPLETO DO SISTEMA * AREA  6 * *     C T E E P - DISTRIBUICAO     *

X----------------- D A D O S  -  B A R R A -------------------------X------------ F L U X O S  -  C I R C U I T O S ------------X
 DA BARRA      TENSAO GERACAO INJ EQV  CARGA   ELO CC  SHUNT    MOTOR
 NUM. KV TIPO   MOD/     MW/     MW/     MW/     MW/   Mvar/     MW/
     NOME       ANG     Mvar    Mvar    Mvar    Mvar   EQUIV    Mvar  PARA BARRA                    FLUXOS
                                                FLUXO % SHUNT L        NUM.     NOME     NC     MW    Mvar  MVA/V_d   TAP  DEFAS TIE
X------------X-------X-------X-------X-------X-------X-------X-------X----X------------X--X-------X-------X-------X------X-----X---X

 1911    1  0   1.007     0.0     0.0     0.0     0.0     0.0     0.0
 PIRAPO-1Y138   -66.0     0.0     0.0     0.0     0.0     0.0     0.0
                                                64.8%                  550 CAPIVARA-138  1   -49.0   -18.1    51.8                05
                                                40.4%                  659 PPRUDENTE138  1    29.8    13.1    32.4
                                                 0.2%                 3896 PIRAPOZI_138  1    19.1     4.9    19.6                30
 1912    1  0   1.012     0.0     0.0     0.0     0.0     0.0     0.0
 DRACENA--69    -71.2     0.0     0.0     0.0     0.0     0.0     0.0
                                                 0.1%                  639 DRACENA--138  1   -14.7    -3.6    15.0
                                                45.4%                 3876 TPAULISTA-69  1    14.7     3.6    15.0                30
 1914    1  0   1.028     0.0     0.0     0.0     0.0     0.0     0.0
 N.HORIZ--138   -78.9     0.0     0.0     0.0     0.0     0.0     0.0
```

```
                                                 20.2%                 638 CATAND-2-138  1    14.5     8.2    16.2
                                                 19.8%                3155 BORBOREMA138  1   -14.5    -7.5    15.8                35
                                                  0.0%                3156 NHORIZONT138  1     0.0    -0.7     0.7                35
 1917    1  0   1.025     0.0     0.0     0.0     0.0     0.0     0.0
 VOTUPO-1Y138   -76.4     0.0     0.0     0.0     0.0     0.0     0.0
                                                 47.5%                 665 SJRPRETO-138  1    39.0     0.7    38.0
                                                 86.4%                 674 VOTUPO-2-138  1   -70.8    -2.2    69.1
                                                  0.3%                3903 VOTUP_138_69  1    31.9     1.4    31.1                30
 1918    1  0   0.985     0.0     0.0     0.0     0.0     0.0     0.0
 FLOREST-Y138   -68.0     0.0     0.0     0.0     0.0     0.0     0.0
                                                 32.2%                 640 FLORIDA--138  1    25.3     2.4    25.8
                                                 27.2%                1919 ENEIDA-Y-138  1   -21.3    -2.4    21.8
                                                  0.0%                3180 UFLORESTA138  1    -4.0     0.0     4.1                35
 1919    1  0   0.986     0.0     0.0     0.0     0.0     0.0     0.0
 ENEIDA-Y-138   -67.7     0.0     0.0     0.0     0.0     0.0     0.0
                                                 27.1%                1918 FLOREST-Y138  1    21.3     2.1    21.7
                                                 29.7%                3172 PRUDENTII138  1   -23.3    -2.4    23.8                35
                                                  0.0%                3175 ENEIDA   138  1     2.0     0.3     2.1                35
 1920    1  0   0.929     0.0     0.0     0.0     0.0     0.0     0.0
 BASTOS-Y-138   -72.1     0.0     0.0     0.0     0.0     0.0     0.0
                                                  0.4%                3174 O CRUZ   138  1   -36.6   -16.7    43.3                35
                                                  0.1%                3190 BASTOS   138  1    10.9     5.7    13.2                35
                                                  0.3%                3191 TUPA     138  1    25.7    11.0    30.1                35
 1921   88 -1   0.983     0.0     0.0     0.0     0.0     0.0     0.0
 MARTIN-Y--88   -66.7     0.0     0.0     0.0     0.0     0.0     0.0
                                                 31.6%                 663 PPRUDENTE 88  1     3.5   -13.2    13.9
                                                 37.8%                1922 RANCHA-Y--88  1   -12.6    10.4    16.6
                                                 22.0%                3173 MARTINOPOL88  1     9.1     2.8     9.7                35
CEPEL - CENTRO DE PESQUISAS DE ENERGIA ELETRICA - PROGRAMA DE ANALISE DE REDES - V08MAR05A                                PAG. 128

ANUAL 06/07 * SETEMBRO 2006 PESADA S/SE 19H N/NE 19H * ANAT0 - FSE - C13
RELATORIO COMPLETO DO SISTEMA * AREA  6 * *     C T E E P - DISTRIBUICAO     *

X----------------- D A D O S  -  B A R R A -------------------------X------------- F L U X O S  -  C I R C U I T O S -------------X
 DA BARRA      TENSAO GERACAO INJ EQV  CARGA   ELO CC  SHUNT    MOTOR
 NUM. KV TIPO   MOD/     MW/     MW/     MW/     MW/   Mvar/     MW/
     NOME       ANG     Mvar    Mvar    Mvar    Mvar   EQUIV    Mvar  PARA BARRA                    FLUXOS
                                                FLUXO % SHUNT L        NUM.     NOME     NC     MW    Mvar  MVA/V_d   TAP  DEFAS TIE
X------------X-------X-------X-------X-------X-------X-------X-------X----X------------X--X-------X-------X-------X------X-----X---X

 1922   88 -1   0.975     0.0     0.0     0.0     0.0     0.0     0.0
 RANCHA-Y--88   -64.8     0.0     0.0     0.0     0.0     0.0     0.0
                                                 38.9%                1921 MARTIN-Y--88  1    12.8   -10.6    17.1
                                                 42.5%                3196 RANCHARIA 88  1    17.2     6.0    18.7                35
                                                 70.9%                9518 MARACAI-Y-88  1   -30.0     4.6    31.2                61
 1926    1  0   1.021     0.0     0.0     0.0     0.0     0.0     0.0
 AGUAI-1Y-138   -95.1     0.0     0.0     0.0     0.0     0.0     0.0
                                                 17.1%                 705 SJBVIS-2-138  1   -16.5    -3.7    16.6
                                                  3.3%                1955 MAHLE-Y--138  1     2.3     2.4     3.2
                                                  0.1%                3801 AGUAI____138  1    14.2     1.3    14.0                30
 1928    1  0   1.030     0.0     0.0     0.0     0.0     0.0     0.0
 JALES-69       -75.8     0.0     0.0     0.0     0.0     0.0     0.0
                                                  0.2%                 649 JALES----138  1   -21.7    -4.8    21.6
                                                 61.9%                3878 STAFESUL-69   1    13.7     3.2    13.6                30
                                                 24.0%                3879 POPULINA      1     8.0     1.6     7.9                30
 1929    1  0   1.030     0.0     0.0     0.0     0.0     0.0     0.0
 REGISTRO-69   -103.1     0.0     0.0     0.0     0.0     0.0     0.0
                                                  0.2%                 747 REGISTRO-138  1   -15.8    -0.7    15.4
                                                 46.7%                3940 PARIQUERA-69  1    15.8     0.7    15.4                30
 1930    1  0   1.030     0.0     0.0     0.0     0.0     0.0     0.0
```

```
 ITARARE2-69   -103.6     0.0     0.0     0.0     0.0     0.0     0.0
                                                0.2%                 621 ITARARE2-138  1   -23.8    -1.3    23.2
                                                0.1%                3946 ITARARE2_138  1    13.2     0.0    12.8              30
                                                3.0%                3947 ITARA-EK-69   1     0.8    -0.6     1.0              30
                                               29.5%                3948 ITAPORANGA    1     9.8     2.0     9.7              30
 1931    1  0   0.976     0.0     0.0     0.0     0.0     0.0     0.0
 ARARA-1-Y138   -98.4     0.0     0.0     0.0     0.0     0.0     0.0
                                               33.2%                1932 ARARA-2-Y138  1   -26.0    -0.2    26.6
                                                5.1%                1974 CRESCIUY-138  1    -3.8    -0.9     4.0
                                                0.3%                3802 ARARAS_1_138  1    29.8     1.1    30.5              30
 1932    1  0   0.977     0.0     0.0     0.0     0.0     0.0     0.0
 ARARA-2-Y138   -98.3     0.0     0.0     0.0     0.0     0.0     0.0
                                               69.6%                 701 RCLARO-1-138  1   -54.1    -6.0    55.7
                                               33.2%                1931 ARARA-1-Y138  1    26.0     0.0    26.6
                                                0.3%                3803 ARARAS_2_138  1    28.1     5.9    29.4              30
 1933    1  0   1.010     0.0     0.0     0.0     0.0     0.0     0.0
 ARTURNO-Y138   -96.3     0.0     0.0     0.0     0.0     0.0     0.0
                                                9.1%                1976 LIMEIR-2Y138  1    -7.5     4.7     8.8
                                               19.3%                1985 MMIRIM-1Y138  1   -17.0    -8.2    18.7
                                                0.2%                3804 ARTURNO__138  1    24.5     3.5    24.5              30
CEPEL - CENTRO DE PESQUISAS DE ENERGIA ELETRICA - PROGRAMA DE ANALISE DE REDES - V08MAR05A                              PAG. 129

ANUAL 06/07 * SETEMBRO 2006 PESADA S/SE 19H N/NE 19H * ANAT0 - FSE - C13
RELATORIO COMPLETO DO SISTEMA * AREA  6 * *     C T E E P - DISTRIBUICAO     *

X----------------- D A D O S  -  B A R R A -------------------------X------------ F L U X O S  -  C I R C U I T O S ------------X
 DA BARRA      TENSAO GERACAO INJ EQV  CARGA   ELO CC  SHUNT    MOTOR
 NUM. KV TIPO   MOD/     MW/     MW/     MW/     MW/   Mvar/     MW/
     NOME       ANG     Mvar    Mvar    Mvar    Mvar   EQUIV    Mvar  PARA BARRA                    FLUXOS
                                                FLUXO % SHUNT L         NUM.     NOME     NC     MW    Mvar  MVA/V_d   TAP  DEFAS TIE
X------------X-------X-------X-------X-------X-------X-------X-------X----X------------X--X-------X-------X-------X------X-----X---X

 1934    1  0   1.021     0.0     0.0     0.0     0.0     0.0     0.0
 ARUJA-Y--138   -98.0     0.0     0.0     0.0     0.0     0.0     0.0
                                               79.9%                 676 MANUELAPY138  1  -113.4     2.0   111.1
                                               77.6%                 677 AEROGUA1Y138  1    85.5    -4.6    83.9
                                                0.3%                3841 ARUJA____138  1    27.9     2.6    27.5              30
 1936    1  0   0.991     0.0     0.0     0.0     0.0     0.0     0.0
 ATIBAIA1Y138  -102.7     0.0     0.0     0.0     0.0     0.0     0.0
                                               53.2%                 694 MAIRIPORA138  1   -36.0   -12.1    38.3
                                               83.5%                1937 BOMJESU-Y138  1    66.0     5.3    66.8
                                               43.2%                1950 CRUZACO1Y138  1   -30.0     6.8    31.1
 1937    1  0   0.989     0.0     0.0     0.0     0.0     0.0     0.0
 BOMJESU-Y138  -102.9     0.0     0.0     0.0     0.0     0.0     0.0
                                               83.5%                1936 ATIBAIA1Y138  1   -65.9    -5.2    66.8
                                               50.9%                3842 ATIBAIA__138  1    42.1     4.6    42.8              30
                                               28.7%                3847 BJPERDOES138  1    23.9     0.5    24.1              30
 1939    1  0   0.990     0.0     0.0     0.0     0.0     0.0     0.0
 BROTAS-Y-138   -93.8     0.0     0.0     0.0     0.0     0.0     0.0
                                               62.7%                 686 DOISCO-YP138  1   -49.6     4.0    50.2
                                                8.4%                 703 SAOCARLOS138  1     6.0     2.9     6.7
                                               55.7%                2113  BROTAS-138   1    43.6    -6.9    44.5              07
 1941    1  0   1.013     0.0     0.0     0.0     0.0     0.0     0.0
 CBRANCA-Y138   -94.8     0.0     0.0     0.0     0.0     0.0     0.0
                                               56.0%                 693 LIMOEIRO-138  1   -39.1   -12.1    40.4
                                               35.9%                2001 SCPALME-Y138  1    24.6     9.2    25.9
                                               18.2%                3132 CASABRANCA--  1    14.5     2.9    14.6              36
 1947    1  0   1.029     0.0     0.0     0.0     0.0     0.0     0.0
 CONCHALY-138   -94.5     0.0     0.0     0.0     0.0     0.0     0.0
                                               73.6%                 566 MMIRIM-3-138  1   -59.4   -12.4    58.9              05
```

```
                                                   56.8%                 1962 MVARGA-Y-138  1    45.9     9.2    45.4
                                                    0.1%                 3805 CONCHAL__138  1    13.5     3.2    13.5                30
 1948    1  0   0.992     0.0     0.0     0.0     0.0     0.0     0.0
 CORDEIRY-138   -97.1     0.0     0.0     0.0     0.0     0.0     0.0
                                                   18.5%                  701 RCLARO-1-138  1     0.0    14.7    14.8
                                                   38.9%                 1963 IRACEMA1Y138  1   -24.8   -18.3    31.1
                                                    0.3%                 3806 CORDEIRO_138  1    24.8     3.6    25.3                30
 1949    1  0   0.990     0.0     0.0     0.0     0.0     0.0     0.0
 PETROBRAY138   -96.3     0.0     0.0     0.0     0.0     0.0     0.0
                                                   76.2%                  699 PFERREIRA138  1   -60.4    -1.8    61.0
                                                   76.1%                 1989 PIRASS-1Y138  1    60.3     1.7    60.9
                                                    0.0%                 3836 PIRASS_P_138  1     0.1     0.1     0.1                30
CEPEL - CENTRO DE PESQUISAS DE ENERGIA ELETRICA - PROGRAMA DE ANALISE DE REDES - V08MAR05A                                   PAG. 130

ANUAL 06/07 * SETEMBRO 2006 PESADA S/SE 19H N/NE 19H * ANAT0 - FSE - C13
RELATORIO COMPLETO DO SISTEMA * AREA  6 * *     C T E E P - DISTRIBUICAO     *

X----------------- D A D O S  -  B A R R A -------------------------X------------ F L U X O S  -  C I R C U I T O S ------------X
 DA BARRA      TENSAO GERACAO INJ EQV  CARGA   ELO CC  SHUNT    MOTOR
 NUM. KV TIPO   MOD/     MW/     MW/     MW/     MW/   Mvar/     MW/
     NOME       ANG     Mvar    Mvar    Mvar    Mvar   EQUIV    Mvar  PARA BARRA                    FLUXOS
                                                FLUXO % SHUNT L        NUM.     NOME     NC     MW    Mvar  MVA/V_d   TAP  DEFAS TIE
X------------X-------X-------X-------X-------X-------X-------X-------X----X------------X--X-------X-------X-------X------X-----X---X

 1950    1  0   0.991     0.0     0.0     0.0     0.0     0.0     0.0
 CRUZACO1Y138  -102.4     0.0     0.0     0.0     0.0     0.0     0.0
                                                   52.1%                  681 BRAGANCA-138  1   -37.1     2.5    37.5
                                                   43.3%                 1936 ATIBAIA1Y138  1    30.1    -7.0    31.2
                                                    0.1%                 3870 JARINU_C_138  1     7.0     4.5     8.4                30
 1954    1  0   1.008     0.0     0.0     0.0     0.0     0.0     0.0
 CUNIAO-1Y138   -96.6     0.0     0.0     0.0     0.0     0.0     0.0
                                                   31.0%                 1977 LIMEIR-3Y138  1   -29.7    -4.6    29.8
                                                    5.0%                 1978 LIMEIR-4Y138  1     4.2     2.4     4.8
                                                    0.3%                 3814 LIMEIR_5_138  1    25.5     2.2    25.4                30
 1955    1  0   1.021     0.0     0.0     0.0     0.0     0.0     0.0
 MAHLE-Y--138   -95.1     0.0     0.0     0.0     0.0     0.0     0.0
                                                   35.8%                  566 MMIRIM-3-138  1   -33.3   -12.4    34.8                05
                                                    3.7%                 1926 AGUAI-1Y-138  1    -2.3    -2.9     3.6
                                                   45.1%                 3815 MGUACU_M_138  1    35.5    15.2    37.9                30
 1957    1  0   0.957     0.0     0.0     0.0     0.0     0.0     0.0
 PEDREIRAY138  -102.0     0.0     0.0     0.0     0.0     0.0     0.0
                                                   46.9%                  680 AMPARO-YP138  1    33.0   -14.0    37.5
                                                SUP  157.7%                  696 MMIRIM-2-138  1  -120.1   -12.7   126.2
                                                SUP  118.9%                 1999 SAPOSSE1Y138  1    87.0    26.7    95.1
 1958    1  0   0.928     0.0     0.0     0.0     0.0     0.0     0.0
 PEDREIRA-CJE  -104.2     0.0     0.0     0.0     0.0     0.0     0.0
                                                   63.0%                 1968 JAGRIUN-Y138  1    44.5    14.3    50.4
                                                SUP  111.0%                 1999 SAPOSSE1Y138  1   -79.0   -23.4    88.8
                                                    0.4%                 3135 PEDREIRA----  1    34.5     9.1    38.4                36
 1959    1  0   1.021     0.0     0.0     0.0     0.0     0.0     0.0
 ELFUSA-Y-138   -95.0     0.0     0.0     0.0     0.0     0.0     0.0
                                                   39.2%                  705 SJBVIS-2-138  1   -26.8    -6.8    27.1
                                                   34.6%                 2002 SJBVIS-1Y138  1    23.5     6.5    23.9
                                                    0.0%                 3807 SJBV_E___138  1     3.3     0.3     3.2                30
 1960    1  0   1.003     0.0     0.0     0.0     0.0     0.0     0.0
 FMORATO1Y138  -102.3     0.0     0.0     0.0     0.0     0.0     0.0
                                                   37.4%                  694 MAIRIPORA138  1   -35.9     1.1    35.9
                                                    9.3%                 1961 FROCHA-Y-138  1    -6.9    -5.8     9.0
                                                    0.4%                 3851 FMORATO__138  1    42.8     4.7    42.9                30
 1961    1  0   1.004     0.0     0.0     0.0     0.0     0.0     0.0
```

```
 FROCHA-Y-138  -102.3     0.0     0.0     0.0     0.0     0.0     0.0
                                                 9.0%                 1960 FMORATO1Y138  1     6.9     5.4     8.7
                                                48.4%                 1981 MELHORA-Y138  1   -46.0    -8.4    46.5
                                                 0.4%                 3852 FROCHA___138  1    39.1     3.0    39.0                30
CEPEL - CENTRO DE PESQUISAS DE ENERGIA ELETRICA - PROGRAMA DE ANALISE DE REDES - V08MAR05A                                PAG. 131

ANUAL 06/07 * SETEMBRO 2006 PESADA S/SE 19H N/NE 19H * ANAT0 - FSE - C13
RELATORIO COMPLETO DO SISTEMA * AREA  6 * *     C T E E P - DISTRIBUICAO     *

X----------------- D A D O S  -  B A R R A ------------------------X------------ F L U X O S  -  C I R C U I T O S ------------X
 DA BARRA      TENSAO GERACAO INJ EQV  CARGA   ELO CC  SHUNT    MOTOR
 NUM. KV TIPO   MOD/     MW/     MW/     MW/     MW/   Mvar/     MW/
     NOME       ANG     Mvar    Mvar    Mvar    Mvar   EQUIV    Mvar  PARA BARRA                    FLUXOS
                                                FLUXO % SHUNT L         NUM.     NOME     NC     MW    Mvar  MVA/V_d   TAP  DEFAS TIE
X------------X-------X-------X-------X-------X-------X-------X-------X----X------------X--X-------X-------X-------X------X-----X---X

 1962    1  0   1.023     0.0     0.0     0.0     0.0     0.0     0.0
 MVARGA-Y-138   -95.1     0.0     0.0     0.0     0.0     0.0     0.0
                                                52.6%                  692 LIMEIR-1-138  1    42.3     8.3    42.1
                                                57.0%                 1947 CONCHALY-138  1   -45.7    -9.4    45.6
                                                 0.0%                 3833 ECOELH_V_138  1     3.4     1.1     3.5                30
 1963    1  0   0.996     0.0     0.0     0.0     0.0     0.0     0.0
 IRACEMA1Y138   -97.0     0.0     0.0     0.0     0.0     0.0     0.0
                                                50.2%                  692 LIMEIR-1-138  1   -34.8   -19.8    40.2
                                                38.6%                 1948 CORDEIRY-138  1    24.9    18.1    30.9
                                                 0.1%                 3808 IRACEMA__138  1     9.9     1.7    10.1                30
 1968    1  0   0.927     0.0     0.0     0.0     0.0     0.0     0.0
 JAGRIUN-Y138  -104.3     0.0     0.0     0.0     0.0     0.0     0.0
                                                63.0%                 1958 PEDREIRA-CJE  1   -44.5   -14.3    50.4
                                                29.6%                 3136 JAGUARIUNA--  1    20.8     7.0    23.7                36
                                                23.5%                 3137 JAG-ANTARTIC  1    16.7     5.0    18.8                36
                                                 0.1%                 3138 HOLAMBRA-138  1     7.0     2.3     8.0                36
 1972    1  0   1.014     0.0     0.0     0.0     0.0     0.0     0.0
 JARINU-Y-138  -100.7     0.0     0.0     0.0     0.0     0.0     0.0
                                                43.2%                  575 B.JARDIM-138  1   -55.5   -29.0    61.7                05
                                                36.4%                  681 BRAGANCA-138  1    44.2    28.9    52.1
                                                 0.1%                 3858 JARINU___138  1    11.3     0.1    11.1                30
 1973    1  0   0.977     0.0     0.0     0.0     0.0     0.0     0.0
 LEME-Y---138   -98.3     0.0     0.0     0.0     0.0     0.0     0.0
                                                 5.2%                 1974 CRESCIUY-138  1     3.9    -1.3     4.1
                                                44.9%                 1989 PIRASS-1Y138  1   -35.1     0.3    35.9
                                                 0.3%                 3809 LEME_____138  1    31.2     1.0    32.0                30
 1974  138  0   0.977     0.0     0.0     0.0     0.0     0.0     0.0
 CRESCIUY-138   -98.3     0.0     0.0     0.0     0.0     0.0     0.0
                                                 4.9%                 1931 ARARA-1-Y138  1     3.9     0.1     3.9
                                                 5.1%                 1973 LEME-Y---138  1    -3.9     1.0     4.1
                                                 0.7%                 3838 CRESCIUM_138  1     0.0    -1.0     1.1                30
 1976    1  0   1.008     0.0     0.0     0.0     0.0     0.0     0.0
 LIMEIR-2Y138   -96.1     0.0     0.0     0.0     0.0     0.0     0.0
                                                 9.8%                 1933 ARTURNO-Y138  1     7.5    -6.0     9.5
                                                38.5%                 1998 RIPASA-Y-138  1   -37.5    -2.5    37.3
                                                 0.1%                 3811 LIMEIR_2_138  1     9.5     1.6     9.6                30
                                                 0.2%                 3834 LIMEIR_A_138  1    20.5     6.9    21.5                30
CEPEL - CENTRO DE PESQUISAS DE ENERGIA ELETRICA - PROGRAMA DE ANALISE DE REDES - V08MAR05A                                PAG. 132

ANUAL 06/07 * SETEMBRO 2006 PESADA S/SE 19H N/NE 19H * ANAT0 - FSE - C13
RELATORIO COMPLETO DO SISTEMA * AREA  6 * *     C T E E P - DISTRIBUICAO     *

X----------------- D A D O S  -  B A R R A ------------------------X------------ F L U X O S  -  C I R C U I T O S ------------X
 DA BARRA      TENSAO GERACAO INJ EQV  CARGA   ELO CC  SHUNT    MOTOR
```

```
 NUM. KV TIPO   MOD/     MW/     MW/     MW/     MW/   Mvar/     MW/
     NOME       ANG     Mvar    Mvar    Mvar    Mvar   EQUIV    Mvar  PARA BARRA                    FLUXOS
                                                FLUXO % SHUNT L         NUM.     NOME     NC     MW    Mvar  MVA/V_d   TAP  DEFAS TIE
X------------X-------X-------X-------X-------X-------X-------X-------X----X------------X--X-------X-------X-------X------X-----X---X

 1977    1  0   1.010     0.0     0.0     0.0     0.0     0.0     0.0
 LIMEIR-3Y138   -96.4     0.0     0.0     0.0     0.0     0.0     0.0
                                            67.6%                 569 S.BARB-1-138  1   -65.0    -8.2    64.9               05
                                            31.0%                1954 CUNIAO-1Y138  1    29.7     4.4    29.7
                                             0.4%                3812 LIMEIR_3_138  1    35.3     3.8    35.2               30
 1978    1  0   1.008     0.0     0.0     0.0     0.0     9.2     0.0
 LIMEIR-4Y138   -96.6     0.0     0.0     0.0     0.0     0.0     0.0
                                            20.2%                 692 LIMEIR-1-138  1   -18.7     5.8    19.4
                                             5.0%                1954 CUNIAO-1Y138  1    -4.2    -2.5     4.8
                                             0.2%                3813 LIMEIR_4_138  1    22.8     5.9    23.4               30
 1981    1  0   1.006     0.0     0.0     0.0     0.0     0.0     0.0
 MELHORA-Y138  -102.1     0.0     0.0     0.0     0.0     0.0     0.0
                                            74.8%                1361 CAV2--Y--138  1   -73.0   -18.1    74.8
                                            48.4%                1961 FROCHA-Y-138  1    46.0     8.3    46.5
                                            28.5%                3874 CAIEIR-Y-138  1    27.0     9.7    28.5               30
 1982    1  0   1.020     0.0     0.0     0.0     0.0     0.0     0.0
 MGUACU-2Y138   -95.5     0.0     0.0     0.0     0.0     0.0     0.0
                                            36.6%                 695 MGUACU---138  1   -25.7   -15.2    29.3
                                            19.6%                1997 REFINA-Y-138  1     9.2    13.1    15.7
                                             0.2%                3817 MGUACU_2_138  1    16.5     2.1    16.3               30
 1985    1  0   1.018     0.0     0.0     0.0     0.0     0.0     0.0
 MMIRIM-1Y138   -95.7     0.0     0.0     0.0     0.0     0.0     0.0
                                            51.0%                 696 MMIRIM-2-138  1   -49.1   -11.3    49.5
                                            18.5%                1933 ARTURNO-Y138  1    17.1     6.5    17.9
                                             0.3%                3818 MMIRIM_1_138  1    32.0     4.8    31.8               30
 1986    1  0   1.018     0.0     0.0     0.0     0.0     0.0     0.0
 MOCOCA-Y-138   -94.5     0.0     0.0     0.0     0.0     0.0     0.0
                                            79.1%                 687 EUCUNHA--138  1   -37.2   -10.5    38.0
                                             0.4%                3130 MOCOCA------  1    37.2    10.5    38.0               36
 1989    1  0   0.984     0.0     0.0     0.0     0.0     0.0     0.0
 PIRASS-1Y138   -97.2     0.0     0.0     0.0     0.0     0.0     0.0
                                            76.1%                1949 PETROBRAY138  1   -59.9    -1.4    60.9
                                            44.9%                1973 LEME-Y---138  1    35.3    -0.9    35.9
                                             0.3%                3820 PIRASS_1_138  1    24.6     2.3    25.1               30
 1990    1  0   1.001     0.0     0.0     0.0     0.0     0.0     0.0
 PIRASS2YA138   -95.5     0.0     0.0     0.0     0.0     0.0     0.0
                                            23.9%                 699 PFERREIRA138  1    13.7    10.4    17.2
                                            27.4%                2001 SCPALME-Y138  1   -16.6   -10.7    19.7
                                             0.0%                3821 PIRASS_2_138  1     2.9     0.3     2.9               30
CEPEL - CENTRO DE PESQUISAS DE ENERGIA ELETRICA - PROGRAMA DE ANALISE DE REDES - V08MAR05A                                PAG. 133

ANUAL 06/07 * SETEMBRO 2006 PESADA S/SE 19H N/NE 19H * ANAT0 - FSE - C13
RELATORIO COMPLETO DO SISTEMA * AREA  6 * *     C T E E P - DISTRIBUICAO     *

X----------------- D A D O S  -  B A R R A ------------------------X------------ F L U X O S  -  C I R C U I T O S ------------X
 DA BARRA      TENSAO GERACAO INJ EQV  CARGA   ELO CC  SHUNT    MOTOR
 NUM. KV TIPO   MOD/     MW/     MW/     MW/     MW/   Mvar/     MW/
     NOME       ANG     Mvar    Mvar    Mvar    Mvar   EQUIV    Mvar  PARA BARRA                    FLUXOS
                                                FLUXO % SHUNT L         NUM.     NOME     NC     MW    Mvar  MVA/V_d   TAP  DEFAS TIE
X------------X-------X-------X-------X-------X-------X-------X-------X----X------------X--X-------X-------X-------X------X-----X---X

 1996    1  0   0.974     0.0     0.0     0.0     0.0     0.0     0.0
 RCLARO-2Y138   -97.3     0.0     0.0     0.0     0.0     0.0     0.0
                                            42.3%                 701 RCLARO-1-138  1   -19.3   -26.7    33.8
                                            47.6%                 703 SAOCARLOS138  1   -36.7     5.4    38.1
```

```
                                                  0.6%                 3825 RCLARO_2_138  1    56.0    21.3    61.5                30
 1997    1  0   1.019     0.0     0.0     0.0     0.0     0.0     0.0
 REFINA-Y-138   -95.5     0.0     0.0     0.0     0.0     0.0     0.0
                                                  7.1%                  700 PINHAL-YP138  1    -5.8     0.4     5.7
                                                 19.8%                 1982 MGUACU-2Y138  1    -9.2   -13.2    15.8
                                                  0.2%                 3823 MGUACU_C_138  1    15.0    12.8    19.3                30
 1998    1  0   1.009     0.0     0.0     0.0     0.0     0.0     0.0
 RIPASA-Y-138   -96.0     0.0     0.0     0.0     0.0     0.0     0.0
                                                 79.2%                  569 S.BARB-1-138  1   -75.6   -17.2    76.8                05
                                                 38.5%                 1976 LIMEIR-2Y138  1    37.6     2.4    37.3
                                                  0.4%                 3835 LIMEIR_R_138  1    38.0    14.8    40.4                30
 1999    1  0   0.950     0.0     0.0     0.0     0.0     0.0     0.0
 SAPOSSE1Y138  -102.5     0.0     0.0     0.0     0.0     0.0     0.0
                                             SUP 119.0%                 1957 PEDREIRAY138  1   -86.6   -26.0    95.2
                                             SUP 110.6%                 1958 PEDREIRA-CJE  1    80.1    25.5    88.5
                                                  0.1%                 3830 SAPOSSE__138  1     6.5     0.5     6.9                30
 2000    1  0   0.985     0.0     0.0     0.0     0.0     0.0     0.0
 RCLARO3-Y138   -96.9     0.0     0.0     0.0     0.0     0.0     0.0
                                                 22.4%                  701 RCLARO-1-138  1     9.0   -15.2    17.9
                                                 41.8%                 2113  BROTAS-138   1   -31.8     8.5    33.4                07
                                                  0.2%                 3826 RCLARO_3_138  1    22.8     6.7    24.1                30
 2001    1  0   1.005     0.0     0.0     0.0     0.0     0.0     0.0
 SCPALME-Y138   -95.3     0.0     0.0     0.0     0.0     0.0     0.0
                                                 36.5%                 1941 CBRANCA-Y138  1   -24.4   -10.0    26.3
                                                 26.9%                 1990 PIRASS2YA138  1    16.6    10.1    19.4
                                                  0.1%                 3828 SCPALMEI_138  1     7.8    -0.1     7.8                30
 2002    1  0   1.021     0.0     0.0     0.0     0.0     0.0     0.0
 SJBVIS-1Y138   -95.0     0.0     0.0     0.0     0.0     0.0     0.0
                                                 34.6%                 1959 ELFUSA-Y-138  1   -23.5    -6.6    23.9
                                                 13.0%                 2010 VGSUL-Y--138  1    -8.7     2.9     9.0
                                                  0.3%                 3827 SJBVIS_1_138  1    32.2     3.7    31.8                30
 2003    1  0   1.028     0.0     0.0     0.0     0.0     0.0     0.0
 SJRPARD-Y138   -93.7     0.0     0.0     0.0     0.0     0.0     0.0
                                                 58.3%                  683 CACONDE--138  1   -28.4    -4.3    28.0
                                                 21.0%                  687 EUCUNHA--138  1     9.5     4.1    10.1
                                                  0.2%                 3133 SJRIOPARDO--  1    18.9     0.2    18.4                36
CEPEL - CENTRO DE PESQUISAS DE ENERGIA ELETRICA - PROGRAMA DE ANALISE DE REDES - V08MAR05A                                   PAG. 134

ANUAL 06/07 * SETEMBRO 2006 PESADA S/SE 19H N/NE 19H * ANAT0 - FSE - C13
RELATORIO COMPLETO DO SISTEMA * AREA  6 * *     C T E E P - DISTRIBUICAO     *

X----------------- D A D O S  -  B A R R A -------------------------X------------ F L U X O S  -  C I R C U I T O S ------------X
 DA BARRA      TENSAO GERACAO INJ EQV  CARGA   ELO CC  SHUNT    MOTOR
 NUM. KV TIPO   MOD/     MW/     MW/     MW/     MW/   Mvar/     MW/
     NOME       ANG     Mvar    Mvar    Mvar    Mvar   EQUIV    Mvar  PARA BARRA                    FLUXOS
                                                FLUXO % SHUNT L         NUM.     NOME     NC     MW    Mvar  MVA/V_d   TAP  DEFAS TIE
X------------X-------X-------X-------X-------X-------X-------X-------X----X------------X--X-------X-------X-------X------X-----X---X

 2004    1  0   0.997     0.0     0.0     0.0     0.0     0.0     0.0
 SRPASS4YA138   -95.3     0.0     0.0     0.0     0.0     0.0     0.0
                                                 39.5%                  564 RIBPRETO-138  1   -37.8     0.1    37.9                05
                                                 16.9%                  699 PFERREIRA138  1    16.2     0.1    16.2
                                                  0.1%                 3829 SRPASSA4_138  1    10.0     1.4    10.1                30
                                                  0.1%                 3831 TAMBAU___138  1    11.6    -1.6    11.8                30
 2006   88 -1   1.021     0.0     0.0     0.0     0.0     0.0     0.0
 PARPTA-Y--88   -64.8     0.0     0.0     0.0     0.0     0.0     0.0
                                                 62.6%                 2008 ASSIS3-Y--88  1    21.6   -18.0    27.6
                                                 35.0%                 3194 PARAGUA€U 88  1    15.0     4.8    15.4                35
                                                 86.6%                 9510 COCAL-Y  -88  1   -36.6    13.2    38.1
 2007   88 -1   1.018     0.0     0.0     0.0     0.0     0.0     0.0
```

```
 S.LINA-Y--88   -65.0     0.0     0.0     0.0     0.0     0.0     0.0
                                                10.0%                 3195 STA LINA  88  1     4.2     1.5     4.4                35
                                                10.0%                 9510 COCAL-Y  -88  1    -4.2    -1.5     4.4
 2008   88 -1   1.034     0.0     0.0     0.0     0.0     0.0     0.0
 ASSIS3-Y--88   -67.6     0.0     0.0     0.0     0.0     0.0     0.0
                                                53.7%                  554 ASSIS-----88  1     6.4   -23.6    23.6
                                                61.5%                 2006 PARPTA-Y--88  1   -21.0    18.5    27.1
                                                34.1%                 3193 ASSIS III 88  1    14.6     5.1    15.0                35
 2010    1  0   1.021     0.0     0.0     0.0     0.0     0.0     0.0
 VGSUL-Y--138   -94.8     0.0     0.0     0.0     0.0     0.0     0.0
                                                32.0%                  687 EUCUNHA--138  1   -22.4     2.0    22.0
                                                13.5%                 2002 SJBVIS-1Y138  1     8.7    -3.8     9.3
                                                 0.1%                 3832 VGSUL____138  1    13.7     1.8    13.5                30
 2011    1  0   1.039     0.0     0.0     0.0     0.0     0.0     0.0
 BERTIO-1Y138   -95.4     0.0     0.0     0.0     0.0     0.0     0.0
                                                 6.8%                  709 BERTIO-2-138  1    -5.0    -4.6     6.6
                                                 7.7%                  734 V.CARVAL-138  1    -6.1     4.6     7.4
                                                 0.1%                 3844 BERTIO_1_138  1    11.1     0.0    10.7                30
 2012    1  0   1.039     0.0     0.0     0.0     0.0     0.0     0.0
 GUARATUBY138   -95.9     0.0     0.0     0.0     0.0     0.0     0.0
                                                27.7%                  709 BERTIO-2-138  1   -27.0     5.5    26.6
                                                24.9%                  711 BOISUCANY138  1    23.8    -7.0    23.9
                                                 0.0%                 3846 BERTIO_3_138  1     3.1     1.5     3.3                30
                                                 0.0%                 3864 GUARATUBA138  1     0.1     0.0     0.1                30
 2013    1  0   1.031     0.0     0.0     0.0     0.0     0.0     0.0
 DOWQUIM-Y138   -95.5     0.0     0.0     0.0     0.0     0.0     0.0
                                                70.3%                  734 V.CARVAL-138  1   -69.2    -7.7    67.5
                                                64.9%                 2014 GUARUJ-1Y138  1    63.9     6.6    62.3
                                                 0.1%                 3869 GUARUJ_D_138  1     5.3     1.1     5.3                30
CEPEL - CENTRO DE PESQUISAS DE ENERGIA ELETRICA - PROGRAMA DE ANALISE DE REDES - V08MAR05A                                PAG. 135

ANUAL 06/07 * SETEMBRO 2006 PESADA S/SE 19H N/NE 19H * ANAT0 - FSE - C13
RELATORIO COMPLETO DO SISTEMA * AREA  6 * *     C T E E P - DISTRIBUICAO     *

X----------------- D A D O S  -  B A R R A ------------------------X------------ F L U X O S  -  C I R C U I T O S ------------X
 DA BARRA       TENSAO GERACAO INJ EQV  CARGA   ELO CC  SHUNT    MOTOR
 NUM. KV TIPO    MOD/     MW/     MW/     MW/     MW/   Mvar/     MW/
     NOME        ANG     Mvar    Mvar    Mvar    Mvar   EQUIV    Mvar  PARA BARRA                    FLUXOS
                                                FLUXO % SHUNT L         NUM.     NOME     NC     MW    Mvar  MVA/V_d   TAP  DEFAS TIE
X------------X-------X-------X-------X-------X-------X-------X-------X----X------------X--X-------X-------X-------X------X-----X---X

 2014    1  0   1.030     0.0     0.0     0.0     0.0     0.0     0.0
 GUARUJ-1Y138   -95.6     0.0     0.0     0.0     0.0     0.0     0.0
                                                64.9%                 2013 DOWQUIM-Y138  1   -63.8    -6.6    62.3
                                                26.4%                 2016 GUARUJ-3Y138  1    25.7    -4.4    25.3
                                                 0.4%                 3853 GUARUJA1_138  1    38.1    11.0    38.5                30
 2015    1  0   1.030     0.0     0.0     0.0     0.0     0.0     0.0
 GUARUJ-2Y138   -95.7     0.0     0.0     0.0     0.0     0.0     0.0
                                                14.8%                  709 BERTIO-2-138  1   -10.9    -9.7    14.2
                                                12.8%                 2016 GUARUJ-3Y138  1   -10.4     7.3    12.3
                                                 0.2%                 3854 GUARUJA2_138  1    21.3     2.5    20.8                30
 2016    1  0   1.030     0.0     0.0     0.0     0.0     0.0     0.0
 GUARUJ-3Y138   -95.6     0.0     0.0     0.0     0.0     0.0     0.0
                                                26.4%                 2014 GUARUJ-1Y138  1   -25.7     4.4    25.3
                                                13.0%                 2015 GUARUJ-2Y138  1    10.4    -7.6    12.5
                                                 0.2%                 3855 GUARUJA3_138  1    15.3     3.2    15.2                30
 2017    1  0   0.982     0.0     0.0     0.0     0.0     0.0     0.0
 KARIBE-Y--88  -104.6     0.0     0.0     0.0     0.0     0.0     0.0
                                                 0.2%                 2021 IGARAT-Y-138  1   -16.7    -3.0    17.3
                                                25.3%                 2022 SISABEL-Y-88  1    11.3     1.3    11.6
```

```
                                                  0.1%                  3859 SISABE_K_138  1     5.4     1.7     5.8                30
 2018    1  0   1.038     0.0     0.0     0.0     0.0     0.0     0.0
 UBATUBA1-138   -99.4     0.0     0.0     0.0     0.0     0.0     0.0
                                                 12.6%                   712 CARAGUA--138  1   -12.6     0.3    12.1
                                                  8.0%                  2019 UBATUBA2-138  1    -7.9     0.2     7.6
                                                  0.2%                  3866 UBATUBA1_138  1    20.5    -0.5    19.8                30
 2019    1  0   1.038     0.0     0.0     0.0     0.0     0.0     0.0
 UBATUBA2-138   -99.2     0.0     0.0     0.0     0.0     0.0     0.0
                                                  8.1%                  2018 UBATUBA1-138  1     7.9    -1.3     7.7
                                                 13.5%                  2025 MASAGUACY138  1   -13.3     1.9    13.0
                                                  0.1%                  3867 UBATUBA2_138  1     5.4    -0.6     5.2                30
 2021    1  0   0.989     0.0     0.0     0.0     0.0     0.0     0.0
 IGARAT-Y-138  -104.2     0.0     0.0     0.0     0.0     0.0     0.0
                                                  0.2%                   731 CEBRASP-Y-88  1   -20.0    -3.1    20.5
                                                  0.2%                  2017 KARIBE-Y--88  1    16.8     2.8    17.3
                                                  0.0%                  3868 IGARATA__138  1     3.2     0.3     3.2                30
 2022    1  0   0.980     0.0     0.0     0.0     0.0     0.0     0.0
 SISABEL-Y-88  -104.9     0.0     0.0     0.0     0.0     0.0     0.0
                                                  7.8%                   729 SKOL-YE-- 88  1    -3.5    -0.4     3.6
                                                 25.3%                  2017 KARIBE-Y--88  1   -11.3    -1.4    11.6
                                                  0.2%                  3856 SISABEL__138  1    14.8     1.8    15.2                30
CEPEL - CENTRO DE PESQUISAS DE ENERGIA ELETRICA - PROGRAMA DE ANALISE DE REDES - V08MAR05A                                   PAG. 136

ANUAL 06/07 * SETEMBRO 2006 PESADA S/SE 19H N/NE 19H * ANAT0 - FSE - C13
RELATORIO COMPLETO DO SISTEMA * AREA  6 * *     C T E E P - DISTRIBUICAO     *

X----------------- D A D O S  -  B A R R A ------------------------X------------ F L U X O S  -  C I R C U I T O S ------------X
 DA BARRA      TENSAO GERACAO INJ EQV  CARGA   ELO CC  SHUNT    MOTOR
 NUM. KV TIPO   MOD/     MW/     MW/     MW/     MW/   Mvar/     MW/
     NOME       ANG     Mvar    Mvar    Mvar    Mvar   EQUIV    Mvar  PARA BARRA                    FLUXOS
                                                FLUXO % SHUNT L         NUM.     NOME     NC     MW    Mvar  MVA/V_d   TAP  DEFAS TIE
X------------X-------X-------X-------X-------X-------X-------X-------X----X------------X--X-------X-------X-------X------X-----X---X

 2023    1  0   1.033     0.0     0.0     0.0     0.0     0.0     0.0
 ALPARGA-Y138   -98.5     0.0     0.0     0.0     0.0     0.0     0.0
                                                 10.9%                   741 ITAPETI2-138  1     3.7   -10.2    10.5
                                                 14.0%                  2044 TATUI-2Y-138  1   -11.4     7.9    13.4
                                                  0.1%                  3935 TATUI__A_138  1     7.7     2.3     7.8                30
 2024    1  0   1.033     0.0     0.0     0.0     0.0     0.0     0.0
 BURI-Y---138   -93.4     0.0     0.0     0.0     0.0     0.0     0.0
                                             SUP 100.4%                   624 CBONITO--138  1    70.8   -43.1    80.3                05
                                             SUP 106.1%                  2028 ITAI-Y---138  1   -76.3    43.0    84.8
                                                  0.1%                  3917 BURI_____138  1     5.5     0.1     5.3                30
 2025    1  0   1.039     0.0     0.0     0.0     0.0     0.0     0.0
 MASAGUACY138   -98.9     0.0     0.0     0.0     0.0     0.0     0.0
                                                 18.0%                   712 CARAGUA--138  1   -17.9     1.7    17.3
                                                 13.7%                  2019 UBATUBA2-138  1    13.4    -2.9    13.2
                                                  0.0%                  3090 MASSAG.--138  1     4.5     1.2     4.5                29
 2026    1  0   1.040     0.0     0.0     0.0     0.0     0.0     0.0
 DURATEX-Y138   -98.8     0.0     0.0     0.0     0.0     0.0     0.0
                                                 28.7%                   624 CBONITO--138  1   -23.8     1.8    23.0                05
                                                 20.8%                   741 ITAPETI2-138  1    16.8    -4.0    16.6
                                                  0.1%                  3127 DURATEX-----  1     7.0     2.2     7.1                36
 2028    1  0   1.025     0.0     0.0     0.0     0.0     0.0     0.0
 ITAI-Y---138   -89.9     0.0     0.0     0.0     0.0     0.0     0.0
                                             SUP 132.5%                   620 JURUMI-B-138  1  -102.8    34.9   106.0                05
                                             SUP 107.1%                  2024 BURI-Y---138  1    78.2   -39.9    85.7
                                                 45.4%                  3147 ITAI-2---138  1    24.6     5.0    24.5                37
 2029    1  0   1.052     0.0     0.0     0.0     0.0    10.6     0.0
 ITANHA-Y-138  -100.9     0.0     0.0     0.0     0.0     0.0     0.0
```

```
                                                 3.7%                740 PERUIBPY-138  1    -2.9    -3.1     4.0
                                                 0.2%               3923 ITANHAEM_138  1    24.8     4.4    23.9                30
                                                18.9%               3938 ITANHA_2_138  1   -21.9     9.3    22.6                30
 2030    1  0   1.051     0.0     0.0     0.0     0.0     0.0     0.0
 JUQUIA-Y-138  -101.5     0.0     0.0     0.0     0.0     0.0     0.0
                                                 3.5%                747 REGISTRO-138  1    -1.7    -2.0     2.5
                                                 0.0%               3925 JUQUIA___138  1     4.8     2.0     4.9                30
                                                 4.1%               3936 MIRACATU_138  1    -3.1     0.0     2.9                30
 2032    1  0   1.032     0.0     0.0     0.0     0.0     0.0     0.0
 LARANJA1Y138   -95.4     0.0     0.0     0.0     0.0     0.0     0.0
                                                62.5%                626 BOTUCATU-138  1   -56.7    24.7    60.0                05
                                                53.0%               2041 ORIENTO-Y138  1    45.2   -26.7    50.9
                                                 0.1%               3926 LPAULISTA138  1    11.5     2.0    11.3                30
CEPEL - CENTRO DE PESQUISAS DE ENERGIA ELETRICA - PROGRAMA DE ANALISE DE REDES - V08MAR05A                                PAG. 137

ANUAL 06/07 * SETEMBRO 2006 PESADA S/SE 19H N/NE 19H * ANAT0 - FSE - C13
RELATORIO COMPLETO DO SISTEMA * AREA  6 * *     C T E E P - DISTRIBUICAO     *

X----------------- D A D O S  -  B A R R A ------------------------X------------ F L U X O S  -  C I R C U I T O S ------------X
 DA BARRA      TENSAO GERACAO INJ EQV  CARGA   ELO CC  SHUNT    MOTOR
 NUM. KV TIPO   MOD/     MW/     MW/     MW/     MW/   Mvar/     MW/
     NOME       ANG     Mvar    Mvar    Mvar    Mvar   EQUIV    Mvar  PARA BARRA                    FLUXOS
                                                FLUXO % SHUNT L         NUM.     NOME     NC     MW    Mvar  MVA/V_d   TAP  DEFAS TIE
X------------X-------X-------X-------X-------X-------X-------X-------X----X------------X--X-------X-------X-------X------X-----X---X

 2033    1  0   1.036     0.0     0.0     0.0     0.0     0.0     0.0
 CESARIO-Y138   -97.4     0.0     0.0     0.0     0.0     0.0     0.0
                                                44.7%               2042 PIRELLI-Y138  1   -43.9     6.9    42.9
                                                36.9%               2044 TATUI-2Y-138  1    36.1    -6.7    35.5
                                                 9.0%               3920 CESARIO__138  1     7.8    -0.2     7.5                30
 2036    1  0   1.017     0.0     0.0     0.0     0.0     0.0     0.0
 BCAMPOS-Y-88   -81.1     0.0     0.0     0.0     0.0     0.0     0.0
                                                93.8%                616 CHAVANTES-88  1   -36.1     3.1    35.7                05
                                                52.1%               2040 BOTUCATU--88  1    14.6   -13.8    19.8
                                                78.7%               3146 B.CAMPOS--88  1    21.5    10.7    23.6                37
 2040    1  0   1.049     0.0     0.0     0.0     0.0     5.3     0.0
 BOTUCATU--88   -89.9     0.0     0.0     0.0     0.0     0.0     0.0
                                                53.9%                616 CHAVANTES-88  1   -17.8    12.0    20.5                05
                                                50.1%                626 BOTUCATU-138  1     1.1   -12.6    12.0 1.106*         05
                                                50.1%                626 BOTUCATU-138  2     1.1   -12.6    12.0 1.106*         05
                                                46.6%               2036 BCAMPOS-Y-88  1   -13.0    13.3    17.7
                                                60.3%               3921 CONCHAS__138  1    28.6     5.1    27.7                30
 2041    1  0   1.034     0.0     0.0     0.0     0.0     0.0     0.0
 ORIENTO-Y138   -95.7     0.0     0.0     0.0     0.0     0.0     0.0
                                                48.2%                748 TIETE----138  1    38.2   -28.8    46.2
                                                52.9%               2032 LARANJA1Y138  1   -45.2    26.7    50.7
                                                 0.1%               3934 LJALPT_A_138  1     7.0     2.1     7.1                30
 2042    1  0   1.037     0.0     0.0     0.0     0.0     0.0     0.0
 PIRELLI-Y138   -97.0     0.0     0.0     0.0     0.0     0.0     0.0
                                                52.3%                748 TIETE----138  1   -51.9     4.2    50.2
                                                44.8%               2033 CESARIO-Y138  1    44.0    -7.0    43.0
                                                 0.1%               3933 CERQUI_P_138  1     7.9     2.8     8.1                30
 2043    1  0   1.022     0.0     0.0     0.0     0.0     0.0     0.0
 OURIN-2-Y-88   -74.1     0.0     0.0     0.0     0.0     0.0     0.0
                                                68.3%                616 CHAVANTES-88  1    19.3   -23.9    30.1                05
                                            SUP 141.1%               2047 OURIN-G-Y-88  1   -61.9    14.1    62.1
                                                48.6%               3140 OURINHO-2-88  1    42.6     9.8    42.7                37
 2044    1  0   1.032     0.0     0.0     0.0     0.0     0.0     0.0
 TATUI-2Y-138   -98.3     0.0     0.0     0.0     0.0     0.0     0.0
                                                14.3%               2023 ALPARGA-Y138  1    11.4    -8.4    13.7
```

```
                                                 36.7%                 2033 CESARIO-Y138  1   -35.9     6.0    35.2
                                                  0.2%                 3930 TATUI_2__138  1    24.5     2.4    23.8              30
CEPEL - CENTRO DE PESQUISAS DE ENERGIA ELETRICA - PROGRAMA DE ANALISE DE REDES - V08MAR05A                              PAG. 138

ANUAL 06/07 * SETEMBRO 2006 PESADA S/SE 19H N/NE 19H * ANAT0 - FSE - C13
RELATORIO COMPLETO DO SISTEMA * AREA  6 * *     C T E E P - DISTRIBUICAO     *

X----------------- D A D O S  -  B A R R A -------------------------X------------ F L U X O S  -  C I R C U I T O S -------------X
 DA BARRA      TENSAO GERACAO INJ EQV  CARGA   ELO CC  SHUNT    MOTOR
 NUM. KV TIPO   MOD/     MW/     MW/     MW/     MW/   Mvar/     MW/
     NOME       ANG     Mvar    Mvar    Mvar    Mvar   EQUIV    Mvar  PARA BARRA                   FLUXOS
                                                FLUXO % SHUNT L         NUM.     NOME     NC     MW    Mvar  MVA/V_d   TAP  DEFAS TIE
X------------X-------X-------X-------X-------X-------X-------X-------X----X------------X--X-------X-------X-------X------X-----X---X

 2045    1  0   1.023     0.0     0.0     0.0     0.0     0.0     0.0
 OURIN-1-Y-88   -73.9     0.0     0.0     0.0     0.0     0.0     0.0
                                          SUP  117.3%                 613 SALTOGRD-088  1   -52.4     6.2    51.6              05
                                               67.6%                2047 OURIN-G-Y-88  1    27.2   -13.6    29.8
                                               53.4%                3148 OURINHO-1-88  1    25.2     7.3    25.6              37
 2047    1  0   1.023     0.0     0.0     0.0     0.0     0.0     0.0
 OURIN-G-Y-88   -74.1     0.0     0.0     0.0     0.0     0.0     0.0
                                          SUP  141.1%                2043 OURIN-2-Y-88  1    61.9   -14.0    62.1
                                               67.6%                2045 OURIN-1-Y-88  1   -27.2    13.6    29.7
                                               77.2%                2049 OURINHOS-3GR  1   -34.7     0.4    34.0              41
 9510   88  0   1.021     0.0     0.0     0.0     0.0     0.0     0.0
 COCAL-Y  -88   -64.8     0.0     0.0     0.0     0.0     0.0     0.0
                                               86.6%                2006 PARPTA-Y--88  1    36.6   -13.2    38.1
                                                9.7%                2007 S.LINA-Y--88  1     4.2     1.1     4.3
                                               42.1%                9513 COC.CANAA-88  1   -40.8    12.2    41.7              72


TOTAIS DA AREA  6


X--------X--------X--------X--------X--------X--------X--------X--------X
  GERACAO  INJ EQV   CARGA   ELO CC    SHUNT   EXPORT   IMPORT   PERDAS
    MW/      MW/      MW/     MW/     Mvar/    MW/      MW/      MW/
   Mvar     Mvar     Mvar    Mvar     EQUIV   Mvar     Mvar     Mvar
X--------X--------X--------X--------X--------X--------X--------X--------X

      0.0      0.0      0.0      0.0    210.5   4444.5   4536.7     92.2
      0.0      0.0      0.0      0.0      0.0   1314.4   1003.8   -100.1
CEPEL - CENTRO DE PESQUISAS DE ENERGIA ELETRICA - PROGRAMA DE ANALISE DE REDES - V08MAR05A                              PAG. 139

ANUAL 06/07 * SETEMBRO 2006 PESADA S/SE 19H N/NE 19H * ANAT0 - FSE - C13
RELATORIO COMPLETO DO SISTEMA * AREA  7 * *             CPFL                 *

X----------------- D A D O S  -  B A R R A -------------------------X------------ F L U X O S  -  C I R C U I T O S -------------X
 DA BARRA      TENSAO GERACAO INJ EQV  CARGA   ELO CC  SHUNT    MOTOR
 NUM. KV TIPO   MOD/     MW/     MW/     MW/     MW/   Mvar/     MW/
     NOME       ANG     Mvar    Mvar    Mvar    Mvar   EQUIV    Mvar  PARA BARRA                   FLUXOS
                                                FLUXO % SHUNT L         NUM.     NOME     NC     MW    Mvar  MVA/V_d   TAP  DEFAS TIE
X------------X-------X-------X-------X-------X-------X-------X-------X----X------------X--X-------X-------X-------X------X-----X---X

 2038    1  0   0.960     0.0     0.0     0.0     0.0     0.0     0.0
 TAP-BIRN-138   -73.8     0.0     0.0     0.0     0.0     0.0     0.0
                                               52.9%                 646 IPORA-YP-138  1    20.5    35.1    42.3              06
                                               68.2%                 653 GUARANIY-138  1   -35.2   -38.9    54.6              06
                                               11.0%                2039 BIRNOVA--138  1    14.7     3.7    15.8
```

```
 2039    1  0   0.959     0.0     0.0    14.7     0.0     0.0     0.0
 BIRNOVA--138   -73.8     0.0     0.0     3.9     0.0     0.0     0.0
                                              11.0%                  2038 TAP-BIRN-138  1   -14.7    -3.9    15.9
 2100  138  0   0.981     5.0     0.0    55.8     0.0     0.0     0.0
 BVIST+IBA138   -94.4     0.0     0.0    16.9     0.0     0.0     0.0
                                              53.0%                   703 SAOCARLOS138  1   -50.8   -16.9    54.6                06
 2101   69  0   1.000     3.0     0.0     4.8     0.0     0.0     0.0
 GAVIAO----69   -92.0     0.0     0.0     1.2     0.0     0.0     0.0
                                              21.8%                  2109 BARIRI----69  1    -1.0     6.5     6.5
                                              33.4%                  2111 B.ESP.SUL-69  1     9.6     2.9    10.0
                                              39.5%                  2120 US.GAVIAO138  1   -17.0    -5.3    17.8
                                               6.5%                  2134 MATAO-----69  1     2.1    -0.4     2.1
                                              22.9%                  2303 USCANDIDA-69  1     4.5    -4.9     6.6
 2102   69  0   0.996     6.0     0.0     0.0     0.0     0.0     0.0
 AMERICANA-69  -102.1     0.0     0.0     0.0     0.0     0.0     0.0
                                              32.6%                  2189 CAMPOVERD-69  1   -13.4    -8.0    15.7
                                              91.4%                  2198 COSMOPOLI-69  1    17.7     4.2    18.3
                                              19.0%                  2253 3M--------69  1     1.7     3.8     4.2
 2103  138  0   0.966     0.0     0.0     0.0     0.0     0.0     0.0
 US.PINHAL138   -99.5     0.0     0.0     0.0     0.0     0.0     0.0
                                               6.0%                  2179 BARREIRO-138  1     3.5    -1.9     4.1
                                               6.0%                  2276 US.ELOY.C138  1    -3.5     1.9     4.1
 2104   69  0   0.986     3.5     0.0    16.2     0.0     0.0     0.0
 SOUZAS----69   -99.6     0.0     0.0     9.4     0.0     0.0     0.0
                                               7.9%                  2211 ITATIBA---69  1     2.2     0.4     2.3
                                              75.4%                  2242 TANQUINHO-69  1   -14.9    -9.8    18.1
 2105   69  0   0.999     7.0     0.0     2.2     0.0     0.0     0.0
 US.DOURAD-69   -93.1     1.0     0.0     0.6     0.0     0.0     0.0
                                              18.2%                  2275 USJOAQUIM-69  1    -6.2    -0.7     6.2
                                              32.4%                  2279 NUPORANGA-69  1    11.0     1.1    11.0
 2106  138  0   1.004     0.0     0.0    11.0     0.0     0.0     0.0
 AMER.BRAS138   -89.9     0.0     0.0     5.0     0.0     0.0     0.0
                                              52.3%                  2107 ARARA+CTR138  1   -53.4    -8.8    53.9
                                              41.2%                  2156 CELPAV---138  1    42.4     3.8    42.4
CEPEL - CENTRO DE PESQUISAS DE ENERGIA ELETRICA - PROGRAMA DE ANALISE DE REDES - V08MAR05A                                PAG. 140

ANUAL 06/07 * SETEMBRO 2006 PESADA S/SE 19H N/NE 19H * ANAT0 - FSE - C13
RELATORIO COMPLETO DO SISTEMA * AREA  7 * *             CPFL                 *

X----------------- D A D O S  -  B A R R A ------------------------X------------ F L U X O S  -  C I R C U I T O S ------------X
 DA BARRA      TENSAO GERACAO INJ EQV  CARGA   ELO CC  SHUNT    MOTOR
 NUM. KV TIPO   MOD/     MW/     MW/     MW/     MW/   Mvar/     MW/
     NOME       ANG     Mvar    Mvar    Mvar    Mvar   EQUIV    Mvar  PARA BARRA                    FLUXOS
                                                FLUXO % SHUNT L         NUM.     NOME     NC     MW    Mvar  MVA/V_d   TAP  DEFAS TIE
X------------X-------X-------X-------X-------X-------X-------X-------X----X------------X--X-------X-------X-------X------X-----X---X

 2107  138  0   1.011     0.0     0.0    51.5     0.0     0.0     0.0
 ARARA+CTR138   -89.2     0.0     0.0    16.7     0.0     0.0     0.0
                                              63.3%                   560 ARARAQUA-138  1   -65.6    -6.6    65.2                05
                                              52.2%                  2106 AMER.BRAS138  1    53.6     9.0    53.8
                                              66.0%                  2132 PAIOL----138  1   -84.8    -9.2    84.4
                                              44.5%                  2237 SAO.PEDRO138  1    45.3    -9.8    45.8
 2108  138  0   0.995     0.0     0.0    18.4     0.0     0.0     0.0
 TARUMA---138   -85.1     0.0     0.0     7.0     0.0     0.0     0.0
                                              42.8%                  2162 LINS+FBER138  1   -54.2     5.7    54.8
                                              29.8%                  2166 MARIL+POM138  1    35.8   -12.7    38.2
 2109   69  0   0.977     0.0     0.0    10.7     0.0     0.0     0.0
 BARIRI----69   -90.9     0.0     0.0     4.7     0.0     0.0     0.0
                                              23.6%                  2101 GAVIAO----69  1     1.1    -6.8     7.1
                                              40.9%                  2148 BAURU-----69  1   -11.8     2.1    12.3
```

```
 2110  138  0   1.012     0.0     0.0    19.5     0.0     0.0     0.0
 BBON+USBA138   -89.8     0.0     0.0     8.3     0.0     0.0     0.0
                                              83.8%                 635 BBONITA--138  1   -19.5    -8.3    20.9              06
 2111   69  0   0.980     0.0     0.0     3.9     0.0     0.0     0.0
 B.ESP.SUL-69   -92.8     0.0     0.0     0.9     0.0     0.0     0.0
                                              33.7%                2101 GAVIAO----69  1    -9.4    -3.0    10.1
                                              20.2%                2119 F.SALLES--69  1     5.5     2.1     6.1
 2112   69  0   1.006     0.0     0.0     2.6     0.0     0.0     0.0
 BOCAINA---69   -93.6     0.0     0.0     1.8     0.0     0.0     0.0
                                              22.4%                2114 CANAVIAL--69  1     1.8    -6.3     6.5
                                              21.5%                2303 USCANDIDA-69  1    -4.4     4.5     6.2
 2113    1  0   0.989     0.0     0.0    11.1     0.0     0.0     0.0
  BROTAS-138    -94.2     0.0     0.0     3.4     0.0     0.0     0.0
                                              55.6%                1939 BROTAS-Y-138  1   -43.5     6.8    44.5              06
                                              42.9%                2000 RCLARO3-Y138  1    32.4   -10.2    34.3              06
 2114   69  0   1.015     0.0     0.0    12.7     0.0     0.0     0.0
 CANAVIAL--69   -94.2     0.0     0.0     4.4     0.0     0.0     0.0
                                              21.5%                2112 BOCAINA---69  1    -1.7     6.1     6.2
                                              51.7%                2126 JAU+LAMBA-69  1   -11.0   -10.5    15.0
 2115  138  0   0.984     0.0     0.0    22.5     0.0     0.0     0.0
 CITROSUCO138   -91.1     0.0     0.0     9.6     0.0     0.0     0.0
                                              19.8%                2117 DOBRADA--138  1    24.6     4.0    25.4
                                              38.9%                2135 PROGRESSO138  1   -47.1   -13.6    49.9
CEPEL - CENTRO DE PESQUISAS DE ENERGIA ELETRICA - PROGRAMA DE ANALISE DE REDES - V08MAR05A                          PAG. 141

ANUAL 06/07 * SETEMBRO 2006 PESADA S/SE 19H N/NE 19H * ANAT0 - FSE - C13
RELATORIO COMPLETO DO SISTEMA * AREA  7 * *             CPFL               *

X----------------- D A D O S  -  B A R R A ------------------------X------------ F L U X O S  -  C I R C U I T O S ------------X
 DA BARRA      TENSAO GERACAO INJ EQV  CARGA   ELO CC  SHUNT    MOTOR
 NUM. KV TIPO   MOD/     MW/     MW/     MW/     MW/   Mvar/     MW/
     NOME       ANG     Mvar    Mvar    Mvar    Mvar   EQUIV    Mvar  PARA BARRA                   FLUXOS
                                                FLUXO % SHUNT L         NUM.     NOME     NC      MW    Mvar  MVA/V_d   TAP  DEFAS TIE
X------------X-------X-------X-------X-------X-------X-------X-------X----X------------X--X-------X-------X-------X------X-----X---X

 2116   69  0   0.966     0.0     0.0     9.3     0.0     0.0     0.0
 C.RICO----69   -94.7     0.0     0.0     2.9     0.0     0.0     0.0
                                              59.3%                2129 LAR+TQT---69  1     -9.3    -2.9    10.1
 2117  138  0   0.980     0.0     0.0    11.5     0.0     0.0     0.0
 DOBRADA--138   -91.5     0.0     0.0     3.2     0.0     0.0     0.0
                                              19.9%                2115 CITROSUCO138  1   -24.6    -4.7    25.5
                                              10.5%                2128 LAR+ES+IT138  1    13.1     1.5    13.4
 2118  138  0   1.000     0.0     0.0     9.0     0.0     0.0     0.0
 F.JAUENSE138   -89.8     0.0     0.0     3.8     0.0     0.0     0.0
                                              12.9%                2125 JAU+ANT.-138  1     -9.0    -3.8     9.8
 2119   69  0   0.968     0.0     0.0     5.5     0.0     0.0     0.0
 F.SALLES--69   -93.3     0.0     0.0     2.3     0.0     0.0     0.0
                                              20.5%                2111 B.ESP.SUL-69  1     -5.5    -2.3     6.2
 2120  138  0   0.992     0.0     0.0     0.3     0.0     0.0     0.0
 US.GAVIAO138   -90.0     0.0     0.0     0.1     0.0     0.0     0.0
                                              40.3%                2101 GAVIAO----69  1     17.0     5.9    18.1 0.980F
                                              21.0%                2128 LAR+ES+IT138  1     21.4    -0.3    21.6
                                              57.2%                2132 PAIOL----138  1    -38.7    -5.7    39.4
 2121  138  0   0.984     0.0     0.0     2.2     0.0     0.0     0.0
 VOLKSWAGE138   -94.2     0.0     0.0     0.9     0.0     0.0     0.0
                                               2.3%                 704 VOLKSWAGY138  1     -2.2    -0.9     2.4              06
 2122    1  0   1.014     0.0     0.0    43.3     0.0     0.0     0.0
 ESMERALD-138   -97.1     0.0     0.0    19.0     0.0     0.0     0.0
                                              43.0%                 568 S.BARB-2-138  1    -66.8   -34.2    74.0              05
                                              16.0%                2220 NOD+AME--138  1     23.5    15.2    27.6
```

```
 2123   69  0   1.018     0.0     0.0     3.6     0.0     0.0     0.0
 IG.TIETE--69   -90.4     0.0     0.0     1.0     0.0     0.0     0.0
                                              16.5%                 636 BBONITA---69  1    -3.6    -0.9     3.6              06
                                               0.6%                2175 T.LENCOIS-69  1     0.0    -0.1     0.1
 2124  138  0   0.975     0.0     0.0    12.6     0.0     0.0     0.0
 JABOTICAB138   -92.1     0.0     0.0     4.1     0.0     0.0     0.0
                                              26.8%                2128 LAR+ES+IT138  1   -26.8    -3.2    27.6
                                              14.1%                2306 CAI+M+BE-138  1    14.2    -0.9    14.5
 2125  138  0   1.001     0.0     0.0    28.2     0.0     0.0     0.0
 JAU+ANT.-138   -89.8     0.0     0.0    14.0     0.0     0.0     0.0
                                              88.1%                 650 JAU-YP---138  1   -75.8   -48.3    89.8              06
                                              12.6%                2118 F.JAUENSE138  1     9.0     3.4     9.6
                                              89.9%                2126 JAU+LAMBA-69  1    38.6    30.9    49.4 0.919*
CEPEL - CENTRO DE PESQUISAS DE ENERGIA ELETRICA - PROGRAMA DE ANALISE DE REDES - V08MAR05A                              PAG. 142

ANUAL 06/07 * SETEMBRO 2006 PESADA S/SE 19H N/NE 19H * ANAT0 - FSE - C13
RELATORIO COMPLETO DO SISTEMA * AREA  7 * *             CPFL                 *

X----------------- D A D O S  -  B A R R A ------------------------X------------ F L U X O S  -  C I R C U I T O S ------------X
 DA BARRA      TENSAO GERACAO INJ EQV  CARGA   ELO CC  SHUNT    MOTOR
 NUM. KV TIPO   MOD/     MW/     MW/     MW/    MW/   Mvar/     MW/
     NOME       ANG     Mvar    Mvar    Mvar   Mvar   EQUIV    Mvar  PARA BARRA                   FLUXOS
                                                FLUXO % SHUNT L        NUM.     NOME     NC     MW    Mvar  MVA/V_d   TAP  DEFAS TIE
X------------X-------X-------X-------X-------X-------X-------X-------X----X------------X--X-------X-------X-------X------X-----X---X

 2126   69  0   1.032     0.0     0.0     3.6     0.0     0.0     0.0
 JAU+LAMBA-69   -94.0     0.0     0.0     1.5     0.0     0.0     0.0
                                              51.3%                2114 CANAVIAL--69  1    11.1    10.6    14.9
                                              82.6%                2125 JAU+ANT.-138  1   -38.6   -26.5    45.4
                                              75.2%                2168 PEDERNEIR-69  1    23.9    14.5    27.1
 2127  138  0   0.982     0.0     0.0    12.6     0.0     0.0     0.0
 PRADOS---138   -98.3     0.0     0.0     3.6     0.0     0.0     0.0
                                              36.6%                2179 BARREIRO-138  1    43.5    14.9    46.8
                                              47.0%                2344 ITAPIRA--138  1   -56.1   -18.5    60.2
 2128  138  0   0.977     0.0     0.0    28.2     0.0     0.0     0.0
 LAR+ES+IT138   -91.9     0.0     0.0    13.3     0.0     0.0     0.0
                                              46.5%                 560 ARARAQUA-138  1   -56.5   -14.0    59.6              05
                                              10.7%                2117 DOBRADA--138  1   -13.0    -2.9    13.7
                                              21.1%                2120 US.GAVIAO138  1   -21.1    -2.6    21.8
                                              26.8%                2124 JABOTICAB138  1    26.8     3.0    27.6
                                              26.6%                2129 LAR+TQT---69  1    15.3     5.8    16.8 0.980F
                                               6.9%                2137 Us.S. Adelia  1    -3.8    -5.8     7.1
                                              24.1%                2140 TAIUVA---138  1    24.0     3.2    24.8
 2129   69  0   0.985     0.0     0.0     5.9     0.0     0.0     0.0
 LAR+TQT---69   -93.7     0.0     0.0     2.4     0.0     0.0     0.0
                                              58.8%                2116 C.RICO----69  1     9.4     2.8    10.0
                                              26.1%                2128 LAR+ES+IT138  1   -15.3    -5.2    16.5
 2130  138  0   0.960     0.0     0.0     8.9     0.0     0.0     0.0
 PIRANGI--138   -93.6     0.0     0.0     3.9     0.0     0.0     0.0
                                              38.1%                2131 PIRANGI---69  1    16.5     7.9    19.0 0.935*
                                              14.2%                2306 CAI+M+BE-138  1   -12.7    -5.9    14.6
                                              14.2%                2306 CAI+M+BE-138  2   -12.7    -5.9    14.6
 2131   69  0   1.011     0.0     0.0     0.0     0.0     0.0     0.0
 PIRANGI---69   -95.6     0.0     0.0     0.0     0.0     0.0     0.0
                                              35.6%                2130 PIRANGI--138  1   -16.5    -7.3    17.8
                                              33.2%                2138 STAADELIA-69  1     9.7     6.1    11.3
                                              31.0%                2308 CAJOBI----69  1     6.8     1.2     6.8
 2132  138  0   1.019     0.0     0.0    16.2     0.0     0.0     0.0
 PAIOL----138   -88.0     0.0     0.0     4.9     0.0     0.0     0.0
                                              63.6%                 560 ARARAQUA-138  1   -82.0   -12.5    81.4              05
```

```
                                                  76.3%                 560 ARARAQUA-138  2  -141.8   -35.5   143.4              05
                                                  65.9%                2107 ARARA+CTR138  1    85.4    10.3    84.4
                                                  56.8%                2120 US.GAVIA0138  1    39.6     5.2    39.2
                                                  66.8%                2135 PROGRESSO138  1    82.7    27.7    85.6
CEPEL - CENTRO DE PESQUISAS DE ENERGIA ELETRICA - PROGRAMA DE ANALISE DE REDES - V08MAR05A                                PAG. 143

ANUAL 06/07 * SETEMBRO 2006 PESADA S/SE 19H N/NE 19H * ANAT0 - FSE - C13
RELATORIO COMPLETO DO SISTEMA * AREA  7 * *              CPFL                *

X----------------- D A D O S  -  B A R R A ------------------------X------------ F L U X O S  -  C I R C U I T O S ------------X
 DA BARRA      TENSAO GERACAO INJ EQV  CARGA   ELO CC  SHUNT    MOTOR
 NUM. KV TIPO   MOD/     MW/     MW/     MW/     MW/   Mvar/     MW/
     NOME       ANG     Mvar    Mvar    Mvar    Mvar   EQUIV    Mvar  PARA BARRA                    FLUXOS
                                                FLUXO % SHUNT L         NUM.     NOME     NC     MW    Mvar  MVA/V_d   TAP  DEFAS TIE
X------------X-------X-------X-------X-------X-------X-------X-------X----X------------X--X-------X-------X-------X------X-----X---X

 2133  138  0   0.979     0.0     0.0    27.3     0.0     0.0     0.0
 PARAISO--138   -94.6     0.0     0.0     9.3     0.0     0.0     0.0
                                                 28.6%                 703 SAOCARLOS138  1   -27.3    -9.3    29.4              06
 2134   69  0   0.996     0.0     0.0     2.1     0.0     0.0     0.0
 MATAO-----69   -92.4     0.0     0.0     0.4     0.0     0.0     0.0
                                                  6.4%                2101 GAVIAO----69  1    -2.1    -0.1     2.1
                                                  1.0%                2144 US.CORONA-69  1     0.0    -0.3     0.3
 2135  138  0   0.987     0.0     0.0    34.1     0.0     0.0     0.0
 PROGRESSO138   -90.8     0.0     0.0    11.1     0.0     0.0     0.0
                                                 38.9%                2115 CITROSUCO138  1    47.2    13.6    49.8
                                                 67.3%                2132 PAIOL----138  1   -81.3   -24.7    86.1
 2136  138  0   1.007     0.0     0.0     8.7     0.0     0.0     0.0
 RINCAO---138   -89.9     0.0     0.0     3.5     0.0     0.0     0.0
                                                 49.9%                2142 UIRAPURU-138  1   -51.5    -4.7    51.4
                                                 41.3%                2268 IGUAPE---138  1    42.8     1.2    42.6
 2137  138  0   0.982    20.0     0.0     5.0     0.0     0.0     0.0
 Us.S. Adelia   -91.8     0.0     0.0     2.1     0.0     0.0     0.0
                                                  5.5%                2128 LAR+ES+IT138  1     3.8     4.1     5.7
                                                 12.7%                2256 BARRINHA-138  1    11.2    -6.2    13.1
 2138   69  0   1.008    10.0     0.0    15.0     0.0     0.0     0.0
 STAADELIA-69   -95.6     0.0     0.0     4.8     0.0     0.0     0.0
                                                 33.3%                2131 PIRANGI---69  1    -9.6    -6.1    11.3
                                                 14.1%                2158 MONTEALTO-69  1     4.6     1.3     4.8
 2139  138  0   0.980     0.0     0.0    33.1     0.0     0.0     0.0
 COLONIAL-138   -98.0     0.0     0.0    18.8     0.0     0.0     0.0
                                                 35.7%                2200 CRUZEIRO 138  1   -35.5    -6.3    36.8
                                                 12.6%                2233 SAC+EATON138  1     2.4   -12.5    13.0
 2140  138  0   0.969     0.0     0.0    16.8     0.0     0.0     0.0
 TAIUVA---138   -92.8     0.0     0.0     7.4     0.0     0.0     0.0
                                                 24.3%                2128 LAR+ES+IT138  1   -23.9    -4.2    25.0
                                                  7.8%                2306 CAI+M+BE-138  1     7.1    -3.2     8.0
 2141    1  0   0.946     0.0     0.0     0.0     0.0     0.0     0.0
 TRIAN-YP-138   -74.0     0.0     0.0     0.0     0.0     0.0     0.0
                                                 89.2%                 630 ARACAT-YP138  1   -72.4   -36.4    85.7              06
                                                 27.6%                2281 TRIANON--138  1    20.6    14.4    26.5
                                                 62.0%                2296 ARACATUBA138  1    51.9    22.0    59.5
CEPEL - CENTRO DE PESQUISAS DE ENERGIA ELETRICA - PROGRAMA DE ANALISE DE REDES - V08MAR05A                                PAG. 144

ANUAL 06/07 * SETEMBRO 2006 PESADA S/SE 19H N/NE 19H * ANAT0 - FSE - C13
RELATORIO COMPLETO DO SISTEMA * AREA  7 * *              CPFL                *

X----------------- D A D O S  -  B A R R A ------------------------X------------ F L U X O S  -  C I R C U I T O S ------------X
 DA BARRA      TENSAO GERACAO INJ EQV  CARGA   ELO CC  SHUNT    MOTOR
 NUM. KV TIPO   MOD/     MW/     MW/     MW/     MW/   Mvar/     MW/
```

```
     NOME       ANG     Mvar    Mvar    Mvar    Mvar   EQUIV    Mvar  PARA BARRA                    FLUXOS
                                               FLUXO % SHUNT L         NUM.     NOME     NC     MW    Mvar  MVA/V_d   TAP  DEFAS TIE
X------------X-------X-------X-------X-------X-------X-------X-------X----X------------X--X-------X-------X-------X------X-----X---X

 2142  138  0   1.018     0.0     0.0    21.9     0.0     0.0     0.0
 UIRAPURU-138   -88.3     0.0     0.0     5.8     0.0     0.0     0.0
                                              71.2%                  560 ARARAQUA-138  1   -73.9   -10.6    73.3              05
                                              49.8%                 2136 RINCAO---138  1    52.0     4.8    51.3
 2143  138  0   1.013     0.0     0.0    14.6     0.0     0.0     0.0
 TROPICAL-138   -79.8     0.0     0.0     5.6     0.0     0.0     0.0
                                              60.4%                  661 PROMISSAO138  1   -77.8    -8.9    77.3              06
                                              48.8%                 2162 LINS+FBER138  1    63.2     3.3    62.5
 2144   69  0   0.996     0.0     0.0     0.0     0.0     0.0     0.0
 US.CORONA-69   -92.4     0.0     0.0     0.0     0.0     0.0     0.0
                                               0.0%                 2134 MATAO-----69  1     0.0     0.0     0.0
 2145    1  0   1.014     0.0     0.0    25.9     0.0     0.0     0.0
 CILLOS---138   -97.1     0.0     0.0     9.7     0.0     0.0     0.0
                                              23.0%                  568 S.BARB-2-138  1   -38.8   -20.4    43.3              05
                                               8.8%                 2181 FAZVELHA-138  1    12.9    10.7    16.6
 2146  138  0   0.981     0.0     0.0    48.1     0.0     0.0     0.0
 AG+DU/AG-138   -85.5     0.0     0.0    18.5     0.0     0.0     0.0
                                              73.1%                 2174 TR.BRANCA138  1   -69.3   -25.4    75.3
                                              22.1%                 2298 GAIVOTA--138  1    21.2     6.9    22.8
 2147  138  0   1.027     0.0     0.0    16.0     0.0     0.0     0.0
 BAURU----138   -82.5     0.0     0.0     5.1     0.0     0.0     0.0
                                              73.5%                  562 BAURU----138  1  -102.9   -32.6   105.1              05
                                              87.4%                 2148 BAURU-----69  1    38.5    12.3    39.3 1.000F
                                              48.0%                 2159 HIPODROMO138  1    48.4    15.2    49.4
 2148   69  0   1.006     0.0     0.0    20.5     0.0     0.0     0.0
 BAURU-----69   -86.8     0.0     0.0     7.5     0.0     0.0     0.0
                                              41.3%                 2109 BARIRI----69  1    12.3    -2.1    12.4
                                              87.4%                 2147 BAURU----138  1   -38.5    -9.2    39.3
                                              23.4%                 2167 P.ALVES---69  1     5.7     3.8     6.8
 2149  138  0   1.002     0.0     0.0    41.5     0.0     0.0     0.0
 ESTORIL--138   -84.1     0.0     0.0    18.4     0.0     0.0     0.0
                                              14.8%                 2159 HIPODROMO138  1   -13.1    -7.8    15.3
                                              29.3%                 2174 TR.BRANCA138  1   -28.4   -10.6    30.2
 2150  138  0   1.008     0.0     0.0    23.2     0.0     0.0     0.0
 BOTUCATU-138   -90.8     0.0     0.0     8.4     0.0     0.0     0.0
                                              29.8%                  626 BOTUCATU-138  1   -44.3    -9.6    45.0              05
                                              31.0%                  626 BOTUCATU-138  2   -43.2   -11.4    44.3              05
                                              23.3%                 2154 DTX+RJ+EU138  1    15.1    18.8    24.0
                                              51.2%                 2218 NAZ+STE--138  1    49.1    -6.2    49.1
CEPEL - CENTRO DE PESQUISAS DE ENERGIA ELETRICA - PROGRAMA DE ANALISE DE REDES - V08MAR05A                                PAG. 145

ANUAL 06/07 * SETEMBRO 2006 PESADA S/SE 19H N/NE 19H * ANAT0 - FSE - C13
RELATORIO COMPLETO DO SISTEMA * AREA  7 * *              CPFL                 *

X----------------- D A D O S  -  B A R R A -------------------------X------------ F L U X O S  -  C I R C U I T O S ------------X
 DA BARRA      TENSAO GERACAO INJ EQV  CARGA   ELO CC  SHUNT    MOTOR
 NUM. KV TIPO   MOD/     MW/     MW/     MW/     MW/   Mvar/     MW/
     NOME       ANG     Mvar    Mvar    Mvar    Mvar   EQUIV    Mvar  PARA BARRA                    FLUXOS
                                               FLUXO % SHUNT L         NUM.     NOME     NC     MW    Mvar  MVA/V_d   TAP  DEFAS TIE
X------------X-------X-------X-------X-------X-------X-------X-------X----X------------X--X-------X-------X-------X------X-----X---X

 2151   69  0   0.972     0.0     0.0     9.7     0.0     0.0     0.0
 CAF+REG---69   -86.7     0.0     0.0     4.3     0.0     0.0     0.0
                                              22.9%                 2157 GUARANTA--69  1     6.5     0.4     6.7
                                              59.7%                 2163 LINS------69  1   -16.2    -4.7    17.3
 2153  138  0   1.001     0.0     0.0     7.6     0.0     0.0     0.0
```

```
 DUARTINA-138   -84.9     0.0     0.0     2.6     0.0     0.0     0.0
                                                25.2%                 2174 TR.BRANCA138  1   -25.9    -1.8    25.9
                                                17.7%                 2177 VITORIA--138  1    18.3    -0.8    18.3
 2154  138  0   1.005     0.0     0.0    32.0     0.0     0.0     0.0
 DTX+RJ+EU138   -90.8     0.0     0.0    13.6     0.0     0.0     0.0
                                                23.5%                 2150 BOTUCATU-138  1   -15.1   -19.0    24.2
                                                17.1%                 2172 SAOMANUEL138  1   -16.9     5.4    17.7
 2155   69  0   1.010     0.0     0.0     4.0     0.0     0.0     0.0
 GETULINA--69   -84.8     0.0     0.0     1.5     0.0     0.0     0.0
                                                19.2%                 2163 LINS------69  1    -4.0    -1.5     4.2
 2156  138  0   0.989     0.0     0.0    31.5     0.0     0.0     0.0
 CELPAV---138   -92.2     0.0     0.0    13.4     0.0     0.0     0.0
                                                41.4%                 2106 AMER.BRAS138  1   -41.9    -4.5    42.6
                                                13.5%                 2268 IGUAPE---138  1    10.4    -8.9    13.9
 2157   69  0   0.966     0.0     0.0     2.0     0.0     0.0     0.0
 GUARANTA--69   -87.1     0.0     0.0     0.7     0.0     0.0     0.0
                                                23.0%                 2151 CAF+REG---69  1    -6.4    -0.5     6.7
                                                15.8%                 2169 PIRAJUI---69  1     4.4    -0.2     4.6
 2158   69  0   0.995     0.0     0.0     4.6     0.0     0.0     0.0
 MONTEALTO-69   -96.2     0.0     0.0     1.6     0.0     0.0     0.0
                                                14.4%                 2138 STAADELIA-69  1    -4.6    -1.6     4.9
 2159  138  0   1.009     0.0     0.0    34.7     0.0     0.0     0.0
 HIPODROMO138   -83.7     0.0     0.0     8.8     0.0     0.0     0.0
                                                48.4%                 2147 BAURU----138  1   -47.9   -15.3    49.8
                                                14.1%                 2149 ESTORIL--138  1    13.2     6.5    14.6
 2160  138  0   0.994     0.0     0.0    46.8     0.0    29.6     0.0
 ITAMBE---138   -86.4     0.0     0.0    15.8     0.0     0.0     0.0
                                                44.7%                 2166 MARIL+POM138  1   -44.2    12.0    46.1
                                                 3.1%                 2177 VITORIA--138  1    -2.6     1.9     3.2
 2161  138  0   0.963     0.0     0.0    12.0     0.0     0.0     0.0
 LENCOIS--138   -86.6     0.0     0.0     2.9     0.0     0.0     0.0
                                                 0.0%                 2178 ZILLO----138  1     0.0     0.0     0.0
                                                12.4%                 2298 GAIVOTA--138  1   -12.0    -2.9    12.8
CEPEL - CENTRO DE PESQUISAS DE ENERGIA ELETRICA - PROGRAMA DE ANALISE DE REDES - V08MAR05A                          PAG. 146

ANUAL 06/07 * SETEMBRO 2006 PESADA S/SE 19H N/NE 19H * ANAT0 - FSE - C13
RELATORIO COMPLETO DO SISTEMA * AREA  7 * *             CPFL                *

X----------------- D A D O S  -  B A R R A -------------------------X------------ F L U X O S  -  C I R C U I T O S ------------X
 DA BARRA      TENSAO GERACAO INJ EQV  CARGA   ELO CC  SHUNT    MOTOR
 NUM. KV TIPO   MOD/     MW/     MW/     MW/     MW/   Mvar/     MW/
     NOME       ANG     Mvar    Mvar    Mvar    Mvar   EQUIV    Mvar  PARA BARRA                    FLUXOS
                                                FLUXO % SHUNT L         NUM.     NOME     NC     MW    Mvar  MVA/V_d   TAP  DEFAS TIE
X------------X-------X-------X-------X-------X-------X-------X-------X----X------------X--X-------X-------X-------X------X-----X---X

 2162  138  0   1.009     0.0     0.0    20.4     0.0     0.0     0.0
 LINS+FBER138   -80.3     0.0     0.0     7.3     0.0     0.0     0.0
                                                58.9%                  661 PROMISSAO138  1   -75.6    -7.9    75.3               06
                                                43.1%                 2108 TARUMA---138  1    55.5    -5.0    55.2
                                                48.8%                 2143 TROPICAL-138  1   -63.0    -3.2    62.5
                                                64.3%                 2163 LINS------69  1    33.7    15.2    36.7 0.964*
                                                38.3%                 2166 MARIL+POM138  1    49.1    -6.3    49.0
                                                38.1%                 4222 Equipav       1   -20.0    -0.1    19.8
 2163   69  0   1.017     0.0     0.0     0.0     0.0     0.0     0.0
 LINS------69   -84.5     0.0     0.0     0.0     0.0     0.0     0.0
                                                59.3%                 2151 CAF+REG---69  1    16.7     5.1    17.2
                                                18.9%                 2155 GETULINA--69  1     4.0     1.3     4.2
                                                62.0%                 2162 LINS+FBER138  1   -33.7   -12.3    35.3
                                                46.8%                 2171 PROMISSAO-69  1    13.0     5.9    14.0
 2164  138  0   1.007     0.0     0.0     4.0     0.0     0.0     0.0
```

```
 BEMAFI---138   -97.2     0.0     0.0     1.7     0.0     0.0     0.0
                                               50.7%                 2197 COBRASMA-138  1   -68.5   -25.0    72.5
                                               47.7%                 2226 PIRELLI--138  1    64.5    23.3    68.2
 2165   69  0   0.973    10.0     0.0     9.9     0.0     0.0     0.0
 MACATUBA--69   -96.2     0.0     0.0     2.0     0.0     0.0     0.0
                                                5.7%                 2168 PEDERNEIR-69  1     0.1    -2.0     2.1
 2166  138  0   0.995     0.0     0.0    39.1     0.0    19.8     0.0
 MARIL+POM138   -85.5     0.0     0.0    13.7     0.0     0.0     0.0
                                               29.7%                 2108 TARUMA---138  1   -35.7    12.4    38.0
                                               44.9%                 2160 ITAMBE---138  1    44.4   -12.0    46.3
                                               37.8%                 2162 LINS+FBER138  1   -47.8     5.7    48.4
 2167   69  0   0.967     0.0     0.0     3.6     0.0     0.0     0.0
 P.ALVES---69   -87.6     0.0     0.0     1.6     0.0     0.0     0.0
                                               24.7%                 2148 BAURU-----69  1    -5.5    -4.2     7.2
                                               11.5%                 2169 PIRAJUI---69  1     1.9     2.6     3.3
 2168   69  0   0.977     0.0     0.0    23.3     0.0     0.0     0.0
 PEDERNEIR-69   -96.4     0.0     0.0    11.3     0.0     0.0     0.0
                                               75.8%                 2126 JAU+LAMBA-69  1   -23.2   -13.1    27.3
                                                5.0%                 2165 MACATUBA--69  1    -0.1     1.8     1.8
 2169   69  0   0.961     0.0     0.0     6.3     0.0     0.0     0.0
 PIRAJUI---69   -87.6     0.0     0.0     2.7     0.0     0.0     0.0
                                               15.8%                 2157 GUARANTA--69  1    -4.4     0.1     4.6
                                               12.0%                 2167 P.ALVES---69  1    -1.9    -2.8     3.5
CEPEL - CENTRO DE PESQUISAS DE ENERGIA ELETRICA - PROGRAMA DE ANALISE DE REDES - V08MAR05A                          PAG. 147

ANUAL 06/07 * SETEMBRO 2006 PESADA S/SE 19H N/NE 19H * ANAT0 - FSE - C13
RELATORIO COMPLETO DO SISTEMA * AREA  7 * *             CPFL              *

X----------------- D A D O S  -  B A R R A ------------------------X------------ F L U X O S  -  C I R C U I T O S ------------X
 DA BARRA      TENSAO GERACAO INJ EQV  CARGA   ELO CC  SHUNT    MOTOR
 NUM. KV TIPO   MOD/     MW/     MW/     MW/     MW/   Mvar/     MW/
     NOME       ANG     Mvar    Mvar    Mvar    Mvar   EQUIV    Mvar  PARA BARRA                    FLUXOS
                                                FLUXO % SHUNT L         NUM.     NOME     NC      MW    Mvar  MVA/V_d   TAP  DEFAS TIE
X------------X-------X-------X-------X-------X-------X-------X-------X----X------------X--X-------X-------X-------X------X-----X---X

 2170  138  0   1.010     0.0     0.0     7.5     0.0     0.0     0.0
 AIR_LIQ--138   -95.7     0.0     0.0     3.2     0.0     0.0     0.0
                                               42.5%                 2230 DUP+DEG--138  1    43.3    -8.7    43.7
                                               49.1%                 2241 TANQUINHO138  1   -50.8     5.5    50.6
 2171   69  0   0.985     0.0     0.0    12.7     0.0     0.0     0.0
 PROMISSAO-69   -85.5     0.0     0.0     5.8     0.0     0.0     0.0
                                               47.2%                 2163 LINS------69  1   -12.7    -5.8    14.2
 2172  138  0   1.005     0.0     0.0    19.1     0.0     0.0     0.0
 SAOMANUEL138   -90.4     0.0     0.0     5.9     0.0     0.0     0.0
                                               17.5%                 2154 DTX+RJ+EU138  1    16.9    -6.3    18.0
                                               34.8%                 4221 Tie B.Grande  1   -36.0     0.4    35.9
 2173  138  0   1.004     0.0     0.0     4.4     0.0     0.0     0.0
 ST.MARINA138   -97.5     0.0     0.0     1.9     0.0     0.0     0.0
                                               34.2%                 2190 CAPIVARI-138  1    41.3    14.9    43.7
                                               37.9%                 2215 MONTEMOR-138  1   -45.7   -16.8    48.5
 2174  138  0   1.012     0.0     0.0    20.0     0.0     0.0     0.0
 TR.BRANCA138   -83.5     0.0     0.0     9.6     0.0     0.0     0.0
                                               52.7%                  562 BAURU----138  1   -72.6   -23.4    75.4               05
                                               52.7%                  562 BAURU----138  2   -72.6   -23.4    75.4               05
                                               72.6%                 2146 AG+DU/AG-138  1    70.6    27.3    74.8
                                               29.0%                 2149 ESTORIL--138  1    28.5     9.8    29.8
                                               25.1%                 2153 DUARTINA-138  1    26.1     0.2    25.8
 2175   69  0   1.018     0.0     0.0     0.0     0.0     0.0     0.0
 T.LENCOIS-69   -90.4     0.0     0.0     0.0     0.0     0.0     0.0
                                                0.0%                 2123 IG.TIETE--69  1     0.0     0.0     0.0
```

```
 2177  138  0   0.992     0.0     0.0    15.5     0.0     0.0     0.0
 VITORIA--138   -86.2     0.0     0.0     6.0     0.0     0.0     0.0
                                              17.8%                  2153 DUARTINA-138  1   -18.1    -1.8    18.3
                                               4.9%                  2160 ITAMBE---138  1     2.6    -4.2     5.0
 2178  138  0   1.011     0.0     0.0     3.7     0.0     0.0     0.0
 ZILLO----138   -89.1     0.0     0.0     1.6     0.0     0.0     0.0
                                               0.0%                  2161 LENCOIS--138  1     0.0     0.0     0.0
                                               3.9%                  4221 Tie B.Grande  1    -3.7    -1.6     4.0
 2179  138  0   0.965     0.0     0.0     0.0     0.0     0.0     0.0
 BARREIRO-138   -99.7     0.0     0.0     0.0     0.0     0.0     0.0
                                               5.2%                  2103 US.PINHAL138  1    -3.5     0.1     3.6
                                              37.0%                  2127 PRADOS---138  1   -43.1   -15.1    47.3
                                              28.5%                  2213 LINDOIA--138  1    33.3    11.6    36.5
                                              13.8%                  2239 SOCORRO--138  1    13.3     3.4    14.3
CEPEL - CENTRO DE PESQUISAS DE ENERGIA ELETRICA - PROGRAMA DE ANALISE DE REDES - V08MAR05A                          PAG. 148

ANUAL 06/07 * SETEMBRO 2006 PESADA S/SE 19H N/NE 19H * ANAT0 - FSE - C13
RELATORIO COMPLETO DO SISTEMA * AREA  7 * *              CPFL                *

X----------------- D A D O S  -  B A R R A -------------------------X------------ F L U X O S  -  C I R C U I T O S ------------X
 DA BARRA      TENSAO GERACAO INJ EQV  CARGA   ELO CC  SHUNT    MOTOR
 NUM. KV TIPO   MOD/     MW/     MW/     MW/     MW/   Mvar/     MW/
     NOME       ANG     Mvar    Mvar    Mvar    Mvar   EQUIV    Mvar  PARA BARRA                    FLUXOS
                                              FLUXO % SHUNT L         NUM.     NOME     NC     MW    Mvar  MVA/V_d   TAP  DEFAS TIE
X------------X-------X-------X-------X-------X-------X-------X-------X----X------------X--X-------X-------X-------X------X-----X---X

 2180    1  0   1.011     0.0     0.0     4.2     0.0     0.0     0.0
 FORTILIT-138   -97.0     0.0     0.0     1.8     0.0     0.0     0.0
                                              11.6%                  2219 NOV.APARE138  1   -20.1    -1.2    19.9
                                               9.1%                  2220 NOD+AME--138  1    15.9    -0.6    15.7
 2181    1  0   1.013     0.0     0.0    22.6     0.0     0.0     0.0
 FAZVELHA-138   -97.1     0.0     0.0     7.6     0.0     0.0     0.0
                                               8.9%                  2145 CILLOS---138  1   -12.9   -11.0    16.8
                                               5.4%                  2219 NOV.APARE138  1    -9.7     3.4    10.1
 2182  138  0   0.957     0.0     0.0     7.0     0.0     0.0     0.0
 Q.AMPARO-138  -102.4     0.0     0.0     3.0     0.0     0.0     0.0
                                              31.8%                   679 Q.AMPAROY138  1    -7.0    -3.0     8.0                06
 2183  138  0   0.995     0.0     0.0    21.3     0.0     0.0     0.0
 BANDEIRAN138   -98.0     0.0     0.0     6.6     0.0     0.0     0.0
                                               0.7%                  2251 VIRACOPOS138  1     0.7     0.7     1.0
                                              16.3%                  3419 INDANOVA-138  1   -22.0    -7.3    23.3                42
 2184  138  0   1.009     0.0     0.0    35.2     0.0     0.0     0.0
 BGE+MDEST138   -95.2     0.0     0.0    13.1     0.0     0.0     0.0
                                              36.1%                  2241 TANQUINHO138  1   -35.2   -13.1    37.2
 2185  138  0   1.015     0.0     0.0    12.8     0.0     0.0     0.0
 BARBARENS138   -96.9     0.0     0.0     5.3     0.0     0.0     0.0
                                              67.8%                   568 S.BARB-2-138  1   -64.2   -30.0    69.8                05
                                              54.5%                  2224 PIRACICAB138  1    51.4    24.7    56.2
 2186   69  0   1.011     0.0     0.0     8.7     0.0     0.0     0.0
 BEIRA RIO-69  -100.4     0.0     0.0     2.0     0.0     0.0     0.0
                                              34.0%                  2225 PIRACICAB-69  1    -8.7    -2.0     8.8
 2187  138  0   1.001     0.0     0.0    30.3     0.0     0.0     0.0
 BVIST+BCH138   -97.7     0.0     0.0     9.2     0.0     0.0     0.0
                                              60.6%                  2205 GEVISA---138  1   -58.8   -20.9    62.4
                                              29.9%                  2247 TREVO----138  1    28.5    11.7    30.8
 2188  138  0   1.000     0.0     0.0    73.0     0.0     0.0     0.0
 CAMPINAS-138   -97.3     0.0     0.0     1.1     0.0     0.0     0.0
                                              19.4%                  2222 PAINEIRAS138  1   -36.5    -0.5    36.5
                                              19.4%                  2222 PAINEIRAS138  2   -36.5    -0.5    36.5
 2189   69  0   1.004     0.0     0.0    16.7     0.0     0.0     0.0
```

```
 CAMPOVERD-69  -101.8     0.0     0.0     7.1     0.0     0.0     0.0
                                                32.5%                 2102 AMERICANA-69  1    13.5     8.0    15.6
                                                70.0%                 2192 CARIOBA---69  1   -30.2   -15.1    33.6
CEPEL - CENTRO DE PESQUISAS DE ENERGIA ELETRICA - PROGRAMA DE ANALISE DE REDES - V08MAR05A                                PAG. 149

ANUAL 06/07 * SETEMBRO 2006 PESADA S/SE 19H N/NE 19H * ANAT0 - FSE - C13
RELATORIO COMPLETO DO SISTEMA * AREA  7 * *              CPFL                *

X----------------- D A D O S  -  B A R R A -------------------------X------------ F L U X O S  -  C I R C U I T O S ------------X
 DA BARRA      TENSAO GERACAO INJ EQV  CARGA   ELO CC  SHUNT    MOTOR
 NUM. KV TIPO   MOD/     MW/     MW/     MW/     MW/   Mvar/     MW/
     NOME       ANG     Mvar    Mvar    Mvar    Mvar   EQUIV    Mvar  PARA BARRA                    FLUXOS
                                                FLUXO % SHUNT L        NUM.     NOME     NC     MW    Mvar  MVA/V_d   TAP  DEFAS TIE
X------------X-------X-------X-------X-------X-------X-------X-------X----X------------X--X-------X-------X-------X------X-----X---X

 2190  138  0   0.999     0.0     0.0    23.0     0.0     0.0     0.0
 CAPIVARI-138   -97.8     0.0     0.0    10.5     0.0     0.0     0.0
                                                34.3%                 2173 ST.MARINA138  1   -41.2   -15.1    43.9
                                                14.7%                 2232 RIOPEDRAS138  1    18.2     4.6    18.8
 2191  138  0   1.013     0.0     0.0     0.0     0.0    30.8     0.0
 CARIOBA--138   -97.0     0.0     0.0     0.0     0.0     0.0     0.0
                                                36.6%                  568 S.BARB-2-138  1   -36.3   -26.3    44.2              05
                                                36.6%                  568 S.BARB-2-138  2   -36.3   -26.3    44.2              05
                                                22.1%                  568 S.BARB-2-138  3   -38.2   -17.5    41.5              05
                                                78.4%                 2192 CARIOBA---69  1    35.9    23.5    42.3 0.955*
                                                32.5%                 2203 FIBR+FID-138  1    31.2    13.3    33.5
                                                27.0%                 2207 GOODYEAR-138  1     8.8    26.7    27.8
                                                34.2%                 2208 IPE------138  1    34.0    10.7    35.2
                                                14.3%                 2212 JARDIM---138  1   -15.3    -8.6    17.3
                                                10.0%                 2245 TOYOBO---138  1     8.6     5.9    10.3
                                                29.0%                 2252 FCP+YWH--138  1     7.8    29.2    29.9
 2192   69  0   1.015     0.0     0.0     0.0     0.0     0.0     0.0
 CARIOBA---69  -101.2     0.0     0.0     0.0     0.0     0.0     0.0
                                                70.0%                 2189 CAMPOVERD-69  1    30.4    15.5    33.6
                                                74.9%                 2191 CARIOBA--138  1   -35.9   -19.9    40.4
                                                23.2%                 2235 S.BARBARA-69  1     5.5     4.4     7.0
 2193  138  0   0.985     0.0     0.0    11.0     0.0     0.0     0.0
 CATERPILA138   -98.9     0.0     0.0     4.7     0.0     0.0     0.0
                                                23.1%                 2209 VOTORANT-138  1   -23.1    -3.7    23.8
                                                12.0%                 2249 UNILESTE-138  1    12.1    -1.0    12.3
 2194  138  0   1.002     0.0     0.0    15.6     0.0     0.0     0.0
 CHAPADAO-138   -97.6     0.0     0.0     3.1     0.0     0.0     0.0
                                                44.3%                 2196 C.JARDIM-138  1    42.4    17.1    45.6
                                                59.5%                 2229 QUILOMBO-138  1   -58.0   -20.2    61.3
 2195    1  0   0.988     0.0     0.0     3.6     0.0     0.0     0.0
 CHARQUEA-138   -97.5     0.0     0.0     0.8     0.0     0.0     0.0
                                                28.8%                 2199 COSTPINTO138  1    27.0   -11.4    29.7
                                                31.8%                 2237 SAO.PEDRO138  1   -30.6    10.6    32.8
 2196  138  0   0.998     0.0     0.0    29.8     0.0     0.0     0.0
 C.JARDIM-138   -97.9     0.0     0.0     7.0     0.0     0.0     0.0
                                                44.4%                 2194 CHAPADAO-138  1   -42.3   -17.2    45.7
                                                15.7%                 2247 TREVO----138  1    12.5    10.2    16.1
 2197  138  0   1.009     0.0     0.0     0.3     0.0     0.0     0.0
 COBRASMA-138   -97.1     0.0     0.0     0.1     0.0     0.0     0.0
                                                50.7%                 2164 BEMAFI---138  1    68.6    25.1    72.4
                                                50.9%                 2219 NOV.APARE138  1   -68.9   -25.2    72.8
CEPEL - CENTRO DE PESQUISAS DE ENERGIA ELETRICA - PROGRAMA DE ANALISE DE REDES - V08MAR05A                                PAG. 150

ANUAL 06/07 * SETEMBRO 2006 PESADA S/SE 19H N/NE 19H * ANAT0 - FSE - C13
RELATORIO COMPLETO DO SISTEMA * AREA  7 * *              CPFL                *
```

```
X----------------- D A D O S  -  B A R R A ------------------------X------------ F L U X O S  -  C I R C U I T O S ------------X
 DA BARRA      TENSAO GERACAO INJ EQV  CARGA   ELO CC  SHUNT    MOTOR
 NUM. KV TIPO   MOD/     MW/     MW/     MW/     MW/   Mvar/     MW/
     NOME       ANG     Mvar    Mvar    Mvar    Mvar   EQUIV    Mvar  PARA BARRA                    FLUXOS
                                                FLUXO % SHUNT L         NUM.     NOME     NC     MW    Mvar  MVA/V_d   TAP  DEFAS TIE
X------------X-------X-------X-------X-------X-------X-------X-------X----X------------X--X-------X-------X-------X------X-----X---X

 2198   69  0   0.966     0.0     0.0    17.3     0.0     0.0     0.0
 COSMOPOLI-69  -103.7     0.0     0.0     3.8     0.0     0.0     0.0
                                                91.6%                  2102 AMERICANA-69  1   -17.3    -3.8    18.3
 2199  138  0   0.988     0.0     0.0    12.5     0.0     0.0     0.0
 COSTPINTO138   -98.2     0.0     0.0     3.2     0.0     0.0     0.0
                                                28.5%                  2195 CHARQUEA-138  1   -26.9    10.8    29.3
                                                19.7%                  2224 PIRACICAB138  1    14.4   -14.0    20.3
 2200  138  0   0.984     0.0     0.0    16.1     0.0     0.0     0.0
 CRUZEIRO 138   -97.6     0.0     0.0     3.4     0.0     0.0     0.0
                                                35.6%                  2139 COLONIAL-138  1    35.6     6.1    36.7
                                                51.9%                  2221 NOTREDAME138  1   -51.7    -9.5    53.4
 2201  138  0   0.988     0.0     0.0   100.0     0.0     0.0     0.0
 BELGOMIN-138   -98.5     0.0     0.0    42.6     0.0     0.0     0.0
                                                85.9%                  2224 PIRACICAB138  1  -100.0   -42.6   110.0
 2202  138  0   1.011     0.0     0.0    12.0     0.0     0.0     0.0
 ELETROMET138   -97.0     0.0     0.0     5.1     0.0     0.0     0.0
                                                10.7%                  2210 PIRELLI2-138  1   -11.1    -0.6    11.0
                                                 4.4%                  2245 TOYOBO---138  1    -0.9    -4.5     4.5
 2203  138  0   1.012     0.0     0.0    31.2     0.0     0.0     0.0
 FIBR+FID-138   -97.1     0.0     0.0    13.3     0.0     0.0     0.0
                                                32.5%                  2191 CARIOBA--138  1   -31.2   -13.3    33.5
 2204   69  0   1.008     0.0     0.0    13.6     0.0     0.0     0.0
 FIGUEIRA--69  -100.3     0.0     0.0     7.1     0.0     0.0     0.0
                                                24.4%                  2242 TANQUINHO-69  1   -11.7     1.2    11.7
                                                17.6%                  2248 TREVO-----69  1    -1.9    -8.3     8.5
 2205  138  0   1.004     0.0     0.0     2.8     0.0     0.0     0.0
 GEVISA---138   -97.5     0.0     0.0     1.2     0.0     0.0     0.0
                                                60.5%                  2187 BVIST+BCH138  1    58.9    21.0    62.3
                                                63.5%                  2219 NOV.APARE138  1   -61.7   -22.2    65.4
 2206  138  0   1.008     0.0     0.0    16.9     0.0     0.0     0.0
 N.VENEZA-138   -97.2     0.0     0.0     6.3     0.0     0.0     0.0
                                                27.9%                  2219 NOV.APARE138  1   -28.4    -5.5    28.7
                                                11.1%                  2240 SUMARE---138  1    11.5    -0.8    11.4
 2207  138  0   1.009     0.0     0.0    18.0     0.0     0.0     0.0
 GOODYEAR-138   -97.0     0.0     0.0     7.7     0.0     0.0     0.0
                                                27.3%                  2191 CARIOBA--138  1    -8.7   -27.0    28.1
                                                20.6%                  2223 PAU+YPK--138  1    -9.3    19.3    21.2
CEPEL - CENTRO DE PESQUISAS DE ENERGIA ELETRICA - PROGRAMA DE ANALISE DE REDES - V08MAR05A                                PAG. 151

ANUAL 06/07 * SETEMBRO 2006 PESADA S/SE 19H N/NE 19H * ANAT0 - FSE - C13
RELATORIO COMPLETO DO SISTEMA * AREA  7 * *             CPFL                *

X----------------- D A D O S  -  B A R R A ------------------------X------------ F L U X O S  -  C I R C U I T O S ------------X
 DA BARRA      TENSAO GERACAO INJ EQV  CARGA   ELO CC  SHUNT    MOTOR
 NUM. KV TIPO   MOD/     MW/     MW/     MW/     MW/   Mvar/     MW/
     NOME       ANG     Mvar    Mvar    Mvar    Mvar   EQUIV    Mvar  PARA BARRA                    FLUXOS
                                                FLUXO % SHUNT L         NUM.     NOME     NC     MW    Mvar  MVA/V_d   TAP  DEFAS TIE
X------------X-------X-------X-------X-------X-------X-------X-------X----X------------X--X-------X-------X-------X------X-----X---X

 2208  138  0   1.009     0.0     0.0    32.8     0.0     0.0     0.0
 IPE------138   -97.3     0.0     0.0     8.5     0.0     0.0     0.0
                                                34.3%                  2191 CARIOBA--138  1   -33.9   -11.0    35.3
```

```
                                                  2.6%                 2240 SUMARE---138  1     1.1     2.5     2.7
 2209  138  0   0.986     0.0     0.0    14.5     0.0     0.0     0.0
 VOTORANT-138   -98.7     0.0     0.0     6.2     0.0     0.0     0.0
                                                 23.0%                 2193 CATERPILA138  1    23.1     3.5    23.7
                                                 38.3%                 2224 PIRACICAB138  1   -37.6    -9.7    39.4
 2210  138  0   1.011     0.0     0.0     5.5     0.0     0.0     0.0
 PIRELLI2-138   -97.0     0.0     0.0     2.3     0.0     0.0     0.0
                                                 10.7%                 2202 ELETROMET138  1    11.1     0.5    11.0
                                                 16.2%                 2219 NOV.APARE138  1   -16.6    -2.8    16.7
 2211   69  0   0.981     0.0     0.0     2.2     0.0     0.0     0.0
 ITATIBA---69   -99.8     0.0     0.0     0.7     0.0     0.0     0.0
                                                  8.1%                 2104 SOUZAS----69  1    -2.2    -0.7     2.4
 2212  138  0   1.014     0.0     0.0    32.1     0.0     0.0     0.0
 JARDIM---138   -97.0     0.0     0.0    12.5     0.0     0.0     0.0
                                                 42.3%                  568 S.BARB-2-138  1   -47.4   -20.9    51.2                05
                                                 14.3%                 2191 CARIOBA--138  1    15.3     8.4    17.3
 2213  138  0   0.962     0.0     0.0    11.2     0.0     0.0     0.0
 LINDOIA--138  -100.0     0.0     0.0     4.9     0.0     0.0     0.0
                                                 28.6%                 2179 BARREIRO-138  1   -33.2   -11.7    36.6
                                                 23.3%                 2238 SER.NEGRA138  1    22.0     6.8    24.0
 2214  138  0   0.994     0.0     0.0    28.8     0.0     0.0     0.0
 MERDZ+DIC138   -98.1     0.0     0.0    10.7     0.0     0.0     0.0
                                                 10.9%                 2251 VIRACOPOS138  1   -13.2    -8.2    15.7
                                                 11.1%                 2284 JMRAJO+VF138  1   -15.6    -2.5    15.9
 2215  138  0   1.018     0.0     0.0    24.9     0.0     0.0     0.0
 MONTEMOR-138   -96.3     0.0     0.0     9.8     0.0     0.0     0.0
                                                 39.5%                  571 SUMARE---138  1   -70.9   -26.5    74.3                05
                                                 37.5%                 2173 ST.MARINA138  1    46.0    16.7    48.0
 2216  138  0   1.004     0.0     0.0    23.0     0.0     0.0     0.0
 MORROAZUL138   -97.4     0.0     0.0     8.8     0.0     0.0     0.0
                                                 57.9%                 2219 NOV.APARE138  1   -78.6   -27.0    82.8
                                                 40.8%                 3419 INDANOVA-138  1    55.6    18.2    58.3                42
 2217  138  0   1.011     0.0     0.0    19.7     0.0     0.0     0.0
 MORUMBI--138   -96.3     0.0     0.0     5.3     0.0     0.0     0.0
                                                 46.2%                 2219 NOV.APARE138  1    43.1   -21.4    47.6
                                                 62.3%                 2241 TANQUINHO138  1   -62.8    16.1    64.1
CEPEL - CENTRO DE PESQUISAS DE ENERGIA ELETRICA - PROGRAMA DE ANALISE DE REDES - V08MAR05A                                PAG. 152

ANUAL 06/07 * SETEMBRO 2006 PESADA S/SE 19H N/NE 19H * ANAT0 - FSE - C13
RELATORIO COMPLETO DO SISTEMA * AREA  7 * *              CPFL                 *

X------------------ D A D O S  -  B A R R A -------------------------X------------- F L U X O S  -  C I R C U I T O S -------------X
 DA BARRA      TENSAO GERACAO INJ EQV  CARGA   ELO CC  SHUNT    MOTOR
 NUM. KV TIPO   MOD/     MW/     MW/     MW/     MW/   Mvar/     MW/
     NOME       ANG     Mvar    Mvar    Mvar    Mvar   EQUIV    Mvar  PARA BARRA                    FLUXOS
                                                FLUXO % SHUNT L        NUM.     NOME     NC     MW    Mvar  MVA/V_d   TAP  DEFAS TIE
X------------X-------X-------X-------X-------X-------X-------X-------X----X------------X--X-------X-------X-------X------X-----X---X

 2218  138  0   0.977     0.0     0.0    48.9     0.0     0.0     0.0
 NAZ+STE--138   -98.2     0.0     0.0    22.4     0.0     0.0     0.0
                                                 50.4%                 2150 BOTUCATU-138  1   -46.8     6.1    48.4
                                                 30.5%                 2224 PIRACICAB138  1    -2.1   -28.5    29.3
 2219  138  0   1.012     0.0     0.0    22.9     0.0    30.7     0.0
 NOV.APARE138   -96.9     0.0     0.0    12.9     0.0     0.0     0.0
                                                 66.2%                  571 SUMARE---138  1  -115.4   -50.2   124.4                05
                                                 66.2%                  571 SUMARE---138  2  -115.4   -50.2   124.4                05
                                                 11.5%                 2180 FORTILIT-138  1    20.1     0.9    19.9
                                                  5.6%                 2181 FAZVELHA-138  1     9.7    -4.6    10.6
                                                 50.8%                 2197 COBRASMA-138  1    69.0    25.4    72.7
                                                 63.3%                 2205 GEVISA---138  1    62.0    22.4    65.2
```

```
                                                  27.8%                 2206 N.VENEZA-138  1    28.5     5.1    28.6
                                                  16.1%                 2210 PIRELLI2-138  1    16.6     2.5    16.6
                                                  57.8%                 2216 MORROAZUL138  1    79.0    27.5    82.7
                                                  46.0%                 2217 MORUMBI--138  1   -42.9    21.3    47.3
                                                  74.3%                 2229 QUILOMBO-138  1    73.9    23.0    76.5
                                                  56.2%                 2241 TANQUINHO138  1   -55.7    18.0    57.9
                                                  30.1%                 2307 HORTOLAND138  1   -52.3   -23.1    56.5
 2220    1  0   1.010     0.0     0.0    39.3     0.0     0.0     0.0
 NOD+AME--138   -97.3     0.0     0.0    15.8     0.0     0.0     0.0
                                                  16.2%                 2122 ESMERALD-138  1   -23.5   -15.6    27.9
                                                   9.1%                 2180 FORTILIT-138  1   -15.8    -0.2    15.7
 2221  138  0   1.000     0.0     0.0    17.8     0.0     0.0     0.0
 NOTREDAME138   -96.1     0.0     0.0     5.0     0.0     0.0     0.0
                                                  51.6%                 2200 CRUZEIRO 138  1    52.3     9.6    53.2
                                                  69.5%                 2241 TANQUINHO138  1   -70.1   -14.6    71.6
 2222  138  0   1.000     0.0     0.0    26.3     0.0     0.0     0.0
 PAINEIRAS138   -97.1     0.0     0.0     8.6     0.0     0.0     0.0
                                                  19.4%                 2188 CAMPINAS-138  1    36.5     0.4    36.5
                                                  19.4%                 2188 CAMPINAS-138  2    36.5     0.4    36.5
                                                  48.5%                 2241 TANQUINHO138  1   -90.6    -9.7    91.1
                                                  48.5%                 2241 TANQUINHO138  2   -90.6    -9.7    91.1
                                                  43.9%                 2280 ANDORINHA138  1    81.9     9.9    82.5
 2223  138  0   1.002     0.0     0.0    32.8     0.0     0.0     0.0
 PAU+YPK--138   -96.6     0.0     0.0    10.7     0.0     0.0     0.0
                                                  21.6%                 2207 GOODYEAR-138  1     9.4   -20.3    22.3
                                                  41.9%                 2244 REPLAN---138  1   -42.2     9.6    43.1
CEPEL - CENTRO DE PESQUISAS DE ENERGIA ELETRICA - PROGRAMA DE ANALISE DE REDES - V08MAR05A                          PAG. 153

ANUAL 06/07 * SETEMBRO 2006 PESADA S/SE 19H N/NE 19H * ANAT0 - FSE - C13
RELATORIO COMPLETO DO SISTEMA * AREA  7 * *              CPFL                 *

X----------------- D A D O S  -  B A R R A -------------------------X------------ F L U X O S  -  C I R C U I T O S ------------X
 DA BARRA      TENSAO GERACAO INJ EQV  CARGA   ELO CC  SHUNT    MOTOR
 NUM. KV TIPO   MOD/     MW/     MW/     MW/    MW/   Mvar/     MW/
     NOME       ANG     Mvar    Mvar    Mvar   Mvar   EQUIV    Mvar  PARA BARRA                    FLUXOS
                                                FLUXO % SHUNT L         NUM.     NOME     NC     MW    Mvar  MVA/V_d   TAP  DEFAS TIE
X------------X-------X-------X-------X-------X-------X-------X-------X----X------------X--X-------X-------X-------X------X-----X---X

 2224  138  0   0.990     0.0     0.0    18.9     0.0    31.3     0.0
 PIRACICAB138   -98.4     0.0     0.0     4.8     0.0     0.0     0.0
                                                  57.0%                  568 S.BARB-2-138  1   -53.9   -21.7    58.7              05
                                                  57.0%                  568 S.BARB-2-138  2   -53.9   -21.7    58.7              05
                                                  55.3%                 2185 BARBARENS138  1   -50.8   -24.4    56.9
                                                  19.4%                 2199 COSTPINTO138  1   -14.3    13.6    20.0
                                                  85.9%                 2201 BELGOMIN-138  1   100.0    42.8   110.0
                                                  38.2%                 2209 VOTORANT-138  1    37.7     9.6    39.3
                                                  29.4%                 2218 NAZ+STE--138  1     2.2    27.8    28.2
                                                  26.4%                 2225 PIRACICAB-69  1    14.1     0.5    14.3 0.976*
 2225   69  0   1.013     0.0     0.0     0.0     0.0     0.0     0.0
 PIRACICAB-69  -100.2     0.0     0.0     0.0     0.0     0.0     0.0
                                                  33.9%                 2186 BEIRA RIO-69  1     8.7     2.0     8.8
                                                  25.8%                 2224 PIRACICAB138  1   -14.1    -0.1    13.9
                                                  18.9%                 2235 S.BARBARA-69  1     5.4    -1.9     5.7
 2226  138  0   0.996     0.0     0.0    12.8     0.0     0.0     0.0
 PIRELLI--138   -97.9     0.0     0.0     5.5     0.0     0.0     0.0
                                                  47.8%                 2164 BEMAFI---138  1   -64.1   -22.9    68.4
                                                  38.0%                 2284 JMRAJO+VF138  1    51.3    17.4    54.4
 2227  138  0   0.986     0.0     0.0    18.0     0.0     0.0     0.0
 PIRMIRIM-138   -98.8     0.0     0.0     6.9     0.0     0.0     0.0
                                                  37.3%                 2234 SALTINHO-138  1   -33.5   -17.7    38.5
```

```
                                                                 18.6%                  2249 UNILESTE-138  1    15.5    10.8    19.2
 2228  138  0   1.009     0.0     0.0    24.1     0.0     0.0     0.0
 POL+YST--138   -97.0     0.0     0.0    10.2     0.0     0.0     0.0
                                                                 34.3%                  2230 DUP+DEG--138  1   -33.6    12.0    35.3
                                                                 23.2%                  2252 FCP+YWH--138  1     9.5   -22.2    23.9
 2229  138  0   1.008     0.0     0.0    15.6     0.0     0.0     0.0
 QUILOMBO-138   -97.2     0.0     0.0     2.4     0.0     0.0     0.0
                                                                 59.4%                  2194 CHAPADAO-138  1    58.2    20.4    61.1
                                                                 74.4%                  2219 NOV.APARE138  1   -73.8   -22.8    76.6
 2230  138  0   1.009     0.0     0.0     9.4     0.0     0.0     0.0
 DUP+DEG--138   -96.0     0.0     0.0     4.0     0.0     0.0     0.0
                                                                 42.4%                  2170 AIR_LIQ--138  1   -43.2     8.7    43.7
                                                                 34.7%                  2228 POL+YST--138  1    33.8   -12.7    35.8
 2231  138  0   1.005     0.0     0.0    15.0     0.0     0.0     0.0
 RHODIA---138   -96.0     0.0     0.0     6.4     0.0     0.0     0.0
                                                                 72.0%                  2241 TANQUINHO138  1   -74.4    -4.0    74.1
                                                                 57.4%                  2244 REPLAN---138  1    59.4    -2.4    59.1
CEPEL - CENTRO DE PESQUISAS DE ENERGIA ELETRICA - PROGRAMA DE ANALISE DE REDES - V08MAR05A                                   PAG. 154

ANUAL 06/07 * SETEMBRO 2006 PESADA S/SE 19H N/NE 19H * ANAT0 - FSE - C13
RELATORIO COMPLETO DO SISTEMA * AREA  7 * *              CPFL                 *

X----------------- D A D O S  -  B A R R A ------------------------X------------ F L U X O S  -  C I R C U I T O S ------------X
 DA BARRA      TENSAO GERACAO INJ EQV  CARGA   ELO CC  SHUNT    MOTOR
 NUM. KV TIPO   MOD/     MW/     MW/     MW/     MW/   Mvar/     MW/
     NOME       ANG     Mvar    Mvar    Mvar    Mvar   EQUIV    Mvar  PARA BARRA                    FLUXOS
                                                FLUXO % SHUNT L         NUM.     NOME     NC     MW    Mvar  MVA/V_d   TAP  DEFAS TIE
X------------X-------X-------X-------X-------X-------X-------X-------X----X------------X--X-------X-------X-------X------X-----X---X

 2232  138  0   0.994     0.0     0.0     9.8     0.0     0.0     0.0
 RIOPEDRAS138   -98.3     0.0     0.0     3.5     0.0     0.0     0.0
                                                                 15.0%                  2190 CAPIVARI-138  1   -18.1    -5.8    19.1
                                                                  6.8%                  2234 SALTINHO-138  1     8.3     2.3     8.7
 2233  138  0   0.989     0.0     0.0    32.3     0.0     0.0     0.0
 SAC+EATON138   -98.3     0.0     0.0     9.9     0.0     0.0     0.0
                                                                 10.8%                  2139 COLONIAL-138  1    -2.3    10.7    11.1
                                                                 35.7%                  2251 VIRACOPOS138  1   -30.0   -20.6    36.8
 2234  138  0   0.992     0.0     0.0     4.1     0.0     0.0     0.0
 SALTINHO-138   -98.5     0.0     0.0     1.3     0.0     0.0     0.0
                                                                 37.1%                  2227 PIRMIRIM-138  1    33.6    17.5    38.2
                                                                  6.9%                  2232 RIOPEDRAS138  1    -8.3    -2.9     8.9
                                                                 32.7%                  2294 STA.CECIL138  1   -29.4   -15.9    33.7
 2235   69  0   1.007     0.0     0.0    10.8     0.0     0.0     0.0
 S.BARBARA-69  -101.3     0.0     0.0     3.0     0.0     0.0     0.0
                                                                 23.5%                  2192 CARIOBA---69  1    -5.5    -4.5     7.1
                                                                 18.4%                  2225 PIRACICAB-69  1    -5.3     1.5     5.5
 2236  138  0   0.982     0.0     0.0    69.1     0.0     0.0     0.0
 PATRI+MET138   -93.2     0.0     0.0    44.5     0.0     0.0     0.0
                                                                 44.5%                  2268 IGUAPE---138  1   -69.1   -44.5    83.7
 2237  138  0   0.988     0.0     0.0    12.3     0.0     0.0     0.0
 SAO.PEDRO138   -96.6     0.0     0.0     2.5     0.0     0.0     0.0
                                                                 43.2%                  2107 ARARA+CTR138  1   -43.1     8.7    44.5
                                                                 32.2%                  2195 CHARQUEA-138  1    30.8   -11.2    33.1
 2238  138  0   0.956     0.0     0.0    10.2     0.0     0.0     0.0
 SER.NEGRA138  -100.4     0.0     0.0     3.7     0.0     0.0     0.0
                                                                 23.5%                  2213 LINDOIA--138  1   -21.9    -7.4    24.2
                                                                 12.5%                  2246 TRES.PONT138  1    11.7     3.7    12.9
 2239  138  0   0.962     0.0     0.0    13.3     0.0     0.0     0.0
 SOCORRO--138  -100.0     0.0     0.0     4.1     0.0     0.0     0.0
                                                                 14.1%                  2179 BARREIRO-138  1   -13.3    -4.1    14.5
```

```
 2240  138  0   1.008     0.0     0.0    12.6     0.0     0.0     0.0
 SUMARE---138   -97.3     0.0     0.0     2.6     0.0     0.0     0.0
                                              11.1%                 2206 N.VENEZA-138  1   -11.5     0.5    11.4
                                               3.2%                 2208 IPE------138  1    -1.1    -3.1     3.3
CEPEL - CENTRO DE PESQUISAS DE ENERGIA ELETRICA - PROGRAMA DE ANALISE DE REDES - V08MAR05A                          PAG. 155

ANUAL 06/07 * SETEMBRO 2006 PESADA S/SE 19H N/NE 19H * ANAT0 - FSE - C13
RELATORIO COMPLETO DO SISTEMA * AREA  7 * *              CPFL                *

X----------------- D A D O S  -  B A R R A ------------------------X------------ F L U X O S  -  C I R C U I T O S ------------X
 DA BARRA      TENSAO GERACAO INJ EQV  CARGA   ELO CC  SHUNT    MOTOR
 NUM. KV TIPO   MOD/     MW/     MW/     MW/     MW/   Mvar/     MW/
     NOME       ANG     Mvar    Mvar    Mvar    Mvar   EQUIV    Mvar  PARA BARRA                    FLUXOS
                                                FLUXO % SHUNT L         NUM.     NOME     NC     MW    Mvar  MVA/V_d   TAP  DEFAS TIE
X------------X-------X-------X-------X-------X-------X-------X-------X----X------------X--X-------X-------X-------X------X-----X---X

 2241  138  0   1.015     0.0     0.0     0.0     0.0     0.0     0.0
 TANQUINHO138   -94.9     0.0     0.0     0.0     0.0     0.0     0.0
                                              88.5%                  171 CAMPINAS-138  1  -134.4    -9.1   132.8              01
                                              88.5%                  171 CAMPINAS-138  2  -134.4    -9.1   132.8              01
                                              88.5%                  171 CAMPINAS-138  3  -134.4    -9.1   132.8              01
                                              88.5%                  171 CAMPINAS-138  4  -134.4    -9.1   132.8              01
                                              88.5%                  171 CAMPINAS-138  5  -134.4    -9.1   132.8              01
                                              49.2%                 2170 AIR_LIQ--138  1    51.1    -5.6    50.7
                                              36.0%                 2184 BGE+MDEST138  1    35.3    12.8    37.0
                                              62.5%                 2217 MORUMBI--138  1    63.4   -15.5    64.4
                                              56.6%                 2219 NOV.APARE138  1    56.5   -17.6    58.3
                                              69.3%                 2221 NOTREDAME138  1    70.8    15.4    71.4
                                              48.4%                 2222 PAINEIRAS138  1    91.5    12.2    91.0
                                              48.4%                 2222 PAINEIRAS138  2    91.5    12.2    91.0
                                              71.9%                 2231 RHODIA---138  1    75.0     4.8    74.1
                                              70.4%                 2242 TANQUINHO-69  1    31.4    11.8    33.1 0.978*
                                              44.5%                 2243 TAQUARAL-138  1    44.9    12.3    45.9
                                              58.1%                 2250 VAL+GESSY138  1    60.7     2.6    59.9
 2242   69  0   1.015     0.0     0.0     4.4     0.0     0.0     0.0
 TANQUINHO-69   -98.5     0.0     0.0     0.8     0.0     0.0     0.0
                                              74.9%                 2104 SOUZAS----69  1    15.2    10.1    18.0
                                              24.5%                 2204 FIGUEIRA--69  1    11.9    -1.3    11.8
                                              68.9%                 2241 TANQUINHO138  1   -31.4    -9.6    32.4
 2243  138  0   1.005     0.0     0.0    44.6     0.0     0.0     0.0
 TAQUARAL-138   -95.5     0.0     0.0    12.5     0.0     0.0     0.0
                                              44.7%                 2241 TANQUINHO138  1   -44.6   -12.5    46.1
 2244  138  0   1.003     0.0     0.0    17.0     0.0     0.0     0.0
 REPLAN---138   -96.3     0.0     0.0     7.2     0.0     0.0     0.0
                                              41.9%                 2223 PAU+YPK--138  1    42.2    -9.7    43.2
                                              57.4%                 2231 RHODIA---138  1   -59.2     2.5    59.1
 2245  138  0   1.012     0.0     0.0     7.7     0.0     0.0     0.0
 TOYOBO---138   -97.0     0.0     0.0     3.3     0.0     0.0     0.0
                                              10.1%                 2191 CARIOBA--138  1    -8.6    -6.0    10.4
                                               2.7%                 2202 ELETROMET138  1     0.9     2.7     2.8
 2246  138  0   0.952     0.0     0.0    11.7     0.0     0.0     0.0
 TRES.PONT138  -100.7     0.0     0.0     4.6     0.0     0.0     0.0
                                              12.8%                 2238 SER.NEGRA138  1   -11.7    -4.6    13.2
CEPEL - CENTRO DE PESQUISAS DE ENERGIA ELETRICA - PROGRAMA DE ANALISE DE REDES - V08MAR05A                          PAG. 156

ANUAL 06/07 * SETEMBRO 2006 PESADA S/SE 19H N/NE 19H * ANAT0 - FSE - C13
RELATORIO COMPLETO DO SISTEMA * AREA  7 * *              CPFL                *

X----------------- D A D O S  -  B A R R A ------------------------X------------ F L U X O S  -  C I R C U I T O S ------------X
 DA BARRA      TENSAO GERACAO INJ EQV  CARGA   ELO CC  SHUNT    MOTOR
```

```
 NUM. KV TIPO   MOD/     MW/     MW/     MW/     MW/   Mvar/     MW/
     NOME       ANG     Mvar    Mvar    Mvar    Mvar   EQUIV    Mvar  PARA BARRA                    FLUXOS
                                                FLUXO % SHUNT L         NUM.     NOME     NC     MW    Mvar  MVA/V_d   TAP  DEFAS TIE
X------------X-------X-------X-------X-------X-------X-------X-------X----X------------X--X-------X-------X-------X------X-----X---X

 2247  138  0   0.996     0.0     0.0    33.4     0.0     0.0     0.0
 TREVO----138   -97.9     0.0     0.0     5.6     0.0     0.0     0.0
                                            30.1%                    2187 BVIST+BCH138  1   -28.5   -12.0    31.0
                                            15.8%                    2196 C.JARDIM-138  1   -12.4   -10.4    16.3
                                            43.7%                    2248 TREVO-----69  1    18.6    12.1    22.3 0.961*
                                            14.9%                    2251 VIRACOPOS138  1    14.9     3.3    15.4
                                            14.9%                    2251 VIRACOPOS138  2    14.9     3.3    15.4
                                            21.9%                    2280 ANDORINHA138  1   -41.0    -1.9    41.2
 2248   69  0   1.011     0.0     0.0     0.0     0.0     0.0     0.0
 TREVO-----69  -100.3     0.0     0.0     0.0     0.0     0.0     0.0
                                            17.5%                    2204 FIGUEIRA--69  1     1.9     8.3     8.4
                                            42.0%                    2247 TREVO----138  1   -18.6   -11.0    21.4
                                            76.3%                    2253 3M--------69  1    16.8     2.7    16.8
 2249  138  0   0.984     0.0     0.0    27.6     0.0     0.0     0.0
 UNILESTE-138   -98.9     0.0     0.0    10.3     0.0     0.0     0.0
                                            11.9%                    2193 CATERPILA138  1   -12.1     0.8    12.3
                                            18.8%                    2227 PIRMIRIM-138  1   -15.5   -11.1    19.4
 2250  138  0   0.998     0.0     0.0    30.8     0.0     0.0     0.0
 VAL+GESSY138   -97.0     0.0     0.0     8.8     0.0     0.0     0.0
                                            58.2%                    2241 TANQUINHO138  1   -59.7    -2.0    59.9
                                            28.9%                    2251 VIRACOPOS138  1    28.9    -6.8    29.8
 2251  138  0   0.995     0.0     0.0    16.0     0.0    29.7     0.0
 VIRACOPOS138   -98.1     0.0     0.0     3.8     0.0     0.0     0.0
                                             0.8%                    2183 BANDEIRAN138  1    -0.7    -0.9     1.2
                                            10.9%                    2214 MERDZ+DIC138  1    13.2     8.1    15.6
                                            35.5%                    2233 SAC+EATON138  1    30.1    20.4    36.5
                                            15.0%                    2247 TREVO----138  1   -14.9    -3.7    15.5
                                            15.0%                    2247 TREVO----138  2   -14.9    -3.7    15.5
                                            28.6%                    2250 VAL+GESSY138  1   -28.7     5.8    29.5
 2252    1  0   1.009     0.0     0.0    17.2     0.0     0.0     0.0
 FCP+YWH--138   -97.0     0.0     0.0     7.3     0.0     0.0     0.0
                                            29.3%                    2191 CARIOBA--138  1    -7.7   -29.4    30.2
                                            23.2%                    2228 POL+YST--138  1    -9.5    22.1    23.9
 2253   69  0   0.986     0.0     0.0    18.1     0.0     0.0     0.0
 3M--------69  -101.9     0.0     0.0     6.5     0.0     0.0     0.0
                                            20.1%                    2102 AMERICANA-69  1    -1.7    -4.0     4.4
                                            76.5%                    2248 TREVO-----69  1   -16.4    -2.5    16.8
 2254   69  0   0.959     5.0     0.0     9.7     0.0     0.0     0.0
 ALTINOPOL-69   -95.0     1.0     0.0     3.3     0.0     0.0     0.0
                                            16.1%                    2259 ALTIN.AUX-69  1    -4.7    -2.3     5.5
```





```
X----------------- D A D O S  -  B A R R A -------------------------X------------ F L U X O S  -  C I R C U I T O S ------------X
 DA BARRA      TENSAO GERACAO INJ EQV  CARGA   ELO CC  SHUNT    MOTOR
 NUM. KV TIPO   MOD/     MW/     MW/     MW/     MW/   Mvar/     MW/
     NOME       ANG     Mvar    Mvar    Mvar    Mvar   EQUIV    Mvar  PARA BARRA                    FLUXOS
                                                FLUXO % SHUNT L         NUM.     NOME     NC     MW    Mvar  MVA/V_d   TAP  DEFAS TIE
X------------X-------X-------X-------X-------X-------X-------X-------X----X------------X--X-------X-------X-------X------X-----X---X

 2255  138  0   0.985     0.0     0.0    33.0     0.0     0.0     0.0
 ANHA+MAGU138   -89.4     0.0     0.0    11.7     0.0     0.0     0.0
                                            15.6%                    2282 PIONEIROS138  1     6.7   -11.4    13.4
```

```
                                                  46.9%                 4229 Us.V.Rosario  1   -39.7    -0.3    40.4
 2256  138  0   0.982     0.0     0.0     5.2     0.0     0.0     0.0
 BARRINHA-138   -92.1     0.0     0.0     4.0     0.0     0.0     0.0
                                                  12.3%                 2137 Us.S. Adelia  1   -11.2     5.4    12.7
                                                  11.1%                 2285 PRADOPOLI138  1     6.0    -9.4    11.4
 2257  138  0   1.007     0.0     0.0    17.1     0.0     0.0     0.0
 BATATAIS-138   -93.4     0.0     0.0     5.2     0.0     0.0     0.0
                                                  22.3%                  187 M.MORAES-138  1   -24.2   -15.5    28.5                01
                                                   9.7%                 2260 BRODOSQUI138  1     7.1    10.3    12.4
 2258   69  0   0.996     0.0     0.0     8.2     0.0     0.0     0.0
 BONFIMPTA-69   -94.5     0.0     0.0     2.3     0.0     0.0     0.0
                                                  65.8%                 2278 MORROCIPO-69  1    -8.2    -2.3     8.6
 2259   69  0   0.989     0.0     0.0     0.0     0.0     0.0     0.0
 ALTIN.AUX-69   -94.1     0.0     0.0     0.0     0.0     0.0     0.0
                                                  15.3%                 2254 ALTINOPOL-69  1     4.8     1.8     5.2
                                                  10.4%                 2278 MORROCIPO-69  1    -1.4    -3.2     3.5
                                                  11.1%                 2279 NUPORANGA-69  1    -3.5     1.4     3.8
 2260  138  0   1.003     0.0     0.0     5.8     0.0     0.0     0.0
 BRODOSQUI138   -93.5     0.0     0.0     2.9     0.0     0.0     0.0
                                                  10.3%                 2257 BATATAIS-138  1    -7.1   -11.1    13.1
                                                   6.5%                 2273 JARDINOP-138  1     1.3     8.2     8.3
 2261  138  0   0.984     0.0     0.0     0.0     0.0     0.0     0.0
 CATU-----138   -89.0     0.0     0.0     0.0     0.0     0.0     0.0
                                                  34.5%                  190 PCOLOMBI-138  1   -45.9    -5.3    47.0                01
                                                  84.0%                 2262 CAT+PD+MIG69  1    33.8    20.8    40.3 0.930*
                                                  14.7%                 2325 UsAMOGIA-138  1    12.1   -15.5    20.0
 2262   69  0   1.013     0.0     0.0    12.7     0.0     0.0     0.0
 CAT+PD+MIG69   -93.4     0.0     0.0     6.4     0.0     0.0     0.0
                                                  78.1%                 2261 CATU-----138  1   -33.8   -17.4    37.5
                                                  22.0%                 2265 GUARA-----69  1     7.5     1.4     7.5
                                                  15.9%                 2267 IGARAPAVA-69  1     0.0     3.7     3.6
                                                  76.9%                 2272 ITUVERAVA 69  1    13.6     5.9    14.6
                                                   0.0%                 2283 PIO+SJB---69  1     0.0     0.0     0.0
 2263  138  0   1.013     0.0     0.0    10.2     0.0     0.0     0.0
 CRAVINHOS138   -92.5     0.0     0.0     5.0     0.0     0.0     0.0
                                                  33.4%                  564 RIBPRETO-138  1   -34.7    -2.7    34.4                05
                                                  23.6%                 2292 SAO.SIMAO138  1    24.5    -2.3    24.3
CEPEL - CENTRO DE PESQUISAS DE ENERGIA ELETRICA - PROGRAMA DE ANALISE DE REDES - V08MAR05A                                  PAG. 158

ANUAL 06/07 * SETEMBRO 2006 PESADA S/SE 19H N/NE 19H * ANAT0 - FSE - C13
RELATORIO COMPLETO DO SISTEMA * AREA  7 * *              CPFL              *

X----------------- D A D O S  -  B A R R A -------------------------X------------ F L U X O S  -  C I R C U I T O S ------------X
 DA BARRA      TENSAO GERACAO INJ EQV  CARGA   ELO CC  SHUNT    MOTOR
 NUM. KV TIPO   MOD/     MW/     MW/     MW/     MW/   Mvar/     MW/
     NOME       ANG     Mvar    Mvar    Mvar    Mvar   EQUIV    Mvar  PARA BARRA                    FLUXOS
                                                FLUXO % SHUNT L        NUM.     NOME     NC     MW    Mvar  MVA/V_d   TAP  DEFAS TIE
X------------X-------X-------X-------X-------X-------X-------X-------X----X------------X--X-------X-------X-------X------X-----X---X

 2264  138  0   1.002     0.0     0.0    40.6     0.0     0.0     0.0
 FRANCA---138   -91.6     0.0     0.0    18.5     0.0     0.0     0.0
                                                  30.8%                  187 M.MORAES-138  1   -19.9   -31.3    37.0                01
                                                  29.1%                  187 M.MORAES-138  2   -19.9   -31.3    37.0                01
                                                  23.2%                 2282 PIONEIROS138  1   -18.7    15.0    23.9
                                                  33.1%                 2286 RES+GUAN-138  1    17.8    29.1    34.1
 2265   69  0   1.002     0.0     0.0     7.4     0.0     0.0     0.0
 GUARA-----69   -94.0     0.0     0.0     1.5     0.0     0.0     0.0
                                                  22.2%                 2262 CAT+PD+MIG69  1    -7.4    -1.5     7.5
                                                   0.0%                 2283 PIO+SJB---69  1     0.0     0.0     0.0
 2266  138  0   0.981     0.0     0.0    29.0     0.0     0.0     0.0
```

```
 HUMA+PTAL138   -93.0     0.0     0.0    10.1     0.0     0.0     0.0
                                              16.3%                 2268 IGUAPE---138  1   -12.1   -11.2    16.8
                                               7.7%                 2290 SERTAOZIN138  1    -6.3    -4.5     7.9
                                              11.3%                 2329 PITANGUEI138  1     9.3     6.6    11.7
                                              19.8%                 4226 Pontal        1   -19.9    -1.0    20.3
 2267   69  0   0.997    10.0     0.0    10.0     0.0     0.0     0.0
 IGARAPAVA-69   -92.8     0.0     0.0     4.2     0.0     0.0     0.0
                                              18.3%                 2262 CAT+PD+MIG69  1     0.0    -4.2     4.2
 2268  138  0   0.992     0.0     0.0     0.0     0.0     0.0     0.0
 IGUAPE---138   -92.6     0.0     0.0     0.0     0.0     0.0     0.0
                                              32.4%                  564 RIBPRETO-138  1   -41.3   -44.1    60.9                05
                                              32.4%                  564 RIBPRETO-138  2   -41.3   -44.1    60.9                05
                                              41.4%                 2136 RINCAO---138  1   -42.3    -1.9    42.7
                                              12.6%                 2156 CELPAV---138  1   -10.4     7.6    13.0
                                              44.4%                 2236 PATRI+MET138  1    69.3    45.1    83.4
                                              15.3%                 2266 HUMA+PTAL138  1    12.2     9.7    15.7
                                               8.1%                 2285 PRADOPOLI138  1    -1.8     8.1     8.4
                                              41.8%                 2349 PETROBRAS138  1    42.0     7.8    43.1
                                              17.4%                 4227 Tie S.Ant.    1    13.4    11.7    18.0
 2269  138  0   0.982     0.0     0.0    37.3     0.0     0.0     0.0
 IPA+RBNE-138   -94.0     0.0     0.0    17.6     0.0     0.0     0.0
                                              67.4%                 2277 MORROCIPO138  1   -58.6   -34.9    69.4
                                              27.1%                 2293 V.ALBERTI138  1    21.3    17.3    27.9
 2270  138  0   0.980     0.0     0.0    22.4     0.0     0.0     0.0
 IPIRANGA-138   -93.7     0.0     0.0     9.2     0.0     0.0     0.0
                                              18.3%                 2293 V.ALBERTI138  1    18.4    -1.6    18.8
                                              41.1%                 2349 PETROBRAS138  1   -40.8    -7.6    42.3
CEPEL - CENTRO DE PESQUISAS DE ENERGIA ELETRICA - PROGRAMA DE ANALISE DE REDES - V08MAR05A                              PAG. 159

ANUAL 06/07 * SETEMBRO 2006 PESADA S/SE 19H N/NE 19H * ANAT0 - FSE - C13
RELATORIO COMPLETO DO SISTEMA * AREA  7 * *             CPFL                *

X----------------- D A D O S  -  B A R R A ------------------------X------------ F L U X O S  -  C I R C U I T O S ------------X
 DA BARRA      TENSAO GERACAO INJ EQV  CARGA   ELO CC  SHUNT    MOTOR
 NUM. KV TIPO   MOD/     MW/     MW/     MW/     MW/   Mvar/     MW/
     NOME       ANG     Mvar    Mvar    Mvar    Mvar   EQUIV    Mvar  PARA BARRA                    FLUXOS
                                                FLUXO % SHUNT L        NUM.     NOME     NC     MW    Mvar  MVA/V_d   TAP  DEFAS TIE
X------------X-------X-------X-------X-------X-------X-------X-------X----X------------X--X-------X-------X-------X------X-----X---X

 2271  138  0   0.993     0.0     0.0     4.6     0.0     0.0     0.0
 IPUA-----138   -89.0     0.0     0.0     2.3     0.0     0.0     0.0
                                              23.6%                 2282 PIONEIROS138  1    23.8    -3.5    24.3
                                              27.8%                 2322 MINERVA--138  1   -28.4     1.2    28.7
 2272   69  0   1.006     0.0     0.0    13.5     0.0     0.0     0.0
 ITUVERAVA 69   -93.6     0.0     0.0     5.9     0.0     0.0     0.0
                                              77.1%                 2262 CAT+PD+MIG69  1   -13.5    -5.9    14.6
 2273    1  0   1.002     0.0     0.0    10.9     0.0     0.0     0.0
 JARDINOP-138   -93.5     0.0     0.0     4.3     0.0     0.0     0.0
                                               6.7%                 2260 BRODOSQUI138  1    -1.3    -8.6     8.6
                                               8.2%                 2277 MORROCIPO138  1    -9.6     4.3    10.5
 2274  138  0   1.003     0.0     0.0    24.3     0.0     0.0     0.0
 LEAO.XIII138   -93.0     0.0     0.0    13.2     0.0     0.0     0.0
                                              49.5%                  564 RIBPRETO-138  1   -84.6   -39.3    93.0                05
                                              34.8%                 2277 MORROCIPO138  1    60.3    26.1    65.5
 2275    1  0   1.007     0.0     0.0     0.0     0.0     0.0     0.0
 USJOAQUIM-69   -92.4     0.0     0.0     0.0     0.0     0.0     0.0
                                              18.2%                 2105 US.DOURAD-69  1     6.2     0.5     6.2
                                              18.2%                 2283 PIO+SJB---69  1    -6.2    -0.5     6.2
 2276  138  0   0.966     8.5     0.0     5.0     0.0     0.0     0.0
 US.ELOY.C138   -99.4     0.0     0.0     2.1     0.0     0.0     0.0
```

```
                                                  6.1%                  2103 US.PINHAL138  1     3.5    -2.1     4.2
 2277  138  0   1.001     0.0     0.0    26.8     0.0     0.0     0.0
 MORROCIPO138   -93.1     0.0     0.0    15.7     0.0     0.0     0.0
                                                 47.3%                   564 RIBPRETO-138  1   -81.0   -36.9    88.9                05
                                                 67.0%                  2269 IPA+RBNE-138  1    59.2    35.6    69.0
                                                  8.7%                  2273 JARDINOP-138  1     9.7    -5.6    11.2
                                                 34.9%                  2274 LEAO.XIII138  1   -60.2   -26.0    65.6
                                                 35.2%                  2278 MORROCIPO-69  1     9.2     8.8    12.7 0.980F
                                                 25.2%                  2287 RIB.PRETO138  1    42.9    19.9    47.3
                                                 10.3%                  2288 PAT.PAULI138  1    -6.6   -11.5    13.2
 2278   69  0   1.004     0.0     0.0     0.0     0.0     0.0     0.0
 MORROCIPO-69   -94.2     0.0     0.0     0.0     0.0     0.0     0.0
                                                 65.5%                  2258 BONFIMPTA-69  1     8.3     2.2     8.5
                                                  8.7%                  2259 ALTIN.AUX-69  1     1.4     2.6     3.0
                                                 34.5%                  2277 MORROCIPO138  1    -9.2    -8.5    12.4
                                                 19.0%                  2289 SERRANA---69  1    -0.5     3.6     3.6
CEPEL - CENTRO DE PESQUISAS DE ENERGIA ELETRICA - PROGRAMA DE ANALISE DE REDES - V08MAR05A                                PAG. 160

ANUAL 06/07 * SETEMBRO 2006 PESADA S/SE 19H N/NE 19H * ANAT0 - FSE - C13
RELATORIO COMPLETO DO SISTEMA * AREA  7 * *             CPFL                *

X----------------- D A D O S  -  B A R R A -------------------------X------------ F L U X O S  -  C I R C U I T O S ------------X
 DA BARRA      TENSAO GERACAO INJ EQV  CARGA   ELO CC  SHUNT    MOTOR
 NUM. KV TIPO   MOD/     MW/     MW/     MW/     MW/   Mvar/     MW/
     NOME       ANG     Mvar    Mvar    Mvar    Mvar   EQUIV    Mvar  PARA BARRA                    FLUXOS
                                                FLUXO % SHUNT L        NUM.     NOME     NC     MW    Mvar  MVA/V_d   TAP  DEFAS TIE
X------------X-------X-------X-------X-------X-------X-------X-------X----X------------X--X-------X-------X-------X------X-----X---X

 2279   69  0   0.991     0.0     0.0     7.4     0.0     0.0     0.0
 NUPORANGA-69   -93.6     0.0     0.0     2.7     0.0     0.0     0.0
                                                 32.4%                  2105 US.DOURAD-69  1   -10.9    -1.1    11.0
                                                 11.4%                  2259 ALTIN.AUX-69  1     3.5    -1.6     3.9
 2280  138  0   0.998     0.0     0.0    40.8     0.0     0.0     0.0
 ANDORINHA138   -97.5     0.0     0.0     7.8     0.0     0.0     0.0
                                                 43.9%                  2222 PAINEIRAS138  1   -81.8    -9.5    82.5
                                                 21.9%                  2247 TREVO----138  1    41.0     1.7    41.1
 2281   69  0   0.941     0.0     0.0    20.5     0.0     0.0     0.0
 TRIANON--138   -74.2     0.0     0.0    14.7     0.0     0.0     0.0
                                                 27.9%                  2141 TRIAN-YP-138  1   -20.5   -14.7    26.8
 2282  138  0   0.990     0.0     0.0     0.0     0.0     0.0     0.0
 PIONEIROS138   -89.7     0.0     0.0     0.0     0.0     0.0     0.0
                                                 14.2%                  2255 ANHA+MAGU138  1    -6.7    10.1    12.2
                                                 25.5%                  2264 FRANCA---138  1    19.0   -17.7    26.2
                                                 23.4%                  2271 IPUA-----138  1   -23.7     2.6    24.1
                                                 38.2%                  2283 PIO+SJB---69  1    19.7     3.5    20.2 0.971*
                                                 31.5%                  2286 RES+GUAN-138  1    29.1   -13.4    32.4
                                                 15.1%                  2315 GAVEA----138  1   -15.4     0.7    15.5
                                                 19.5%                  2325 UsAMOGIA-138  1   -22.1    14.2    26.5
 2283   69  0   1.013     0.0     0.0    13.5     0.0     0.0     0.0
 PIO+SJB---69   -92.0     0.0     0.0     2.3     0.0     0.0     0.0
                                                  0.0%                  2262 CAT+PD+MIG69  1     0.0     0.0     0.0
                                                  0.0%                  2265 GUARA-----69  1     0.0     0.0     0.0
                                                 18.1%                  2275 USJOAQUIM-69  1     6.2     0.4     6.2
                                                 37.1%                  2282 PIONEIROS138  1   -19.7    -2.7    19.7
 2284  138  0   0.995     0.0     0.0    35.7     0.0     0.0     0.0
 JMRAJO+VF138   -98.0     0.0     0.0    15.2     0.0     0.0     0.0
                                                 11.1%                  2214 MERDZ+DIC138  1    15.6     2.2    15.8
                                                 38.1%                  2226 PIRELLI--138  1   -51.3   -17.4    54.4
 2285  138  0   0.987     0.0     0.0     4.2     0.0     0.0     0.0
 PRADOPOLI138   -92.4     0.0     0.0     1.6     0.0     0.0     0.0
```

```
                                                 9.8%                 2256 BARRINHA-138  1    -6.0     8.0    10.1
                                                 9.6%                 2268 IGUAPE---138  1     1.8    -9.6     9.9
 2286  138  0   0.991     0.0     0.0    46.4     0.0     0.0     0.0
 RES+GUAN-138   -91.7     0.0     0.0    17.8     0.0     0.0     0.0
                                                33.7%                 2264 FRANCA---138  1   -17.7   -29.5    34.7
                                                30.4%                 2282 PIONEIROS138  1   -28.7    11.7    31.3
CEPEL - CENTRO DE PESQUISAS DE ENERGIA ELETRICA - PROGRAMA DE ANALISE DE REDES - V08MAR05A                          PAG. 161

ANUAL 06/07 * SETEMBRO 2006 PESADA S/SE 19H N/NE 19H * ANAT0 - FSE - C13
RELATORIO COMPLETO DO SISTEMA * AREA  7 * *             CPFL                *

X----------------- D A D O S  -  B A R R A ------------------------X------------ F L U X O S  -  C I R C U I T O S ------------X
 DA BARRA      TENSAO GERACAO INJ EQV  CARGA   ELO CC  SHUNT    MOTOR
 NUM. KV TIPO   MOD/     MW/     MW/     MW/     MW/   Mvar/     MW/
     NOME       ANG     Mvar    Mvar    Mvar    Mvar   EQUIV    Mvar  PARA BARRA                    FLUXOS
                                                FLUXO % SHUNT L         NUM.     NOME     NC     MW    Mvar  MVA/V_d   TAP  DEFAS TIE
X------------X-------X-------X-------X-------X-------X-------X-------X----X------------X--X-------X-------X-------X------X-----X---X

 2287  138  0   0.998     0.0     0.0    42.9     0.0     0.0     0.0
 RIB.PRETO138   -93.4     0.0     0.0    20.0     0.0     0.0     0.0
                                                25.2%                 2277 MORROCIPO138  1   -42.9   -20.0    47.4
 2288  138  0   1.021     0.0     0.0     5.3     0.0     0.0     0.0
 PAT.PAULI138   -92.7     0.0     0.0     1.6     0.0     0.0     0.0
                                                 7.0%                 2277 MORROCIPO138  1     6.6     6.3     8.9
                                                10.9%                 2333 DIAMANTE-138  1   -11.9    -7.9    14.0
 2289   69  0   0.996    15.0     0.0    14.5     0.0     0.0     0.0
 SERRANA---69   -93.7     0.0     0.0     3.9     0.0     0.0     0.0
                                                20.8%                 2278 MORROCIPO-69  1     0.5    -3.9     3.9
 2290  138  0   0.982     0.0     0.0    19.0     0.0     0.0     0.0
 SERTAOZIN138   -92.9     0.0     0.0     8.8     0.0     0.0     0.0
                                                 7.4%                 2266 HUMA+PTAL138  1     6.3     4.1     7.7
                                                28.1%                 4227 Tie S.Ant.    1   -25.3   -12.9    28.9
 2291  138  0   0.982     0.0     0.0     8.4     0.0     0.0     0.0
 ORIENTO--138   -69.6     0.0     0.0     3.6     0.0     0.0     0.0
                                                77.5%                  678 ORIENT-YP138  1    -8.4    -3.6     9.3                06
 2292  138  0   1.005     0.0     0.0     8.3     0.0     0.0     0.0
 SAO.SIMAO138   -93.8     0.0     0.0     3.5     0.0     0.0     0.0
                                                23.5%                 2263 CRAVINHOS138  1   -24.3     0.4    24.2
                                                15.9%                 2343 ITAIP+CJU138  1    16.0    -3.9    16.4
 2293  138  0   0.978     0.0     0.0    39.6     0.0     0.0     0.0
 V.ALBERTI138   -94.1     0.0     0.0    16.6     0.0     0.0     0.0
                                                27.3%                 2269 IPA+RBNE-138  1   -21.3   -17.5    28.1
                                                18.2%                 2270 IPIRANGA-138  1   -18.3     0.9    18.8
 2294  138  0   0.999     0.0     0.0    19.4     0.0     0.0     0.0
 STA.CECIL138   -98.1     0.0     0.0     3.9     0.0     0.0     0.0
                                                51.1%                  568 S.BARB-2-138  1   -48.9   -19.3    52.6                05
                                                32.3%                 2234 SALTINHO-138  1    29.5    15.4    33.3
 2295   69  0   0.969     0.0     0.0     4.3     0.0     0.0     0.0
 ALTAIR----69   -95.4     0.0     0.0     1.2     0.0     0.0     0.0
                                                15.9%                 2321 J.PAULIST-69  1    -4.3    -1.2     4.6
 2296  138  0   0.946     0.0     0.0    20.9     0.0     0.0     0.0
 ARACATUBA138   -74.0     0.0     0.0     9.3     0.0     0.0     0.0
                                                62.0%                 2141 TRIAN-YP-138  1   -51.8   -22.0    59.5
                                                68.0%                 2297 ARACATUBA-69  1    30.9    12.7    35.4 0.912*
CEPEL - CENTRO DE PESQUISAS DE ENERGIA ELETRICA - PROGRAMA DE ANALISE DE REDES - V08MAR05A                          PAG. 162

ANUAL 06/07 * SETEMBRO 2006 PESADA S/SE 19H N/NE 19H * ANAT0 - FSE - C13
RELATORIO COMPLETO DO SISTEMA * AREA  7 * *             CPFL                *

X----------------- D A D O S  -  B A R R A ------------------------X------------ F L U X O S  -  C I R C U I T O S ------------X
```

```
 DA BARRA      TENSAO GERACAO INJ EQV  CARGA   ELO CC  SHUNT    MOTOR
 NUM. KV TIPO   MOD/     MW/     MW/     MW/     MW/   Mvar/     MW/
     NOME       ANG     Mvar    Mvar    Mvar    Mvar   EQUIV    Mvar  PARA BARRA                    FLUXOS
                                                FLUXO % SHUNT L         NUM.     NOME     NC     MW    Mvar  MVA/V_d   TAP  DEFAS TIE
X------------X-------X-------X-------X-------X-------X-------X-------X----X------------X--X-------X-------X-------X------X-----X---X

 2297   69  0   1.013     0.0     0.0     0.0     0.0     0.0     0.0
 ARACATUBA-69   -77.6     0.0     0.0     0.0     0.0     0.0     0.0
                                              62.0%                    2296 ARACATUBA138  1   -30.9   -10.5    32.2
                                              46.3%                    2299 BAGUACU---69  1    13.8     6.0    14.8
                                              51.6%                    2317 GUARARAPE-69  1    17.2     4.5    17.5
 2298  138  0   0.965     0.0     0.0     9.0     0.0     0.0     0.0
 GAIVOTA--138   -86.4     0.0     0.0     6.2     0.0     0.0     0.0
                                              22.9%                    2146 AG+DU/AG-138  1   -21.0    -8.7    23.6
                                              12.3%                    2161 LENCOIS--138  1    12.0     2.5    12.7
 2299   69  0   0.986     0.0     0.0    13.5     0.0     0.0     0.0
 BAGUACU---69   -78.6     0.0     0.0     5.8     0.0     0.0     0.0
                                              46.6%                    2297 ARACATUBA-69  1   -13.5    -5.8    14.9
 2300   69  0   1.036     0.0     0.0     1.7     0.0     0.0     0.0
 BARBOSA---69   -78.2     0.0     0.0     0.4     0.0     0.0     0.0
                                               5.6%                     655 PENAPOLIS-69  1    -1.7    -0.4     1.7               06
 2301  138  0   1.009     0.0     0.0     0.0     0.0     0.0     0.0
 BARRETOS-138   -86.2     0.0     0.0     0.0     0.0     0.0     0.0
                                              31.2%                     190 PCOLOMBI-138  1   -39.4     0.4    39.0               01
                                              27.2%                    2315 GAVEA----138  1    28.2    -2.0    28.1
                                              30.0%                    2316 COLOMBIA-138  1   -37.8     0.7    37.5
                                              47.1%                    2322 MINERVA--138  1    48.9     0.9    48.5
 2302   69  0   1.005     0.0     0.0     0.0     0.0     0.0     0.0
 BARRETOS--69   -93.5     0.0     0.0     0.0     0.0     0.0     0.0
                                              84.8%                    2309 CHAOPRETO-69  1    21.5    12.1    24.6
                                              54.9%                    2310 BARRETOS2138  1   -26.0   -12.2    28.6
                                              15.2%                    2321 J.PAULIST-69  1     4.4     0.1     4.4
 2303    1  0   1.005     0.0     0.0     0.0     0.0     0.0     0.0
 USCANDIDA-69   -93.3     0.0     0.0     0.0     0.0     0.0     0.0
                                              21.8%                    2101 GAVIAO----69  1    -4.4     4.6     6.3
                                              21.8%                    2112 BOCAINA---69  1     4.4    -4.6     6.3
 2304   69  0   1.007     0.0     0.0     9.1     0.0     0.0     0.0
 COROADOS-138   -79.5     0.0     0.0     2.5     0.0     0.0     0.0
                                              29.3%                    2305 BRA+GLI---69  1    -9.1    -2.5     9.4
 2305   69  0   1.017     0.0     0.0     5.5     0.0     0.0     0.0
 BRA+GLI---69   -79.1     0.0     0.0     2.0     0.0     0.0     0.0
                                              47.1%                     655 PENAPOLIS-69  1   -14.7    -4.4    15.1               06
                                              29.2%                    2304 COROADOS-138  1     9.2     2.4     9.3
```





```
X----------------- D A D O S  -  B A R R A -------------------------X------------ F L U X O S  -  C I R C U I T O S ------------X
 DA BARRA      TENSAO GERACAO INJ EQV  CARGA   ELO CC  SHUNT    MOTOR
 NUM. KV TIPO   MOD/     MW/     MW/     MW/     MW/   Mvar/     MW/
     NOME       ANG     Mvar    Mvar    Mvar    Mvar   EQUIV    Mvar  PARA BARRA                    FLUXOS
                                                FLUXO % SHUNT L         NUM.     NOME     NC     MW    Mvar  MVA/V_d   TAP  DEFAS TIE
X------------X-------X-------X-------X-------X-------X-------X-------X----X------------X--X-------X-------X-------X------X-----X---X

 2306  138  0   0.969     0.0     0.0    44.3     0.0    30.0     0.0
 CAI+M+BE-138   -93.1     0.0     0.0    17.6     0.0     0.0     0.0
                                              14.2%                    2124 JABOTICAB138  1   -14.1    -1.4    14.6
                                              13.4%                    2130 PIRANGI--138  1    12.7     4.1    13.8
                                              13.4%                    2130 PIRANGI--138  2    12.7     4.1    13.8
```

```
                                                  7.3%                 2140 TAIUVA---138  1    -7.1     1.8     7.5
                                                 26.0%                 2313 CUTRALE--138  1   -25.5     4.5    26.7
                                                  6.2%                 2335 VIRADOURO138  1     5.0    -3.7     6.4
                                                 28.4%                 2340 COLINA---138  1   -28.1     2.9    29.2
 2307  138  0   1.019     0.0     0.0    22.3     0.0     0.0     0.0
 HORTOLAND138   -96.3     0.0     0.0    12.4     0.0     0.0     0.0
                                                 43.2%                  571 SUMARE---138  1   -74.7   -35.6    81.2                05
                                                 29.9%                 2219 NOV.APARE138  1    52.4    23.2    56.2
 2308   69  0   0.979     0.0     0.0     6.6     0.0     0.0     0.0
 CAJOBI----69   -96.5     0.0     0.0     1.5     0.0     0.0     0.0
                                                 31.4%                 2131 PIRANGI---69  1    -6.6    -1.5     6.9
 2309   69  0   0.971     0.0     0.0    21.0     0.0     0.0     0.0
 CHAOPRETO-69   -94.5     0.0     0.0    11.5     0.0     0.0     0.0
                                                 85.1%                 2302 BARRETOS--69  1   -21.0   -11.5    24.7
 2310  138  0   0.982     0.0     0.0     0.0     0.0     0.0     0.0
 BARRETOS2138   -90.3     0.0     0.0     0.0     0.0     0.0     0.0
                                                 58.1%                  190 PCOLOMBI-138  1  -106.5   -12.0   109.2                01
                                                 57.9%                 2302 BARRETOS--69  1    26.0    14.1    30.1 0.950*
                                                 39.2%                 2313 CUTRALE--138  1    39.6    -0.2    40.4
                                                  5.6%                 2320 J.PAULIST138  1     5.6     0.8     5.8
                                                 33.1%                 2340 COLINA---138  1    35.3    -2.6    36.1
 2311  138  0   0.964     0.0     0.0    14.6     0.0     0.0     0.0
 GUARANI--138   -73.7     0.0     0.0     4.4     0.0     0.0     0.0
                                                 63.3%                  653 GUARANIY-138  1   -14.6    -4.4    15.8                06
 2312  138  0   0.977     0.0     0.0    28.4     0.0     0.0     0.0
 CONGONHAS138   -81.6     0.0     0.0     9.0     0.0     0.0     0.0
                                                 22.0%                 2330 PRIMAVERA138  1   -21.5    -5.4    22.7
                                                  7.8%                 2332 AMERICA--138  1    -6.9    -3.6     8.0
 2313  138  0   0.972     0.0     0.0    13.5     0.0     0.0     0.0
 CUTRALE--138   -91.8     0.0     0.0     5.8     0.0     0.0     0.0
                                                 26.3%                 2306 CAI+M+BE-138  1    25.7    -5.6    27.1
                                                 39.2%                 2310 BARRETOS2138  1   -39.2    -0.2    40.4
 2314  138  0   1.019     0.0     0.0    15.9     0.0     0.0     0.0
 PINHAL---138   -95.3     0.0     0.0     4.9     0.0     0.0     0.0
                                                 20.4%                  700 PINHAL-YP138  1   -15.9    -4.9    16.3                06
CEPEL - CENTRO DE PESQUISAS DE ENERGIA ELETRICA - PROGRAMA DE ANALISE DE REDES - V08MAR05A                                 PAG. 164

ANUAL 06/07 * SETEMBRO 2006 PESADA S/SE 19H N/NE 19H * ANAT0 - FSE - C13
RELATORIO COMPLETO DO SISTEMA * AREA  7 * *              CPFL              *

X----------------- D A D O S  -  B A R R A -------------------------X------------ F L U X O S  -  C I R C U I T O S ------------X
 DA BARRA      TENSAO GERACAO INJ EQV  CARGA   ELO CC  SHUNT    MOTOR
 NUM. KV TIPO   MOD/     MW/     MW/     MW/     MW/   Mvar/     MW/
     NOME       ANG     Mvar    Mvar    Mvar    Mvar   EQUIV    Mvar  PARA BARRA                  FLUXOS
                                                FLUXO % SHUNT L         NUM.     NOME     NC     MW    Mvar  MVA/V_d   TAP  DEFAS TIE
X------------X-------X-------X-------X-------X-------X-------X-------X----X------------X--X-------X-------X-------X------X-----X---X

 2315  138  0   0.996     0.0     0.0    12.3     0.0     0.0     0.0
 GAVEA----138   -88.2     0.0     0.0     4.5     0.0     0.0     0.0
                                                 15.7%                 2282 PIONEIROS138  1    15.5    -4.2    16.2
                                                 27.1%                 2301 BARRETOS-138  1   -27.8    -0.3    28.0
 2316  138  0   1.016     0.0     0.0     2.8     0.0     0.0     0.0
 COLOMBIA-138   -85.0     0.0     0.0     0.6     0.0     0.0     0.0
                                                 32.2%                  190 PCOLOMBI-138  1   -40.9     0.7    40.3                01
                                                 30.0%                 2301 BARRETOS-138  1    38.1    -1.3    37.5
 2317   69  0   1.002     0.0     0.0    13.9     0.0     0.0     0.0
 GUARARAPE-69   -78.2     0.0     0.0     4.0     0.0     0.0     0.0
                                                 51.6%                 2297 ARACATUBA-69  1   -17.0    -4.4    17.6
                                                  9.3%                 2327 PIACATU---69  1     3.1     0.4     3.2
 2318   69  0   0.953     0.0     0.0     3.3     0.0     0.0     0.0
```

```
 ICEM------69   -89.1     0.0     0.0     0.8     0.0     0.0     0.0
                                               12.3%                 2326 NGR+PALEST69  1    -3.3    -0.8     3.6
 2319   69  0   1.002     0.0     0.0    13.9     0.0     0.0     0.0
 J.BONIFAC-69   -82.5     0.0     0.0     5.1     0.0     0.0     0.0
                                               43.5%                  672 UBARANA---69  1   -13.9    -5.1    14.8                06
 2320  138  0   0.977     0.0     0.0    15.5     0.0     0.0     0.0
 J.PAULIST138   -90.6     0.0     0.0     4.8     0.0     0.0     0.0
                                                6.5%                 2310 BARRETOS2138  1    -5.6    -3.4     6.7
                                               10.0%                 4223 Tie Guarani   1    -9.9    -1.4    10.3
 2321   69  0   0.985     0.0     0.0     0.0     0.0     0.0     0.0
 J.PAULIST-69   -94.7     0.0     0.0     0.0     0.0     0.0     0.0
                                               15.5%                 2295 ALTAIR----69  1     4.4     0.8     4.5
                                               15.5%                 2302 BARRETOS--69  1    -4.4    -0.8     4.5
 2322  138  0   1.006     0.0     0.0    19.9     0.0     0.0     0.0
 MINERVA--138   -86.5     0.0     0.0     4.9     0.0     0.0     0.0
                                               28.2%                 2271 IPUA-----138  1    28.9    -4.0    29.0
                                               47.1%                 2301 BARRETOS-138  1   -48.8    -0.9    48.5
 2323   69  0   1.022     0.0     0.0     0.0     0.0     0.0     0.0
 MIRASSOL--69   -85.3     0.0     0.0     0.0     0.0     0.0     0.0
                                               56.4%                 2324 MTE.APRAZ-69  1    15.8     5.3    16.4
                                               53.0%                 2326 NGR+PALEST69  1    15.2     3.8    15.4
                                               64.7%                 2328 MIR+AERO-138  1   -31.1    -9.1    31.7
 2324   69  0   0.992     0.0     0.0     7.5     0.0     0.0     0.0
 MTE.APRAZ-69   -86.6     0.0     0.0     2.5     0.0     0.0     0.0
                                               56.7%                 2323 MIRASSOL--69  1   -15.5    -5.1    16.4
                                               29.2%                 2334 TANABI----69  1     8.0     2.6     8.5
CEPEL - CENTRO DE PESQUISAS DE ENERGIA ELETRICA - PROGRAMA DE ANALISE DE REDES - V08MAR05A                          PAG. 165

ANUAL 06/07 * SETEMBRO 2006 PESADA S/SE 19H N/NE 19H * ANAT0 - FSE - C13
RELATORIO COMPLETO DO SISTEMA * AREA  7 * *             CPFL                 *

X----------------- D A D O S  -  B A R R A -------------------------X------------ F L U X O S  -  C I R C U I T O S ------------X
 DA BARRA      TENSAO GERACAO INJ EQV  CARGA   ELO CC  SHUNT    MOTOR
 NUM. KV TIPO   MOD/     MW/     MW/     MW/     MW/   Mvar/     MW/
     NOME       ANG     Mvar    Mvar    Mvar    Mvar   EQUIV    Mvar  PARA BARRA                    FLUXOS
                                                FLUXO % SHUNT L         NUM.     NOME     NC     MW    Mvar  MVA/V_d   TAP  DEFAS TIE
X------------X-------X-------X-------X-------X-------X-------X-------X----X------------X--X-------X-------X-------X------X-----X---X

 2325    1  0   0.988    10.0     0.0     0.0     0.0     0.0     0.0
 UsAMOGIA-138   -89.4     0.0     0.0     0.0     0.0     0.0     0.0
                                               14.1%                 2261 CATU-----138  1   -12.1    14.6    19.2
                                               19.7%                 2282 PIONEIROS138  1    22.1   -14.6    26.8
 2326   69  0   0.962     0.0     0.0    11.2     0.0     0.0     0.0
 NGR+PALEST69   -88.5     0.0     0.0     2.9     0.0     0.0     0.0
                                               12.0%                 2318 ICEM------69  1     3.3     0.5     3.5
                                               53.5%                 2323 MIRASSOL--69  1   -14.5    -3.4    15.5
 2327   69  0   0.989     0.0     0.0     3.1     0.0     0.0     0.0
 PIACATU---69   -78.9     0.0     0.0     1.0     0.0     0.0     0.0
                                                9.7%                 2317 GUARARAPE-69  1    -3.1    -1.0     3.3
 2328  138  0   0.990     0.0     0.0    23.7     0.0    29.4     0.0
 MIR+AERO-138   -81.8     0.0     0.0     7.5     0.0     0.0     0.0
                                               54.7%                  665 SJRPRETO-138  1   -54.8    10.6    56.4                06
                                               68.2%                 2323 MIRASSOL--69  1    31.1    11.3    33.4 0.949*
 2329  138  0   0.973     0.0     0.0     7.5     0.0     0.0     0.0
 PITANGUEI138   -93.3     0.0     0.0     3.0     0.0     0.0     0.0
                                               12.4%                 2266 HUMA+PTAL138  1    -9.3    -8.2    12.7
                                                5.5%                 2335 VIRADOURO138  1     1.8     5.2     5.6
 2330  138  0   0.983     0.0     0.0    45.5     0.0     0.0     0.0
 PRIMAVERA138   -81.1     0.0     0.0    20.1     0.0     0.0     0.0
                                               70.6%                  665 SJRPRETO-138  1   -67.1   -24.7    72.7                06
```

```
                                                  21.8%                 2312 CONGONHAS138  1    21.6     4.6    22.4
 2331  138  0   0.989     0.0     0.0    47.3     0.0    29.3     0.0
 SJRP+AUS-138   -80.9     0.0     0.0    19.3     0.0     0.0     0.0
                                                  49.6%                  665 SJRPRETO-138  1   -49.9    -8.0    51.1                06
                                                  47.1%                  665 SJRPRETO-138  2   -48.0    -2.4    48.5                06
                                                  53.5%                 2332 AMERICA--138  1    50.5    20.5    55.1
 2332  138  0   0.978     0.0     0.0    43.3     0.0     0.0     0.0
 AMERICA--138   -81.5     0.0     0.0    17.3     0.0     0.0     0.0
                                                   7.5%                 2312 CONGONHAS138  1     6.9     3.0     7.7
                                                  53.8%                 2331 SJRP+AUS-138  1   -50.2   -20.3    55.4
 2333  138  0   1.023     0.0     0.0    22.3     0.0     0.0     0.0
 DIAMANTE-138   -92.6     0.0     0.0     9.8     0.0     0.0     0.0
                                                  29.3%                  187 M.MORAES-138  1   -34.2   -17.3    37.5                01
                                                  10.8%                 2288 PAT.PAULI138  1    11.9     7.5    13.8
 2334   69  0   0.975     0.0     0.0     7.9     0.0     0.0     0.0
 TANABI----69   -87.4     0.0     0.0     2.7     0.0     0.0     0.0
                                                  29.5%                 2324 MTE.APRAZ-69  1    -7.9    -2.7     8.6
CEPEL - CENTRO DE PESQUISAS DE ENERGIA ELETRICA - PROGRAMA DE ANALISE DE REDES - V08MAR05A                                PAG. 166

ANUAL 06/07 * SETEMBRO 2006 PESADA S/SE 19H N/NE 19H * ANAT0 - FSE - C13
RELATORIO COMPLETO DO SISTEMA * AREA  7 * *             CPFL                 *

X----------------- D A D O S  -  B A R R A ------------------------X------------ F L U X O S  -  C I R C U I T O S ------------X
 DA BARRA      TENSAO GERACAO INJ EQV  CARGA   ELO CC  SHUNT    MOTOR
 NUM. KV TIPO   MOD/     MW/     MW/     MW/     MW/   Mvar/     MW/
     NOME       ANG     Mvar    Mvar    Mvar    Mvar   EQUIV    Mvar  PARA BARRA                    FLUXOS
                                                FLUXO % SHUNT L         NUM.     NOME     NC     MW    Mvar  MVA/V_d   TAP  DEFAS TIE
X------------X-------X-------X-------X-------X-------X-------X-------X----X------------X--X-------X-------X-------X------X-----X---X

 2335  138  0   0.969     0.0     0.0     6.8     0.0     0.0     0.0
 VIRADOURO138   -93.2     0.0     0.0     3.8     0.0     0.0     0.0
                                                   5.6%                 2306 CAI+M+BE-138  1    -5.0     2.6     5.8
                                                   6.7%                 2329 PITANGUEI138  1    -1.8    -6.4     6.9
 2336  138  0   0.957     0.0     0.0    29.4     0.0     0.0     0.0
 AMPARO---138  -102.4     0.0     0.0     8.8     0.0     0.0     0.0
                                                  31.1%                  680 AMPARO-YP138  1   -29.4    -8.8    32.1                06
 2337  138  0   1.012     0.0     0.0    27.5     0.0     0.0     0.0
 AUXILIADO138   -90.4     0.0     0.0     9.1     0.0     0.0     0.0
                                                  35.8%                  631 AUXILI-YP138  1   -27.5    -9.1    28.6                06
 2338  138  0   1.002     0.0     0.0    10.4     0.0     0.0     0.0
 DOISCORRE138   -91.6     0.0     0.0     3.0     0.0     0.0     0.0
                                                  43.2%                  686 DOISCO-YP138  1   -10.4    -3.0    10.8                06
 2339  138  0   0.988     0.0     0.0    15.6     0.0     0.0     0.0
 DESCALVAD138   -95.6     0.0     0.0     5.0     0.0     0.0     0.0
                                                  16.1%                  685 DESCAL-YP138  1   -15.6    -5.0    16.6                06
 2340  138  0   0.974     0.0     0.0     6.6     0.0     0.0     0.0
 COLINA---138   -91.9     0.0     0.0     1.9     0.0     0.0     0.0
                                                  28.5%                 2306 CAI+M+BE-138  1    28.4    -3.8    29.4
                                                  33.0%                 2310 BARRETOS2138  1   -35.0     1.9    36.0
 2341  138  0   1.023     0.0     0.0    28.9     0.0     0.0     0.0
 IBIT+ITAP138   -81.4     0.0     0.0    11.3     0.0     0.0     0.0
                                                  23.7%                  644 IBIT-YP138    1   -28.9   -11.3    30.3                06
 2342  138  0   0.956     0.0     0.0    15.6     0.0     0.0     0.0
 IPORA----138   -73.8     0.0     0.0     4.3     0.0     0.0     0.0
                                                  67.7%                  646 IPORA-YP-138  1   -15.6    -4.3    16.9                06
 2343  138  0   1.003     0.0     0.0    29.5     0.0     0.0     0.0
 ITAIP+CJU138   -94.4     0.0     0.0    12.4     0.0     0.0     0.0
                                                  19.5%                  689 ITAIPA-YP138  1   -13.6   -14.9    20.1                06
                                                  15.6%                 2292 SAO.SIMAO138  1   -15.9     2.5    16.1
 2344  138  0   0.995     0.0     0.0    17.1     0.0     0.0     0.0
```

```
 ITAPIRA--138   -97.3     0.0     0.0     5.9     0.0     0.0     0.0
                                               81.3%                 696 MMIRIM-2-138  1   -73.6   -24.8    78.1              06
                                               46.8%                2127 PRADOS---138  1    56.5    18.9    59.9
 2345  138  0   1.029     0.0     0.0    23.4     0.0     0.0     0.0
 PENAPOLIS138   -75.4     0.0     0.0     8.9     0.0     0.0     0.0
                                               21.1%                 656 PENAPO-YP138  1   -23.4    -8.9    24.3              06
CEPEL - CENTRO DE PESQUISAS DE ENERGIA ELETRICA - PROGRAMA DE ANALISE DE REDES - V08MAR05A                                PAG. 167

ANUAL 06/07 * SETEMBRO 2006 PESADA S/SE 19H N/NE 19H * ANAT0 - FSE - C13
RELATORIO COMPLETO DO SISTEMA * AREA  7 * *             CPFL                *

X----------------- D A D O S  -  B A R R A ------------------------X------------ F L U X O S  -  C I R C U I T O S ------------X
 DA BARRA      TENSAO GERACAO INJ EQV  CARGA   ELO CC  SHUNT    MOTOR
 NUM. KV TIPO   MOD/     MW/     MW/     MW/     MW/   Mvar/     MW/
     NOME       ANG     Mvar    Mvar    Mvar    Mvar   EQUIV    Mvar  PARA BARRA                    FLUXOS
                                                FLUXO % SHUNT L         NUM.     NOME      NC     MW    Mvar  MVA/V_d   TAP  DEFAS TIE
X------------X-------X-------X-------X-------X-------X-------X-------X----X------------X--X-------X-------X-------X------X-----X---X

 2346  138  0   0.981     0.0     0.0    29.4     0.0     0.0     0.0
 SAOCARLOS138   -94.8     0.0     0.0     9.2     0.0     0.0     0.0
                                               39.3%                 702 SCARLO-YP138  1   -29.4    -9.2    31.4              06
 2347  138  0   0.986     0.0     0.0     5.3     0.0     0.0     0.0
 VALPARAIS138   -69.6     0.0     0.0     1.6     0.0     0.0     0.0
                                               80.2%                 673 VALPARAIS138  1    -5.3    -1.6     5.6              06
 2348  138  0   1.001     0.0     0.0    18.2     0.0     0.0     0.0
 VILAVENTU138   -80.2     0.0     0.0     6.7     0.0     0.0     0.0
                                                SUP  101.9%                 675 VVENTU-YP138  1   -18.2    -6.7    19.4              06
 2349  138  0   0.986     0.0     0.0     0.9     0.0     0.0     0.0
 PETROBRAS138   -93.2     0.0     0.0     0.4     0.0     0.0     0.0
                                               41.9%                2268 IGUAPE---138  1   -41.8    -7.9    43.2
                                               41.0%                2270 IPIRANGA-138  1    40.9     7.5    42.2
 2550    1  0   0.982     0.0     0.0    12.3     0.0     0.0     0.0
 TECUMSEH-138   -94.5     0.0     0.0     3.0     0.0     0.0     0.0
                                               16.1%                 707 TECUMSEY-138  1   -12.3    -3.0    12.9              06
 4220    1  0   1.012    40.0     0.0     0.0     0.0     0.0     0.0
 Us B. Grande   -88.9     0.0     0.0     0.0     0.0     0.0     0.0
                                               38.4%                4221 Tie B.Grande  1    40.0     0.0    39.5
 4221    1  0   1.011     0.0     0.0     0.0     0.0     0.0     0.0
 Tie B.Grande   -89.1     0.0     0.0     0.0     0.0     0.0     0.0
                                               34.9%                2172 SAOMANUEL138  1    36.3    -1.3    35.9
                                                3.8%                2178 ZILLO----138  1     3.7     1.4     3.9
                                               38.4%                4220 Us B. Grande  1   -40.0    -0.1    39.5
 4222    1  0   1.010    20.0     0.0     0.0     0.0     0.0     0.0
 Equipav        -80.3     0.0     0.0     0.0     0.0     0.0     0.0
                                               38.1%                2162 LINS+FBER138  1    20.0     0.0    19.8
 4223    1  0   0.980     0.0     0.0     0.0     0.0     0.0     0.0
 Tie Guarani    -90.3     0.0     0.0     0.0     0.0     0.0     0.0
                                                9.9%                2320 J.PAULIST138  1     9.9     0.4    10.2
                                                9.9%                4224 Guarani       1    -9.9    -0.4    10.2
 4224    1  0   0.986    10.0     0.0     0.0     0.0     0.0     0.0
 Guarani        -90.2     0.0     0.0     0.0     0.0     0.0     0.0
                                                9.9%                4223 Tie Guarani   1    10.0     0.0    10.1
 4225    1  0   0.985    20.0     0.0     0.0     0.0     0.0     0.0
 Us.Sta Elisa   -92.4     0.0     0.0     0.0     0.0     0.0     0.0
                                               19.7%                4226 Pontal        1    20.0     0.0    20.3
CEPEL - CENTRO DE PESQUISAS DE ENERGIA ELETRICA - PROGRAMA DE ANALISE DE REDES - V08MAR05A                                PAG. 168

ANUAL 06/07 * SETEMBRO 2006 PESADA S/SE 19H N/NE 19H * ANAT0 - FSE - C13
RELATORIO COMPLETO DO SISTEMA * AREA  7 * *             CPFL                *
```

```
X----------------- D A D O S  -  B A R R A -------------------------X------------ F L U X O S  -  C I R C U I T O S ------------X
 DA BARRA      TENSAO GERACAO INJ EQV  CARGA   ELO CC  SHUNT    MOTOR
 NUM. KV TIPO   MOD/     MW/     MW/     MW/     MW/   Mvar/     MW/
     NOME       ANG     Mvar    Mvar    Mvar    Mvar   EQUIV    Mvar  PARA BARRA                    FLUXOS
                                                FLUXO % SHUNT L         NUM.     NOME     NC     MW    Mvar  MVA/V_d   TAP  DEFAS TIE
X------------X-------X-------X-------X-------X-------X-------X-------X----X------------X--X-------X-------X-------X------X-----X---X

 4226    1  0   0.984     0.0     0.0     0.0     0.0     0.0     0.0
 Pontal         -92.5     0.0     0.0     0.0     0.0     0.0     0.0
                                                19.7%                   2266 HUMA+PTAL138  1    20.0     0.1    20.3
                                                19.7%                   4225 Us.Sta Elisa  1   -20.0    -0.1    20.3
 4227    1  0   0.982     0.0     0.0     0.0     0.0     0.0     0.0
 Tie S.Ant.     -92.9     0.0     0.0     0.0     0.0     0.0     0.0
                                                18.2%                   2268 IGUAPE---138  1   -13.3   -12.8    18.8
                                                28.1%                   2290 SERTAOZIN138  1    25.3    12.9    28.9
                                                11.9%                   4228 Us. S.Anton   1   -12.0    -0.1    12.2
 4228    1  0   0.983    12.0     0.0     0.0     0.0     0.0     0.0
 Us. S.Anton    -92.9     0.0     0.0     0.0     0.0     0.0     0.0
                                                11.9%                   4227 Tie S.Ant.    1    12.0     0.0    12.2
 4229    1  0   0.991    40.0     0.0     0.0     0.0     0.0     0.0
 Us.V.Rosario   -88.4     0.0     0.0     0.0     0.0     0.0     0.0
                                                46.9%                   2255 ANHA+MAGU138  1    40.0     0.0    40.3


TOTAIS DA AREA  7


X--------X--------X--------X--------X--------X--------X--------X--------X
  GERACAO  INJ EQV   CARGA   ELO CC    SHUNT   EXPORT   IMPORT   PERDAS
    MW/      MW/      MW/      MW/     Mvar/     MW/      MW/      MW/
   Mvar     Mvar     Mvar     Mvar     EQUIV    Mvar     Mvar     Mvar
X--------X--------X--------X--------X--------X--------X--------X--------X

    255.0      0.0   4109.7      0.0    260.7    107.6   4035.2     72.9
      2.0      0.0   1528.4      0.0      0.0     73.3   1296.7    -42.4
```





```
X----------------- D A D O S  -  B A R R A -------------------------X------------ F L U X O S  -  C I R C U I T O S ------------X
 DA BARRA      TENSAO GERACAO INJ EQV  CARGA   ELO CC  SHUNT    MOTOR
 NUM. KV TIPO   MOD/     MW/     MW/     MW/     MW/   Mvar/     MW/
     NOME       ANG     Mvar    Mvar    Mvar    Mvar   EQUIV    Mvar  PARA BARRA                    FLUXOS
                                                FLUXO % SHUNT L         NUM.     NOME     NC     MW    Mvar  MVA/V_d   TAP  DEFAS TIE
X------------X-------X-------X-------X-------X-------X-------X-------X----X------------X--X-------X-------X-------X------X-----X---X

  501    1  2   1.020  2930.8     0.0     0.0     0.0     0.0     0.0
 I.SOLTE-18GR   -54.4  -371.6     0.0     0.0     0.0     0.0     0.0
                                                85.2%                    538 ISOLTEIR-440  1  2930.8  -371.6  2896.3              05
  502    1  1   1.000  1028.0     0.0     0.0     0.0     0.0     0.0
 JUPIA---10GR   -54.2  -333.2     0.0     0.0     0.0     0.0     0.0
                                                80.4%                    539 JUPIA----440  1  1028.0  -333.2  1080.7              05
  503    1  1   1.010   171.0     0.0     0.0     0.0     0.0     0.0
 JUPIA138-2GR   -58.1    -1.8     0.0     0.0     0.0     0.0     0.0
                                                75.6%                    541 JUPIA----138  1   171.0    -1.8   169.3              05
  510    1  1   1.040  1232.0     0.0     0.0     0.0     0.0     0.0
 P.PRIMA-13GR   -43.2    -2.0     0.0     0.0     0.0     0.0     0.0
                                                65.3%                    544 PPRIMAV--440  1  1232.0    -2.0  1184.6              05
```

```
  520    1  1   1.040   646.0     0.0     0.0     0.0     0.0     0.0
 T.IRMAOS-4GR   -53.3    36.8     0.0     0.0     0.0     0.0     0.0
                                                 74.1%                  542 3IRMAOS--440  1   646.0    36.8   622.2              05
  525    1  1   1.030    22.0     0.0     0.0     0.0     0.0     0.0
 JAGUARI--2GR   -99.9    11.9     0.0     0.0     0.0     0.0     0.0
                                                 71.4%                  720 JAGUARI---88  1    22.0    11.9    24.3              06
  526    1  1   1.010    47.0     0.0     0.0     0.0     0.0     0.0
 PARAIBUN-2GR   -99.6    18.4     0.0     0.0     0.0     0.0     0.0
                                                 50.0%                  724 PARAIBUNA-88  1    47.0    18.4    50.0              06
  606  230  0   0.986     0.0     0.0   154.0     0.0     0.0     0.0
 CBA------230   -97.9     0.0     0.0    65.6     0.0     0.0     0.0
                                                 56.6%                  590 CABREUVA-230  1  -306.0  -100.7   326.7              05
                                                 56.6%                  590 CABREUVA-230  2  -306.0  -100.7   326.7              05
                                                  4.8%                  607 CBA-2----230  1   458.0   135.8   484.5              41


TOTAIS DA AREA  8


X--------X--------X--------X--------X--------X--------X--------X--------X
  GERACAO  INJ EQV   CARGA   ELO CC    SHUNT   EXPORT   IMPORT   PERDAS
    MW/      MW/      MW/      MW/     Mvar/     MW/      MW/      MW/
   Mvar     Mvar     Mvar     Mvar     EQUIV    Mvar     Mvar     Mvar
X--------X--------X--------X--------X--------X--------X--------X--------X

   6076.8      0.0    154.0      0.0      0.0   6534.8    612.0      0.0
   -641.6      0.0     65.6      0.0      0.0    202.9    910.1      0.0
CEPEL - CENTRO DE PESQUISAS DE ENERGIA ELETRICA - PROGRAMA DE ANALISE DE REDES - V08MAR05A                                PAG. 170

ANUAL 06/07 * SETEMBRO 2006 PESADA S/SE 19H N/NE 19H * ANAT0 - FSE - C13
RELATORIO COMPLETO DO SISTEMA * AREA  9 * *              LIGHT               *

X----------------- D A D O S  -  B A R R A -------------------------X------------- F L U X O S  -  C I R C U I T O S -------------X
 DA BARRA      TENSAO GERACAO INJ EQV  CARGA   ELO CC  SHUNT    MOTOR
 NUM. KV TIPO   MOD/     MW/     MW/     MW/     MW/   Mvar/     MW/
     NOME       ANG     Mvar    Mvar    Mvar    Mvar   EQUIV    Mvar  PARA BARRA                    FLUXOS
                                                FLUXO % SHUNT L         NUM.     NOME     NC     MW    Mvar  MVA/V_d   TAP  DEFAS TIE
X------------X-------X-------X-------X-------X-------X-------X-------X----X------------X--X-------X-------X-------X------X-----X---X

  250    1  1   0.995   309.0     0.0     0.0     0.0     0.0     0.0
 NPECANHA-6GR  -105.8   141.7     0.0     0.0     0.0     0.0     0.0
                                                  3.4%                  251 N.PECANH-138  1   309.0   141.7   341.7
  251    1  0   1.001     0.0     0.0     0.0     0.0     0.0     0.0
 N.PECANH-138  -112.2     0.0     0.0     0.0     0.0     0.0     0.0
                                                  3.3%                  250 NPECANHA-6GR  1  -309.0  -101.9   325.1 1.051F
                                                 26.8%                  252 N.PECANH-230  1   -48.2    23.6    53.6
                                                 10.9%                  254 FONTES---138  1    21.7   -30.5    37.4
                                                 10.8%                  254 FONTES---138  2    24.1   -28.3    37.1
                                                 27.2%                  262 VIGARIO--138  1    27.9     6.2    28.6
                                                 27.2%                  262 VIGARIO--138  2    27.9     6.2    28.6
                                                 27.2%                  262 VIGARIO--138  3    27.9     6.2    28.6
                                                 17.1%                  266 S.CLARA--138  1    28.2    -8.3    29.4
                                                 21.5%                  274 V.REDOND-138  1    23.8    28.3    37.0
                                                 21.5%                  274 V.REDOND-138  2    23.8    28.3    37.0
                                                 17.7%                  274 V.REDOND-138  3    22.7    31.2    38.5
                                                 17.7%                  274 V.REDOND-138  4    22.7    31.2    38.5
                                                 15.8%                  280 A.BRANCA-TAP  1    25.9    -8.3    27.2
                                                 29.5%                 1613 TAP.PIRAY     1    30.4     5.6    30.9
                                                 38.1%                 1627 QUEIMADOS138  1    50.0    10.5    51.1
```

```
 252    1  0   1.030     0.0     0.0     0.0     0.0     0.0     0.0
N.PECANH-230  -110.2     0.0     0.0     0.0     0.0     0.0     0.0
                                              25.7%                  251 N.PECANH-138  1    48.2   -21.6    51.3 1.045*
                                              17.6%                  461 S.CABECA-230  1   -48.2    21.6    51.3                04
 253    1  1   0.995   120.0     0.0     0.0     0.0     0.0     0.0
FONTES---3GR  -105.8    54.6     0.0     0.0     0.0     0.0     0.0
                                               1.3%                  254 FONTES---138  1   120.0    54.6   132.5
 254    1  0   1.001     0.0     0.0     0.0     0.0     0.0     0.0
FONTES---138  -112.2     0.0     0.0     0.0     0.0     0.0     0.0
                                              10.9%                  251 N.PECANH-138  1   -21.7    30.4    37.4
                                              10.6%                  251 N.PECANH-138  2   -24.1    27.6    36.6
                                               1.3%                  253 FONTES---3GR  1  -120.0   -39.0   126.1 1.051F
                                               8.5%                  256 P.PASSOS-138  1     5.9   -13.5    14.7
                                              35.9%                  295 SEROPEDI-138  1    61.9     0.7    61.8
                                              28.5%                 3975 ELETROB--138  1    49.0    -3.1    49.1                41
                                              28.5%                 3975 ELETROB--138  3    49.0    -3.1    49.1                41
 255    1  1   0.995    50.0     0.0     0.0     0.0     0.0     0.0
P.PASSOS-1GR  -104.8    19.9     0.0     0.0     0.0     0.0     0.0
                                               0.5%                  256 P.PASSOS-138  1    50.0    19.9    54.1
CEPEL - CENTRO DE PESQUISAS DE ENERGIA ELETRICA - PROGRAMA DE ANALISE DE REDES - V08MAR05A                                PAG. 171

ANUAL 06/07 * SETEMBRO 2006 PESADA S/SE 19H N/NE 19H * ANAT0 - FSE - C13
RELATORIO COMPLETO DO SISTEMA * AREA  9 * *              LIGHT               *

X----------------- D A D O S  -  B A R R A ------------------------X------------ F L U X O S  -  C I R C U I T O S ------------X
 DA BARRA      TENSAO GERACAO INJ EQV  CARGA   ELO CC  SHUNT    MOTOR
 NUM. KV TIPO   MOD/     MW/     MW/     MW/     MW/   Mvar/     MW/
     NOME       ANG     Mvar    Mvar    Mvar    Mvar   EQUIV    Mvar  PARA BARRA                    FLUXOS
                                                FLUXO % SHUNT L         NUM.     NOME     NC     MW    Mvar  MVA/V_d   TAP  DEFAS TIE
X------------X-------X-------X-------X-------X-------X-------X-------X----X------------X--X-------X-------X-------X------X-----X---X

 256    1  0   1.002     0.0     0.0     0.0     0.0     0.0     0.0
P.PASSOS-138  -112.3     0.0     0.0     0.0     0.0     0.0     0.0
                                               8.4%                  254 FONTES---138  1    -5.9    13.2    14.4
                                               0.5%                  255 P.PASSOS-1GR  1   -50.0   -12.7    51.5 1.051F
                                              32.4%                 3975 ELETROB--138  1    55.9    -0.5    55.8                41
 257    1  1   0.975   140.0     0.0     0.0     0.0     0.0     0.0
I.POMBOS-5GR  -113.6    17.6     0.0     0.0     0.0     0.0     0.0
                                               1.4%                  258 I.POMBOS-138  1   140.0    17.6   144.7
 258    1  0   1.018     0.0     0.0     6.1     0.0     0.0     0.0
I.POMBOS-138  -117.9     0.0     0.0     1.8     0.0     0.0     0.0
                                               1.4%                  257 I.POMBOS-5GR  1  -140.0    -7.2   137.7 1.051F
                                               7.0%                 1601 SAPUCAIA-138  1   -19.3     7.1    20.2
                                               4.3%                 1755 RDC-ENTR.138  1    11.8     4.2    12.3                10
                                              58.5%                 1757 PALMAS   138  1    71.6    -8.7    70.8                10
                                              57.4%                 1758 PALMAS-----2  1    70.0    -9.6    69.4                10
                                               9.2%                 3300 APARAIBA-138  1    -0.1     6.2     6.1                18
                                               9.2%                 3300 APARAIBA-138  2    -0.1     6.2     6.1                18
 259    1 -1   1.043     0.0     0.0    24.0     0.0     0.0     0.0
SCECILIA BOM  -117.9     0.0     0.0     0.0     0.0     0.0     0.0
                                               0.2%                  260 S.CECILI-138  1   -24.0     0.0    23.0
 260    1  0   0.985     0.0     0.0    33.1     0.0     0.0     0.0
S.CECILI-138  -113.4     0.0     0.0     6.0     0.0     0.0     0.0
                                               0.2%                  259 SCECILIA BOM  1    24.0     1.9    24.4 0.942F
                                              35.6%                  262 VIGARIO--138  1   -36.1    -7.3    37.4
                                              35.6%                  262 VIGARIO--138  2   -36.1    -7.3    37.3
                                              11.6%                 1614 TAP.THYSSEN   1   -11.9    -1.7    12.2
                                              16.7%                 1654 CENTENARI138  1    26.9     8.4    28.6
 261    1 -1   1.058     0.0     0.0     0.0     0.0     0.0     0.0
VIGARIO BOMB  -112.5     0.0     0.0     0.0     0.0     0.0     0.0
```

```
                                                 0.0%                  262 VIGARIO--138  1     0.0     0.0     0.0
  262    1  0   0.997     0.0     0.0    10.7     0.0     0.0     0.0
 VIGARIO--138  -112.5     0.0     0.0     5.9     0.0     0.0     0.0
                                                27.3%                  251 N.PECANH-138  1   -27.8    -6.5    28.7
                                                27.3%                  251 N.PECANH-138  2   -27.8    -6.5    28.7
                                                27.3%                  251 N.PECANH-138  3   -27.8    -6.5    28.7
                                                35.4%                  260 S.CECILI-138  1    36.4     6.9    37.1
                                                35.4%                  260 S.CECILI-138  2    36.4     6.9    37.1
                                                 0.0%                  261 VIGARIO BOMB  1     0.0     0.0     0.0 0.942F
  263    1  0   1.008     0.0     0.0    38.2     0.0     0.0     0.0
 TAQUARA--138  -114.2     0.0     0.0    11.3     0.0     0.0     0.0
                                                18.1%                  180 JACAREP--138  1   -38.2   -11.3    39.5              01
CEPEL - CENTRO DE PESQUISAS DE ENERGIA ELETRICA - PROGRAMA DE ANALISE DE REDES - V08MAR05A                                PAG. 172

ANUAL 06/07 * SETEMBRO 2006 PESADA S/SE 19H N/NE 19H * ANAT0 - FSE - C13
RELATORIO COMPLETO DO SISTEMA * AREA  9 * *              LIGHT              *

X----------------- D A D O S  -  B A R R A -------------------------X------------ F L U X O S  -  C I R C U I T O S ------------X
 DA BARRA      TENSAO GERACAO INJ EQV  CARGA   ELO CC  SHUNT    MOTOR
 NUM. KV TIPO   MOD/     MW/     MW/     MW/     MW/   Mvar/     MW/
     NOME       ANG     Mvar    Mvar    Mvar    Mvar   EQUIV    Mvar  PARA BARRA                    FLUXOS
                                                FLUXO % SHUNT L        NUM.     NOME     NC     MW    Mvar  MVA/V_d   TAP  DEFAS TIE
X------------X-------X-------X-------X-------X-------X-------X-------X----X------------X--X-------X-------X-------X------X-----X---X

  264    1  0   1.010     0.0     0.0     0.0     0.0     0.0     0.0
  Tap-INMETRO  -115.2     0.0     0.0     0.0     0.0     0.0     0.0
                                                57.0%                  169 S.JOSE---138  1  -164.9   -10.1   163.5              01
                                                14.7%                 1668 INMETRO--138  1    15.3     3.0    15.4
                                                51.6%                 1755 RDC-ENTR.138  1   149.6     7.1   148.2              10
  265    1  0   1.020     0.0     0.0     5.0     0.0     0.0     0.0
 VULCAN---138  -113.2     0.0     0.0     1.5     0.0     0.0     0.0
                                                27.6%                 1618 COLEGIO--138  1    58.4    18.8    60.2
                                                30.0%                 1693 VIG.GERAL138  1   -63.4   -20.3    65.3
  266  230  0   1.001     0.0     0.0    26.4     0.0     0.0     0.0
 S.CLARA--138  -113.5     0.0     0.0    10.7     0.0     0.0     0.0
                                                16.8%                  251 N.PECANH-138  1   -28.0     6.9    28.8
                                                10.3%                 1633 GUADALUP-138  1     1.6   -17.6    17.7
  267    1  0   1.021     0.0     0.0     2.5     0.0     0.0     0.0
 CPP---138     -112.6     0.0     0.0     0.5     0.0     0.0     0.0
                                                 3.2%                  268  Tap-CIFERAL  1    -3.3    -0.9     3.3
                                                 0.8%                 1603 CIFERAL--138  1     0.8     0.4     0.9
  268    1  0   1.021     0.0     0.0     0.0     0.0     0.0     0.0
  Tap-CIFERAL  -112.6     0.0     0.0     0.0     0.0     0.0     0.0
                                                 3.1%                  267 CPP---138     1     3.3     0.7     3.3
                                                17.4%                 1602 T.RIOS---138  1    51.1    -1.2    50.0
                                                18.5%                 1606 ELDORADO-138  1   -54.4     0.5    53.2
  270    1  0   1.027     0.0     0.0     0.0     0.0     0.0     0.0
 CORDOVIL-138  -112.4     0.0     0.0     0.0     0.0     0.0     0.0
                                                36.9%                 1600 W.LUIS---138  1  -203.5    13.2   198.6
                                                76.4%                 1608 A.GRANDE-138  1   164.6    46.7   166.6
                                                64.6%                 1692 B.DE PINA138  1    57.7   -32.7    64.6
                                                64.6%                 1692 B.DE PINA138  2    57.7   -32.7    64.6
                                                35.6%                 1692 B.DE PINA138  3    60.0   -28.8    64.8
                                                47.2%                 1693 VIG.GERAL138  1   101.5    29.3   102.9
                                                43.1%                 4200 S.JOSE2--138  1  -238.0     5.0   231.9              01
  271    1  0   1.028     0.0     0.0    36.6     0.0     0.0     0.0
 MERITI---138  -111.7     0.0     0.0    -4.5     0.0     0.0     0.0
                                                45.4%                  169 S.JOSE---138  1  -151.1    -2.7   147.0              01
                                                51.2%                  272 TRIAGEM--138  1   114.5     7.2   111.6
CEPEL - CENTRO DE PESQUISAS DE ENERGIA ELETRICA - PROGRAMA DE ANALISE DE REDES - V08MAR05A                                PAG. 173
```

```
ANUAL 06/07 * SETEMBRO 2006 PESADA S/SE 19H N/NE 19H * ANAT0 - FSE - C13
RELATORIO COMPLETO DO SISTEMA * AREA  9 * *              LIGHT              *

X----------------- D A D O S  -  B A R R A -------------------------X------------ F L U X O S  -  C I R C U I T O S ------------X
 DA BARRA      TENSAO GERACAO INJ EQV  CARGA   ELO CC  SHUNT    MOTOR
 NUM. KV TIPO   MOD/     MW/     MW/     MW/     MW/   Mvar/     MW/
     NOME       ANG     Mvar    Mvar    Mvar    Mvar   EQUIV    Mvar  PARA BARRA                    FLUXOS
                                                FLUXO % SHUNT L        NUM.     NOME     NC     MW    Mvar  MVA/V_d   TAP  DEFAS TIE
X------------X-------X-------X-------X-------X-------X-------X-------X----X------------X--X-------X-------X-------X------X-----X---X

  272    1  0   1.020     0.0     0.0    75.6     0.0     0.0     0.0
 TRIAGEM--138  -113.8     0.0     0.0     6.6     0.0     0.0     0.0
                                              51.2%                 271 MERITI---138  1  -113.8    -3.9   111.7
                                              43.4%                1605 CAXIAS---138  1   -96.4     2.3    94.6
                                              13.7%                1612 DEMOCRAT-138  1    26.8    14.6    30.0
                                              20.1%                1616 C.MARTE--138  1    38.6   -18.8    42.1
                                              19.7%                1617 TROVAO---138  1    38.0   -18.3    41.3
                                              16.1%                1669 CACHAMBI-138  1    31.1    17.5    35.0
  273    1  0   0.971     0.0     0.0     9.9     0.0     0.0     0.0
 SAUDADE--138  -112.5     0.0     0.0     4.7     0.0     0.0     0.0
                                              49.9%                 191 FUNIL--2-138  1   -69.1    -4.3    71.3               01
                                              32.7%                1621 FONTINEL-138  1    54.4    -4.8    56.2
                                              24.1%                1666 DUPONT---TAP  1   -40.1     4.1    41.5
                                              26.9%                1676 S BARRA MANS  1    45.0     0.4    46.3
  274    1  0   0.975     0.0     0.0    55.8     0.0   128.2     0.0
 V.REDOND-138  -112.9     0.0     0.0    15.7     0.0     0.0     0.0
                                              41.4%                 182 FUNIL----138  1   -58.8    -2.9    60.4               01
                                              67.8%                 183 C.PAULIS-138  1   -96.4     3.9    99.0               01
                                              22.4%                 251 N.PECANH-138  1   -23.6   -29.2    38.5
                                              22.4%                 251 N.PECANH-138  2   -23.6   -29.2    38.5
                                              18.4%                 251 N.PECANH-138  3   -22.5   -32.1    40.2
                                              18.4%                 251 N.PECANH-138  4   -22.5   -32.1    40.2
                                              15.0%                 281 RETIRO---138  1    15.2    20.0    25.8
                                              32.6%                1673 C.S.N.---138  1    47.2    50.7    71.1
                                              26.4%                1673 C.S.N.---138  2    47.2    50.7    71.1
                                              26.4%                1673 C.S.N.---138  3    47.2    50.7    71.1
                                              31.6%                1673 C.S.N.---138  4    47.6    47.3    68.8
                                              11.5%                1699 TUPY-----138  1   -12.7    14.6    19.8
  275    1  0   1.017     0.0     0.0    87.6     0.0     0.0     0.0
 CASCADURA--2  -113.3     0.0     0.0    14.0     0.0     0.0     0.0
                                              35.9%                 280 A.BRANCA-TAP  1    50.5    37.3    61.8
                                              53.6%                 291 P.METRO1-138  1  -117.9   -14.6   116.8
                                              16.1%                 292 P.METRO2-138  1   -31.7   -16.7    35.2
                                              20.7%                1609 RAMOS----138  1    56.4    -5.2    55.7
                                              20.6%                1611 T.NOVA---138  1    44.4   -10.9    45.0
                                              11.7%                1618 COLEGIO--138  1   -19.1   -17.6    25.6
                                              33.4%                1634 PANAMERICANA  1    51.2    28.1    57.4
                                              55.1%                4200 S.JOSE2--138  1  -121.4   -14.4   120.1               01
  276    1  0   1.011     0.0     0.0    27.1     0.0     0.0     0.0
 BRISAMAR-138  -113.9     0.0     0.0     5.8     0.0     0.0     0.0
                                              36.1%                 184 S.CRUZ---138  1    34.8    -6.2    35.0               01
                                              49.0%                 184 S.CRUZ---138  2    45.9   -14.0    47.5               01
                                              44.4%                1770 MURIQUI  138  1   -41.9    12.1    43.1               10
                                              55.4%                1771 JACUACANG138  1   -66.0     2.3    65.4               10
CEPEL - CENTRO DE PESQUISAS DE ENERGIA ELETRICA - PROGRAMA DE ANALISE DE REDES - V08MAR05A                                PAG. 174

ANUAL 06/07 * SETEMBRO 2006 PESADA S/SE 19H N/NE 19H * ANAT0 - FSE - C13
RELATORIO COMPLETO DO SISTEMA * AREA  9 * *              LIGHT              *
```

```
X----------------- D A D O S  -  B A R R A -------------------------X------------ F L U X O S  -  C I R C U I T O S ------------X
 DA BARRA      TENSAO GERACAO INJ EQV  CARGA   ELO CC  SHUNT    MOTOR
 NUM. KV TIPO   MOD/     MW/     MW/     MW/     MW/   Mvar/     MW/
     NOME       ANG     Mvar    Mvar    Mvar    Mvar   EQUIV    Mvar  PARA BARRA                    FLUXOS
                                                FLUXO % SHUNT L        NUM.     NOME     NC     MW    Mvar  MVA/V_d   TAP  DEFAS TIE
X------------X-------X-------X-------X-------X-------X-------X-------X----X------------X--X-------X-------X-------X------X-----X---X

  277    1  0   1.010     0.0     0.0   110.5     0.0    68.8     0.0
 ZIN------138  -115.4     0.0     0.0    22.3     0.0     0.0     0.0
                                              16.4%                  180 JACAREP--138  1   -31.9     3.9    31.9               01
                                              36.8%                  184 S.CRUZ---138  1   -53.9     5.3    53.7               01
                                               6.4%                 3988 ZIN1--TAP138  1    -0.4    24.0    23.7
                                               7.4%                 3989 ZIN2--TAP138  1   -24.2    13.4    27.4
  278    1  0   1.018     0.0     0.0   128.0     0.0   139.8     0.0
 PALMARES-138  -115.7     0.0     0.0    48.6     0.0     0.0     0.0
                                              23.8%                   98 JACARE-2-138  1   -43.5    17.7    46.1               01
                                              13.4%                  184 S.CRUZ---138  1   -43.3    25.8    49.6               01
                                              13.4%                  184 S.CRUZ---138  2   -43.3    25.8    49.5               01
                                              14.8%                 1639 M.ALTO---138  1     2.1    21.9    21.6
  279    1  0   1.004     0.0     0.0     7.3     0.0     0.0     0.0
 BRAHMA---138  -115.7     0.0     0.0     0.0     0.0     0.0     0.0
                                               4.8%                 1637 ESPERANC-138  1    -7.3     0.0     7.3
  280    1  0   1.002     0.0     0.0     0.0     0.0     0.0     0.0
 A.BRANCA-TAP  -114.1     0.0     0.0     0.0     0.0     0.0     0.0
                                              15.3%                  251 N.PECANH-138  1   -25.7     5.9    26.3
                                              36.2%                  275 CASCADURA--2  1   -50.3   -37.0    62.3
                                              47.6%                 1696 A.BRANCA-138  1    76.0    31.1    81.9
  281    1  0   0.970     0.0     0.0    38.8     0.0     0.0     0.0
 RETIRO---138  -113.0     0.0     0.0     9.4     0.0     0.0     0.0
                                              15.2%                  274 V.REDOND-138  1   -15.1   -20.3    26.1
                                              15.6%                 1621 FONTINEL-138  1   -23.7    10.9    26.9
  282    1  0   1.008     0.0     0.0     0.0     0.0     0.0     0.0
 RECREIO--138  -114.6     0.0     0.0     0.0     0.0     0.0     0.0
                                              27.3%                  180 JACAREP--138  1   -73.9    -5.1    73.5               01
                                              27.3%                 1635 ALVORADA-138  1    73.9     5.1    73.5
  283    1  0   1.030     0.0     0.0     0.0     0.0     0.0     0.0
 T.SUL----138  -112.4     0.0     0.0     0.0     0.0     0.0     0.0
                                              44.6%                  178 GRAJAU---138  1   -98.5    18.7    97.3               01
                                              44.6%                  178 GRAJAU---138  2   -98.5    18.7    97.3               01
                                              44.6%                  178 GRAJAU---138  3   -98.5    18.7    97.3               01
                                              44.6%                  178 GRAJAU---138  4   -98.5    18.7    97.3               01
                                              45.7%                 1644 PDAGUA-A      1    97.8    31.1    99.7
                                              42.7%                 1648 S.CONRAD-138  1    91.9    26.9    93.0
                                              20.1%                 1656 M.VAZ-1--138  1    43.6   -11.5    43.7
                                              19.7%                 1657 M.VAZ-2--138  1    42.7   -11.9    43.0
                                              35.5%                 1659 P.SEIS---138  1    43.0   -39.7    56.8
                                              18.3%                 1661 HUMAITA--138  1    13.3   -14.1    18.8
                                              18.3%                 1661 HUMAITA--138  2    13.3   -14.1    18.8
                                              38.7%                 1662 COPACABAN138  1    48.4   -41.6    61.9
```



ANUAL 06/07 * SETEMBRO 2006 PESADA S/SE 19H N/NE 19H * ANAT0 - FSE - C13
RELATORIO COMPLETO DO SISTEMA * AREA 9 * * LIGHT *

X----------------- D A D O S  -  B A R R A -------------------------X------------ F L U X O S  -  C I R C U I T O S ------------X
 DA BARRA      TENSAO GERACAO INJ EQV  CARGA   ELO CC  SHUNT    MOTOR
 NUM. KV TIPO   MOD/     MW/     MW/     MW/     MW/   Mvar/     MW/
     NOME       ANG     Mvar    Mvar    Mvar    Mvar   EQUIV    Mvar  PARA BARRA                    FLUXOS
                                                FLUXO % SHUNT L        NUM.     NOME     NC     MW    Mvar  MVA/V_d   TAP  DEFAS TIE
X------------X-------X-------X-------X-------X-------X-------X-------X----X------------X--X-------X-------X-------X------X-----X---X

```
 284    1  0   1.033     0.0     0.0    91.0     0.0     0.0     0.0
F.CANECA-138  -112.2     0.0     0.0    -3.2     0.0     0.0     0.0
                                              25.4%                 290 SAMARITANO    1    47.5   -28.0    53.4
                                               4.3%                1628 CAMERINO-138  1     8.8    -6.1    10.3
                                              25.8%                1649 LEOPOLDO-138  1   -52.8    24.4    56.3
                                              16.2%                1650 R.COMPRI-138  1   -26.5    24.9    35.2
                                              28.6%                1651 J.BOTA-A-138  1   -59.2    25.4    62.3
                                              28.6%                1652 J.BOTA-B-138  1   -59.2    25.4    62.3
                                              25.6%                1653 URUGUAI--138  1   -50.0    28.9    55.9
                                              26.4%                1655 ACAMPISTA138  1   -54.3    24.2    57.6
                                               7.5%                1684 S.ANTONIO138  1    10.4    -9.1    13.3
                                              11.7%                1684 S.ANTONIO138  2    14.6   -15.6    20.7
                                               8.7%                1684 S.ANTONIO138  3    14.6   -15.6    20.7
                                              23.5%                1685 MACKENZIE138  1    48.7   -31.5    56.2
                                              26.2%                1686 BAEPENDI-138  2    60.2   -28.5    64.5
                                              16.4%                1689 METRO BOTA-2  1     6.1   -15.6    16.2
 285    1  0   0.992     0.0     0.0    55.0     0.0     0.0     0.0
C.SOARES-138  -114.8     0.0     0.0    24.8     0.0     0.0     0.0
                                              25.9%                1607 C.ROCHA--TAP  1   -35.3   -26.5    44.5
                                              11.6%                1623 TAPGUANDU--2  1   -19.7     1.7    20.0
 286    1  0   1.000     0.0     0.0    27.0     0.0     0.0     0.0
R.FREIRE-138  -114.1     0.0     0.0    -3.8     0.0     0.0     0.0
                                              14.5%                1636 TURIACU--138  1   -20.5   -14.1    24.9
                                              11.1%                3975 ELETROB--138  1    -6.5    17.9    19.0                41
 287    1  0   1.025     0.0     0.0    37.3     0.0     0.0     0.0
SARAPUI--138  -111.6     0.0     0.0    18.1     0.0     0.0     0.0
                                              36.0%                1604 V.TELES--138  1  -103.2   -24.0   103.4
                                              22.5%                1606 ELDORADO-138  1    65.9     5.9    64.6
 288    1  0   1.023     0.0     0.0    76.2     0.0     0.0     0.0
ROSALI---138  -112.9     0.0     0.0    13.7     0.0     0.0     0.0
                                              17.3%                 292 P.METRO2-138  1    34.9    16.6    37.7
                                              51.6%                1608 A.GRANDE-138  1  -111.1   -30.3   112.6
 289    1  0   0.999     0.0     0.0    67.2     0.0     0.0     0.0
CAMARA---138  -115.1     0.0     0.0    21.4     0.0     0.0     0.0
                                              96.7%                  98 JACARE-2-138  1  -110.6   -27.6   114.1                01
                                              37.2%                1625 JABOATAO-138  1    43.4     6.2    43.9
 290    1  0   1.034     0.0     0.0    29.2     0.0     0.0     0.0
SAMARITANO    -112.4     0.0     0.0    12.5     0.0     0.0     0.0
                                              22.1%                 284 F.CANECA-138  1   -47.5     6.9    46.5
                                               5.6%                1686 BAEPENDI-138  1   -12.1     0.7    11.7
                                              21.8%                1691 BOTAFOGO-138  1    15.2   -10.1    17.7
                                              21.8%                1691 BOTAFOGO-138  2    15.2   -10.1    17.7
CEPEL - CENTRO DE PESQUISAS DE ENERGIA ELETRICA - PROGRAMA DE ANALISE DE REDES - V08MAR05A                                PAG. 176

ANUAL 06/07 * SETEMBRO 2006 PESADA S/SE 19H N/NE 19H * ANAT0 - FSE - C13
RELATORIO COMPLETO DO SISTEMA * AREA  9 * *              LIGHT              *

X----------------- D A D O S  -  B A R R A -------------------------X------------ F L U X O S  -  C I R C U I T O S ------------X
 DA BARRA      TENSAO GERACAO INJ EQV  CARGA   ELO CC  SHUNT    MOTOR
 NUM. KV TIPO   MOD/     MW/     MW/     MW/     MW/   Mvar/     MW/
     NOME       ANG     Mvar    Mvar    Mvar    Mvar   EQUIV    Mvar  PARA BARRA                    FLUXOS
                                                FLUXO % SHUNT L         NUM.     NOME     NC     MW    Mvar  MVA/V_d   TAP  DEFAS TIE
X------------X-------X-------X-------X-------X-------X-------X-------X----X------------X--X-------X-------X-------X------X-----X---X

 291    1  0   1.022     0.0     0.0     3.1     0.0     0.0     0.0
P.METRO1-138  -112.5     0.0     0.0     0.3     0.0     0.0     0.0
                                              53.6%                 275 CASCADURA--2  1   118.2    15.9   116.8
                                              55.0%                1615 FICAP----138  1  -121.3   -16.2   119.8
 292    1  0   1.020     0.0     0.0     3.1     0.0     0.0     0.0
```

```
 P.METRO2-138  -113.1     0.0     0.0     0.3     0.0     0.0     0.0
                                                16.1%                 275 CASCADURA--2  1    31.7    16.4    35.0
                                                17.4%                 288 ROSALI---138  1   -34.8   -16.7    37.9
  293    1  0   1.010     0.0     0.0    36.8     0.0     0.0     0.0
 CACHAMORRA    -115.6     0.0     0.0    12.7     0.0     0.0     0.0
                                                24.3%                  98 JACARE-2-138  1   -47.1     6.7    47.1                01
                                                14.9%                1639 M.ALTO---138  1    10.3   -19.4    21.7
  294    1  0   0.975     0.0     0.0    35.7     0.0     0.0     0.0
 SANTISSI-138  -116.4     0.0     0.0     9.6     0.0     0.0     0.0
                                                22.1%                1624 GUANDU---138  1   -35.7    -9.6    37.9
  295    1  0   0.995     0.0     0.0    38.5     0.0     0.0     0.0
 SEROPEDI-138  -113.6     0.0     0.0    10.3     0.0     0.0     0.0
                                                35.9%                 254 FONTES---138  1   -61.5    -0.2    61.8
                                                14.7%                3975 ELETROB--138  1    23.0   -10.1    25.2                41
  296    1  1   1.000    35.0     0.0     0.0     0.0     0.0     0.0
 S.BRANCA-2MQ   -97.7     1.8     0.0     0.0     0.0     0.0     0.0
                                                 0.4%                 297 SBRANCA---88  1    35.0     1.8    35.0
  297    1  0   1.000     0.0     0.0     0.0     0.0     0.0     0.0
 SBRANCA---88  -103.1     0.0     0.0     0.0     0.0     0.0     0.0
                                                 0.4%                 296 S.BRANCA-2MQ  1   -35.0     1.5    35.0
                                                 0.2%                 455 SAO JOSE-088  1    17.5    -0.7    17.5                04
                                                 0.2%                 455 SAO JOSE-088  2    17.5    -0.7    17.5                04
 1600    1  0   1.027     0.0     0.0    54.6     0.0     0.0     0.0
 W.LUIS---138  -112.0     0.0     0.0    13.7     0.0     0.0     0.0
                                                36.9%                 270 CORDOVIL-138  1   203.7   -12.1   198.7
                                                46.7%                4200 S.JOSE2--138  1  -258.3    -1.6   251.5                01
 1601    1  0   1.014     0.0     0.0     3.3     0.0     0.0     0.0
 SAPUCAIA-138  -116.8     0.0     0.0     3.7     0.0     0.0     0.0
                                                 7.4%                 258 I.POMBOS-138  1    19.4    -9.3    21.2
                                                 8.0%                1602 T.RIOS---138  1   -22.7     5.6    23.0
 1602    1  0   1.012     0.0     0.0    27.8     0.0     0.0     0.0
 T.RIOS---138  -115.9     0.0     0.0     6.6     0.0     0.0     0.0
                                                17.4%                 268  Tap-CIFERAL  1   -50.5     0.6    49.9
                                                 8.2%                1601 SAPUCAIA-138  1    22.7    -7.2    23.6
CEPEL - CENTRO DE PESQUISAS DE ENERGIA ELETRICA - PROGRAMA DE ANALISE DE REDES - V08MAR05A                                PAG. 177

ANUAL 06/07 * SETEMBRO 2006 PESADA S/SE 19H N/NE 19H * ANAT0 - FSE - C13
RELATORIO COMPLETO DO SISTEMA * AREA  9 * *              LIGHT               *

X------------------ D A D O S  -  B A R R A -------------------------X------------- F L U X O S  -  C I R C U I T O S -------------X
 DA BARRA      TENSAO GERACAO INJ EQV  CARGA   ELO CC  SHUNT    MOTOR
 NUM. KV TIPO   MOD/     MW/     MW/     MW/     MW/   Mvar/     MW/
     NOME       ANG     Mvar    Mvar    Mvar    Mvar   EQUIV    Mvar  PARA BARRA                    FLUXOS
                                                FLUXO % SHUNT L         NUM.     NOME     NC     MW    Mvar  MVA/V_d   TAP  DEFAS TIE
X------------X-------X-------X-------X-------X-------X-------X-------X----X------------X--X-------X-------X-------X------X-----X---X

 1603    1  0   1.021     0.0     0.0     0.8     0.0     0.0     0.0
 CIFERAL--138  -112.6     0.0     0.0     0.4     0.0     0.0     0.0
                                                 0.8%                 267 CPP---138     1    -0.8    -0.4     0.9
 1604    1  0   1.026     0.0     0.0    39.6     0.0     0.0     0.0
 V.TELES--138  -111.5     0.0     0.0    13.2     0.0     0.0     0.0
                                                44.4%                 169 S.JOSE---138  1  -142.9   -37.4   143.9                01
                                                36.0%                 287 SARAPUI--138  1   103.3    24.2   103.4
 1605    1  0   1.026     0.0     0.0    85.5     0.0     0.0     0.0
 CAXIAS---138  -111.6     0.0     0.0    42.8     0.0     0.0     0.0
                                                56.4%                 169 S.JOSE---138  1  -182.5   -42.9   182.8                01
                                                43.4%                 272 TRIAGEM--138  1    97.0     0.1    94.6
 1606    1  0   1.023     0.0     0.0    11.4     0.0     0.0     0.0
 ELDORADO-138  -112.1     0.0     0.0     6.3     0.0     0.0     0.0
                                                18.5%                 268  Tap-CIFERAL  1    54.4    -0.5    53.2
```

```
                                                  22.5%                 287 SARAPUI--138  1   -65.8    -5.8    64.6
 1607    1  0   0.999     0.0     0.0     0.0     0.0     0.0     0.0
 C.ROCHA--TAP  -114.4     0.0     0.0     0.0     0.0     0.0     0.0
                                                  25.7%                 285 C.SOARES-138  1    35.4    26.3    44.1
                                                  20.5%                1630 C.ROCHA--138  1    35.2     2.2    35.3
                                                  44.3%                3958 CASCADURA138  1   -70.6   -28.5    76.2
 1608    1  0   1.026     0.0     0.0    30.0     0.0     0.0     0.0
 A.GRANDE-138  -112.5     0.0     0.0     5.8     0.0     0.0     0.0
                                                  76.4%                 270 CORDOVIL-138  1  -164.5   -46.6   166.6
                                                  51.6%                 288 ROSALI---138  1   111.2    31.0   112.5
                                                  11.3%                1610 MATURACA-138  1    23.3     9.8    24.6
 1609    1  0   1.017     0.0     0.0    36.4     0.0     0.0     0.0
 RAMOS----138  -113.8     0.0     0.0    12.6     0.0     0.0     0.0
                                                  20.7%                 275 CASCADURA--2  1   -56.3     5.2    55.6
                                                  12.0%                1669 CACHAMBI-138  1    19.9   -17.8    26.3
 1610    1  0   1.026     0.0     0.0    23.3     0.0     0.0     0.0
 MATURACA-138  -112.5     0.0     0.0     9.9     0.0     0.0     0.0
                                                  11.3%                1608 A.GRANDE-138  1   -23.3    -9.9    24.7
 1611    1  0   1.018     0.0     0.0    41.8     0.0     0.0     0.0
 T.NOVA---138  -113.8     0.0     0.0    -1.0     0.0     0.0     0.0
                                                  20.6%                 275 CASCADURA--2  1   -44.4    10.7    44.8
                                                   4.5%                1612 DEMOCRAT-138  1     2.6    -9.7     9.9
CEPEL - CENTRO DE PESQUISAS DE ENERGIA ELETRICA - PROGRAMA DE ANALISE DE REDES - V08MAR05A                                PAG. 178

ANUAL 06/07 * SETEMBRO 2006 PESADA S/SE 19H N/NE 19H * ANAT0 - FSE - C13
RELATORIO COMPLETO DO SISTEMA * AREA  9 * *              LIGHT              *

X----------------- D A D O S  -  B A R R A -------------------------X------------ F L U X O S  -  C I R C U I T O S ------------X
 DA BARRA      TENSAO GERACAO INJ EQV  CARGA   ELO CC  SHUNT    MOTOR
 NUM. KV TIPO   MOD/     MW/     MW/     MW/     MW/   Mvar/     MW/
     NOME       ANG     Mvar    Mvar    Mvar    Mvar   EQUIV    Mvar  PARA BARRA                   FLUXOS
                                                FLUXO % SHUNT L         NUM.     NOME     NC     MW    Mvar  MVA/V_d   TAP  DEFAS TIE
X------------X-------X-------X-------X-------X-------X-------X-------X----X------------X--X-------X-------X-------X------X-----X---X

 1612    1  0   1.019     0.0     0.0    29.4     0.0     0.0     0.0
 DEMOCRAT-138  -113.8     0.0     0.0     5.1     0.0     0.0     0.0
                                                  13.8%                 272 TRIAGEM--138  1   -26.8   -14.7    30.0
                                                   4.5%                1611 T.NOVA---138  1    -2.6     9.6     9.7
 1613    1  0   0.986     0.0     0.0     0.0     0.0     0.0     0.0
 TAP.PIRAY     -113.3     0.0     0.0     0.0     0.0     0.0     0.0
                                                  29.8%                 251 N.PECANH-138  1   -30.1    -6.5    31.3
                                                  21.6%                1614 TAP.THYSSEN   1    21.9     4.4    22.7
                                                   8.2%                1675 P.PIRAY--138  1     8.2     2.2     8.6
 1614    1  0   0.986     0.0     0.0     0.0     0.0     0.0     0.0
 TAP.THYSSEN   -113.4     0.0     0.0     0.0     0.0     0.0     0.0
                                                  11.6%                 260 S.CECILI-138  1    11.9     1.7    12.2
                                                  21.6%                1613 TAP.PIRAY     1   -21.9    -4.5    22.7
                                                  10.0%                1677 THYSSEN--138  1    10.0     2.8    10.5
 1615    1  0   1.025     0.0     0.0     3.0     0.0     0.0     0.0
 FICAP----138  -111.9     0.0     0.0     0.2     0.0     0.0     0.0
                                                  55.0%                 291 P.METRO1-138  1   121.6    17.2   119.8
                                                  56.3%                4200 S.JOSE2--138  1  -124.6   -17.4   122.7               01
 1616    1  0   1.020     0.0     0.0    50.9     0.0     0.0     0.0
 C.MARTE--138  -113.9     0.0     0.0     3.5     0.0     0.0     0.0
                                                  18.1%                 272 TRIAGEM--138  1   -38.6     4.2    38.1
                                                   8.9%                1617 TROVAO---138  1   -12.3    -7.7    14.2
 1617    1  0   1.020     0.0     0.0    25.7     0.0     0.0     0.0
 TROVAO---138  -113.8     0.0     0.0     4.1     0.0     0.0     0.0
                                                  18.1%                 272 TRIAGEM--138  1   -38.0     7.3    37.9
                                                  10.3%                1616 C.MARTE--138  1    12.3   -11.4    16.4
```

```
 1618    1  0   1.019     0.0     0.0    39.3     0.0     0.0     0.0
 COLEGIO--138  -113.2     0.0     0.0     1.4     0.0     0.0     0.0
                                              27.6%                 265 VULCAN---138  1   -58.4   -18.8    60.2
                                              11.6%                 275 CASCADURA--2  1    19.1    17.4    25.3
 1619    1  0   0.976     0.0     0.0     0.0     0.0     0.0     0.0
 R.SAUDOSO138  -110.5     0.0     0.0     0.0     0.0     0.0     0.0
                                              97.8%                 191 FUNIL--2-138  1  -133.3   -29.7   139.9               01
                                              26.1%                1620 POMBAL---138  1    43.8    -3.3    45.0
                                              56.8%                1780 RESENDE  138  1    89.5    33.0    97.7               10
 1620    1  0   0.972     0.0     0.0     2.4     0.0     0.0     0.0
 POMBAL---138  -112.0     0.0     0.0     1.1     0.0     0.0     0.0
                                              26.1%                1619 R.SAUDOSO138  1   -43.5     3.0    44.9
                                              24.7%                1666 DUPONT---TAP  1    41.1    -4.1    42.5
CEPEL - CENTRO DE PESQUISAS DE ENERGIA ELETRICA - PROGRAMA DE ANALISE DE REDES - V08MAR05A                              PAG. 179

ANUAL 06/07 * SETEMBRO 2006 PESADA S/SE 19H N/NE 19H * ANAT0 - FSE - C13
RELATORIO COMPLETO DO SISTEMA * AREA  9 * *              LIGHT                *

X----------------- D A D O S  -  B A R R A ------------------------X------------ F L U X O S  -  C I R C U I T O S ------------X
 DA BARRA      TENSAO GERACAO INJ EQV  CARGA   ELO CC  SHUNT    MOTOR
 NUM. KV TIPO   MOD/     MW/     MW/     MW/     MW/   Mvar/     MW/
     NOME       ANG     Mvar    Mvar    Mvar    Mvar   EQUIV    Mvar  PARA BARRA                    FLUXOS
                                                FLUXO % SHUNT L         NUM.     NOME     NC     MW    Mvar  MVA/V_d   TAP  DEFAS TIE
X------------X-------X-------X-------X-------X-------X-------X-------X----X------------X--X-------X-------X-------X------X-----X---X

 1621    1  0   0.970     0.0     0.0    30.6     0.0     0.0     0.0
 FONTINEL-138  -112.9     0.0     0.0     6.2     0.0     0.0     0.0
                                              32.7%                 273 SAUDADE--138  1   -54.3     4.9    56.2
                                              15.7%                 281 RETIRO---138  1    23.7   -11.1    27.0
 1622    1  0   0.990     0.0     0.0     0.0     0.0     0.0     0.0
 TAPGUANDU--1  -114.8     0.0     0.0     0.0     0.0     0.0     0.0
                                              47.3%                1624 GUANDU---138  1    77.2    22.6    81.3
                                               9.4%                1671 BERNARDINO M  1     3.8   -15.6    16.2
                                              47.8%                3975 ELETROB--138  1   -81.0    -7.0    82.1               41
 1623    1  0   0.992     0.0     0.0     0.0     0.0     0.0     0.0
 TAPGUANDU--2  -114.5     0.0     0.0     0.0     0.0     0.0     0.0
                                              11.6%                 285 C.SOARES-138  1    19.8    -2.2    20.0
                                              21.9%                1626 LAMEIRAO-138  1    37.2     4.2    37.7
                                              33.4%                3975 ELETROB--138  1   -57.0    -2.0    57.4               41
 1624    1  0   0.978     0.0     0.0    41.0     0.0     0.0     0.0
 GUANDU---138  -116.0     0.0     0.0    12.0     0.0     0.0     0.0
                                              22.0%                 294 SANTISSI-138  1    35.8     9.4    37.8
                                              47.4%                1622 TAPGUANDU--1  1   -76.8   -21.4    81.5
 1625    1  0   0.995     0.0     0.0    43.3     0.0     0.0     0.0
 JABOATAO-138  -115.7     0.0     0.0     6.4     0.0     0.0     0.0
                                              37.3%                 289 CAMARA---138  1   -43.3    -6.4    44.0
 1626    1  0   0.984     0.0     0.0    37.0     0.0     0.0     0.0
 LAMEIRAO-138  -115.8     0.0     0.0     4.9     0.0     0.0     0.0
                                              22.0%                1623 TAPGUANDU--2  1   -37.0    -4.9    37.9
 1627    1  0   0.986     0.0     0.0    49.5     0.0     0.0     0.0
 QUEIMADOS138  -113.3     0.0     0.0    13.4     0.0     0.0     0.0
                                              38.8%                 251 N.PECANH-138  1   -49.5   -13.4    52.0
 1628    1  0   1.033     0.0     0.0    30.0     0.0     0.0     0.0
 CAMERINO-138  -112.3     0.0     0.0    -8.8     0.0     0.0     0.0
                                               4.4%                 284 F.CANECA-138  1    -8.8    -6.6    10.6
                                              10.6%                1685 MACKENZIE138  1   -21.2    15.4    25.4
 1629    1  0   0.996     0.0     0.0    82.7     0.0     0.0     0.0
 N.IGUACU-138  -114.8     0.0     0.0    16.6     0.0     0.0     0.0
                                              33.3%                1632 PAV.NOVA-138  1   -52.0   -23.5    57.3
                                              18.4%                3975 ELETROB--138  1   -30.7     6.9    31.6               41
```

```
 1630    1  0   0.998     0.0     0.0    35.2     0.0     0.0     0.0
 C.ROCHA--138  -114.5     0.0     0.0     2.3     0.0     0.0     0.0
                                                 20.5%                 1607 C.ROCHA--TAP  1   -35.2    -2.3    35.3
CEPEL - CENTRO DE PESQUISAS DE ENERGIA ELETRICA - PROGRAMA DE ANALISE DE REDES - V08MAR05A                                PAG. 180

ANUAL 06/07 * SETEMBRO 2006 PESADA S/SE 19H N/NE 19H * ANAT0 - FSE - C13
RELATORIO COMPLETO DO SISTEMA * AREA  9 * *              LIGHT               *

X----------------- D A D O S  -  B A R R A -------------------------X------------ F L U X O S  -  C I R C U I T O S ------------X
 DA BARRA      TENSAO GERACAO INJ EQV  CARGA   ELO CC  SHUNT    MOTOR
 NUM. KV TIPO   MOD/     MW/     MW/     MW/     MW/   Mvar/     MW/
     NOME       ANG     Mvar    Mvar    Mvar    Mvar   EQUIV    Mvar  PARA BARRA                    FLUXOS
                                                FLUXO % SHUNT L         NUM.     NOME     NC     MW    Mvar  MVA/V_d   TAP  DEFAS TIE
X------------X-------X-------X-------X-------X-------X-------X-------X----X------------X--X-------X-------X-------X------X-----X---X

 1631    1  0   0.997     0.0     0.0    99.3     0.0     0.0     0.0
 M.BARRET-138  -114.9     0.0     0.0    13.9     0.0     0.0     0.0
                                                  9.2%                 1671 BERNARDINO M  1     2.2    15.5    15.7
                                                 61.7%                 1672 MADUREIRA138  1  -101.5   -29.4   106.1
 1632    1  0   1.004     0.0     0.0    36.6     0.0     0.0     0.0
 PAV.NOVA-138  -114.2     0.0     0.0     3.3     0.0     0.0     0.0
                                                 33.2%                 1629 N.IGUACU-138  1    52.1    23.6    57.0
                                                 53.7%                 3958 CASCADURA138  1   -88.7   -26.9    92.4
 1633    1  0   1.011     0.0     0.0    41.3     0.0     0.0     0.0
 GUADALUP-138  -113.7     0.0     0.0     9.7     0.0     0.0     0.0
                                                  9.3%                  266 S.CLARA--138  1    -1.6    16.1    16.0
                                                 27.2%                 1634 PANAMERICANA  1   -39.7   -25.8    46.8
 1634    1  0   1.014     0.0     0.0    11.4     0.0     0.0     0.0
 PANAMERICANA  -113.5     0.0     0.0     2.3     0.0     0.0     0.0
                                                 33.4%                  275 CASCADURA--2  1   -51.1   -28.0    57.5
                                                 27.2%                 1633 GUADALUP-138  1    39.7    25.7    46.7
 1635    1  0   1.003     0.0     0.0    62.8     0.0     0.0     0.0
 ALVORADA-138  -114.8     0.0     0.0    -0.4     0.0     0.0     0.0
                                                 27.3%                  282 RECREIO--138  1   -73.6    -5.0    73.5
                                                  4.5%                 1687 ITAPEBA2-138  1    10.8     5.4    12.0
 1636    1  0   1.011     0.0     0.0    40.3     0.0     0.0     0.0
 TURIACU--138  -113.5     0.0     0.0    13.7     0.0     0.0     0.0
                                                 14.0%                  286 R.FREIRE-138  1    20.6    12.8    24.0
                                                 38.2%                 3958 CASCADURA138  1   -60.9   -26.5    65.7
 1637    1  0   1.005     0.0     0.0    71.3     0.0     0.0     0.0
 ESPERANC-138  -115.6     0.0     0.0    33.6     0.0     0.0     0.0
                                                  4.8%                  279 BRAHMA---138  1     7.3    -0.6     7.3
                                                 55.8%                 3988 ZIN1--TAP138  1   -78.6   -33.0    84.8
 1638    1  0   1.002     0.0     0.0    36.8     0.0     0.0     0.0
 A.FRANCO-138  -115.0     0.0     0.0     5.1     0.0     0.0     0.0
                                                 31.4%                 1640 P.MIGUEL-138  1   -36.8    -5.1    37.1
 1639    1  0   1.011     0.0     0.0    12.4     0.0     0.0     0.0
 M.ALTO---138  -115.6     0.0     0.0     3.4     0.0     0.0     0.0
                                                 15.4%                  278 PALMARES-138  1    -2.1   -22.7    22.5
                                                 14.8%                  293 CACHAMORRA    1   -10.3    19.3    21.6
 1640    1  0   1.007     0.0     0.0    35.2     0.0     0.0     0.0
 P.MIGUEL-138  -114.3     0.0     0.0    12.8     0.0     0.0     0.0
                                                 62.4%                   98 JACARE-2-138  1   -72.1   -17.4    73.6               01
                                                 31.3%                 1638 A.FRANCO-138  1    36.9     4.6    36.9
CEPEL - CENTRO DE PESQUISAS DE ENERGIA ELETRICA - PROGRAMA DE ANALISE DE REDES - V08MAR05A                                PAG. 181

ANUAL 06/07 * SETEMBRO 2006 PESADA S/SE 19H N/NE 19H * ANAT0 - FSE - C13
RELATORIO COMPLETO DO SISTEMA * AREA  9 * *              LIGHT               *

X----------------- D A D O S  -  B A R R A -------------------------X------------ F L U X O S  -  C I R C U I T O S ------------X
```

```
 DA BARRA      TENSAO GERACAO INJ EQV  CARGA   ELO CC  SHUNT    MOTOR
 NUM. KV TIPO   MOD/     MW/     MW/     MW/     MW/   Mvar/     MW/
     NOME       ANG     Mvar    Mvar    Mvar    Mvar   EQUIV    Mvar  PARA BARRA                    FLUXOS
                                                FLUXO % SHUNT L         NUM.     NOME     NC     MW    Mvar  MVA/V_d   TAP  DEFAS TIE
X------------X-------X-------X-------X-------X-------X-------X-------X----X------------X--X-------X-------X-------X------X-----X---X

 1641    1  0   1.009     0.0     0.0    37.2     0.0     0.0     0.0
 V.VALQUE-138  -114.2     0.0     0.0     3.2     0.0     0.0     0.0
                                            17.0%                    180 JACAREP--138  1   -37.2    -3.2    37.0              01
 1642    1  0   1.020     0.0     0.0    38.7     0.0     0.0     0.0
 PIEDADE--138  -112.7     0.0     0.0    -1.0     0.0     0.0     0.0
                                            76.5%                    178 GRAJAU---138  1  -163.2   -47.7   166.8              01
                                            60.1%                   3958 CASCADURA138  1   124.5    48.7   131.1
 1643    1  0   1.025     0.0     0.0    34.2     0.0     0.0     0.0
 B.MATO---138  -112.1     0.0     0.0     3.7     0.0     0.0     0.0
                                            80.5%                    178 GRAJAU---138  1  -172.1   -52.0   175.4              01
                                            65.4%                   3958 CASCADURA138  1   137.9    48.3   142.6
 1644    1  0   1.017     0.0     0.0     0.0     0.0     0.0     0.0
 PDAGUA-A      -113.9     0.0     0.0     0.0     0.0     0.0     0.0
                                             9.0%                    180 JACAREP--138  1     3.6    19.5    19.5              01
                                            45.8%                    283 T.SUL----138  1   -97.3   -29.0    99.9
                                            42.5%                   1645 P.D'AGUA-138  1    93.8     9.5    92.7
 1645    1  0   1.016     0.0     0.0    93.7     0.0     0.0     0.0
 P.D'AGUA-138  -114.1     0.0     0.0     9.3     0.0     0.0     0.0
                                            42.5%                   1644 PDAGUA-A      1   -93.7    -9.3    92.7
 1646    1  0   1.010     0.0     0.0     0.0     0.0     0.0     0.0
 B.TIJUCA-A    -114.2     0.0     0.0     0.0     0.0     0.0     0.0
                                             8.8%                    180 JACAREP--138  1   -19.2     1.5    19.1              01
                                            31.6%                   1647 B.TIJUCA-138  1    82.7    23.1    85.0
                                            30.9%                   1648 S.CONRAD-138  1   -63.4   -24.6    67.4
 1647    1  0   1.000     0.0     0.0    82.3     0.0     0.0     0.0
 B.TIJUCA-138  -115.3     0.0     0.0    22.0     0.0     0.0     0.0
                                            31.7%                   1646 B.TIJUCA-A    1   -82.3   -22.0    85.2
 1648    1  0   1.028     0.0     0.0    28.0     0.0     0.0     0.0
 S.CONRAD-138  -112.7     0.0     0.0     1.2     0.0     0.0     0.0
                                            42.7%                    283 T.SUL----138  1   -91.9   -26.6    93.0
                                            30.7%                   1646 B.TIJUCA-A    1    63.9    25.4    66.9
 1649    1  0   1.030     0.0     0.0    32.3     0.0     0.0     0.0
 LEOPOLDO-138  -111.7     0.0     0.0     0.6     0.0     0.0     0.0
                                            39.4%                    178 GRAJAU---138  1   -85.2    23.7    85.8              01
                                            25.9%                    284 F.CANECA-138  1    52.9   -24.3    56.5
 1650    1  0   1.031     0.0     0.0    51.9     0.0     0.0     0.0
 R.COMPRI-138  -112.1     0.0     0.0     1.1     0.0     0.0     0.0
                                            36.5%                    178 GRAJAU---138  1   -78.4    24.0    79.5              01
                                            16.2%                    284 F.CANECA-138  1    26.5   -25.1    35.4
CEPEL - CENTRO DE PESQUISAS DE ENERGIA ELETRICA - PROGRAMA DE ANALISE DE REDES - V08MAR05A                                PAG. 182

ANUAL 06/07 * SETEMBRO 2006 PESADA S/SE 19H N/NE 19H * ANAT0 - FSE - C13
RELATORIO COMPLETO DO SISTEMA * AREA  9 * *             LIGHT              *

X----------------- D A D O S  -  B A R R A -------------------------X------------ F L U X O S  -  C I R C U I T O S ------------X
 DA BARRA      TENSAO GERACAO INJ EQV  CARGA   ELO CC  SHUNT    MOTOR
 NUM. KV TIPO   MOD/     MW/     MW/     MW/     MW/   Mvar/     MW/
     NOME       ANG     Mvar    Mvar    Mvar    Mvar   EQUIV    Mvar  PARA BARRA                    FLUXOS
                                                FLUXO % SHUNT L         NUM.     NOME     NC     MW    Mvar  MVA/V_d   TAP  DEFAS TIE
X------------X-------X-------X-------X-------X-------X-------X-------X----X------------X--X-------X-------X-------X------X-----X---X

 1651    1  0   1.032     0.0     0.0     0.0     0.0     0.0     0.0
 J.BOTA-A-138  -111.9     0.0     0.0     0.0     0.0     0.0     0.0
                                            28.7%                    178 GRAJAU---138  1   -59.2    25.5    62.5              01
```

```
                                                 28.6%                 284 F.CANECA-138  1    59.2   -25.3    62.4
                                                  0.2%                1665 JBOTANI2-138  1     0.0    -0.2     0.2
 1652    1  0   1.032     0.0     0.0     0.0     0.0     0.0     0.0
 J.BOTA-B-138  -111.9     0.0     0.0     0.0     0.0     0.0     0.0
                                                 28.7%                 178 GRAJAU---138  1   -59.2    25.5    62.5                01
                                                 28.6%                 284 F.CANECA-138  1    59.2   -25.3    62.4
                                                  0.2%                1665 JBOTANI2-138  1     0.0    -0.2     0.2
 1653    1  0   1.030     0.0     0.0    30.1     0.0     0.0     0.0
 URUGUAI--138  -111.8     0.0     0.0    10.0     0.0     0.0     0.0
                                                 25.7%                 284 F.CANECA-138  1    50.0   -28.9    56.1
                                                 36.7%                1670 MANGUEIRA138  1   -80.1    18.9    79.9
 1654    1  0   0.975     0.0     0.0    26.8     0.0     0.0     0.0
 CENTENARI138  -114.4     0.0     0.0     9.6     0.0     0.0     0.0
                                                 17.0%                 260 S.CECILI-138  1   -26.8    -9.6    29.2
 1655    1  0   1.030     0.0     0.0    28.9     0.0     0.0     0.0
 ACAMPISTA138  -111.6     0.0     0.0    -2.4     0.0     0.0     0.0
                                                 39.0%                 178 GRAJAU---138  1   -83.4    26.5    84.9                01
                                                 26.5%                 284 F.CANECA-138  1    54.5   -24.1    57.8
 1656    1  0   1.030     0.0     0.0     0.0     0.0     0.0     0.0
 M.VAZ-1--138  -112.5     0.0     0.0     0.0     0.0     0.0     0.0
                                                 20.1%                 283 T.SUL----138  1   -43.6    11.4    43.7
                                                 20.5%                1658 LEBLON---138  1    22.1    -3.6    21.7
                                                 20.0%                1660 JBOTANI1-138  1    21.5    -7.8    22.2
 1657    1  0   1.030     0.0     0.0     0.0     0.0     0.0     0.0
 M.VAZ-2--138  -112.5     0.0     0.0     0.0     0.0     0.0     0.0
                                                 19.7%                 283 T.SUL----138  1   -42.7    11.9    43.0
                                                 21.9%                1658 LEBLON---138  1    23.6    -3.5    23.2
                                                 18.2%                1660 JBOTANI1-138  1    19.0    -8.3    20.2
 1658    1  0   1.030     0.0     0.0    45.7     0.0     0.0     0.0
 LEBLON---138  -112.5     0.0     0.0     0.4     0.0     0.0     0.0
                                                 20.2%                1656 M.VAZ-1--138  1   -22.1    -0.2    21.4
                                                 21.6%                1657 M.VAZ-2--138  1   -23.6    -0.2    22.9
 1659    1  0   1.031     0.0     0.0    41.6     0.0     0.0     0.0
 P.SEIS---138  -112.6     0.0     0.0    -5.5     0.0     0.0     0.0
                                                 26.7%                 283 T.SUL----138  1   -43.0     9.9    42.8
                                                  2.8%                1662 COPACABAN138  1     1.4    -4.4     4.4
CEPEL - CENTRO DE PESQUISAS DE ENERGIA ELETRICA - PROGRAMA DE ANALISE DE REDES - V08MAR05A                                PAG. 183

ANUAL 06/07 * SETEMBRO 2006 PESADA S/SE 19H N/NE 19H * ANAT0 - FSE - C13
RELATORIO COMPLETO DO SISTEMA * AREA  9 * *              LIGHT               *

X------------------ D A D O S  -  B A R R A -------------------------X------------- F L U X O S  -  C I R C U I T O S -------------X
 DA BARRA      TENSAO GERACAO INJ EQV  CARGA   ELO CC  SHUNT    MOTOR
 NUM. KV TIPO   MOD/     MW/     MW/     MW/     MW/   Mvar/     MW/
     NOME       ANG     Mvar    Mvar    Mvar    Mvar   EQUIV    Mvar  PARA BARRA                    FLUXOS
                                                FLUXO % SHUNT L         NUM.     NOME     NC     MW    Mvar  MVA/V_d   TAP  DEFAS TIE
X------------X-------X-------X-------X-------X-------X-------X-------X----X------------X--X-------X-------X-------X------X-----X---X

 1660    1  0   1.030     0.0     0.0    40.5     0.0     0.0     0.0
 JBOTANI1-138  -112.5     0.0     0.0    -7.7     0.0     0.0     0.0
                                                 19.0%                1656 M.VAZ-1--138  1   -21.5     3.6    21.1
                                                 17.0%                1657 M.VAZ-2--138  1   -19.0     4.1    18.9
 1661    1  0   1.030     0.0     0.0    20.5     0.0     0.0     0.0
 HUMAITA--138  -112.5     0.0     0.0    -1.3     0.0     0.0     0.0
                                                 12.8%                 283 T.SUL----138  1   -13.3     2.6    13.2
                                                 12.8%                 283 T.SUL----138  2   -13.3     2.6    13.2
                                                  4.4%                1688 METRO BOTA-1  1     6.1    -4.0     7.1
 1662    1  0   1.031     0.0     0.0    35.4     0.0     0.0     0.0
 COPACABAN138  -112.6     0.0     0.0    11.0     0.0     0.0     0.0
                                                 30.1%                 283 T.SUL----138  1   -48.3    11.2    48.1
```

```
                                                  10.3%                 1659 P.SEIS---138  1    -1.4   -17.0    16.5
                                                  11.7%                 1663 LEME-----138  1    14.3    -5.3    14.8
 1663    1  0   1.031     0.0     0.0    14.3     0.0     0.0     0.0
 LEME-----138  -112.6     0.0     0.0    -2.6     0.0     0.0     0.0
                                                  11.2%                 1662 COPACABAN138  1   -14.3     2.6    14.1
 1664    1  0   1.050     0.0     0.0     0.6     0.0     0.0     0.0
 CEPEL----138  -113.3     0.0     0.0     0.3     0.0     0.0     0.0
                                                   0.7%                  173 ADRIANO--138  1    -0.3     0.1     0.3                01
                                                   1.0%                  173 ADRIANO--138  2    -0.3    -0.4     0.5                01
 1665    1  0   1.032     0.0     0.0     0.0     0.0     0.0     0.0
 JBOTANI2-138  -111.9     0.0     0.0     0.0     0.0     0.0     0.0
                                                   0.0%                 1651 J.BOTA-A-138  1     0.0     0.0     0.0
                                                   0.0%                 1652 J.BOTA-B-138  1     0.0     0.0     0.0
 1666    1  0   0.971     0.0     0.0     0.0     0.0     0.0     0.0
 DUPONT---TAP  -112.2     0.0     0.0     0.0     0.0     0.0     0.0
                                                  24.2%                  273 SAUDADE--138  1    40.2    -4.2    41.6
                                                  24.7%                 1620 POMBAL---138  1   -41.1     4.1    42.5
                                                   0.9%                 1667 DUPONT---138  1     0.9     0.1     0.9
 1667    1  0   0.971     0.0     0.0     0.9     0.0     0.0     0.0
 DUPONT---138  -112.2     0.0     0.0     0.2     0.0     0.0     0.0
                                                   0.9%                 1666 DUPONT---TAP  1    -0.9    -0.2     0.9
 1668    1  0   1.010     0.0     0.0    15.3     0.0     0.0     0.0
 INMETRO--138  -115.2     0.0     0.0     3.1     0.0     0.0     0.0
                                                  14.7%                  264  Tap-INMETRO  1   -15.3    -3.1    15.5
CEPEL - CENTRO DE PESQUISAS DE ENERGIA ELETRICA - PROGRAMA DE ANALISE DE REDES - V08MAR05A                                PAG. 184

ANUAL 06/07 * SETEMBRO 2006 PESADA S/SE 19H N/NE 19H * ANAT0 - FSE - C13
RELATORIO COMPLETO DO SISTEMA * AREA  9 * *             LIGHT              *

X----------------- D A D O S  -  B A R R A -------------------------X------------ F L U X O S  -  C I R C U I T O S ------------X
 DA BARRA      TENSAO GERACAO INJ EQV  CARGA   ELO CC  SHUNT    MOTOR
 NUM. KV TIPO   MOD/     MW/     MW/     MW/     MW/   Mvar/     MW/
     NOME       ANG     Mvar    Mvar    Mvar    Mvar   EQUIV    Mvar  PARA BARRA                    FLUXOS
                                                FLUXO % SHUNT L        NUM.     NOME     NC     MW    Mvar  MVA/V_d   TAP  DEFAS TIE
X------------X-------X-------X-------X-------X-------X-------X-------X----X------------X--X-------X-------X-------X------X-----X---X

 1669    1  0   1.018     0.0     0.0    51.0     0.0     0.0     0.0
 CACHAMBI-138  -113.9     0.0     0.0     0.0     0.0     0.0     0.0
                                                  16.1%                  272 TRIAGEM--138  1   -31.1   -17.7    35.1
                                                  12.0%                 1609 RAMOS----138  1   -19.9    17.7    26.2
 1670    1  0   1.030     0.0     0.0    12.1     0.0     0.0     0.0
 MANGUEIRA138  -111.6     0.0     0.0     3.4     0.0     0.0     0.0
                                                  41.7%                  178 GRAJAU---138  1   -92.3    15.3    90.8                01
                                                  36.7%                 1653 URUGUAI--138  1    80.2   -18.7    80.0
 1671    1  0   0.994     0.0     0.0     6.0     0.0     0.0     0.0
 BERNARDINO M  -114.9     0.0     0.0     1.0     0.0     0.0     0.0
                                                   9.0%                 1622 TAPGUANDU--1  1    -3.8    14.9    15.5
                                                   9.4%                 1631 M.BARRET-138  1    -2.2   -15.9    16.2
 1672    1  0   1.014     0.0     0.0    12.1     0.0     0.0     0.0
 MADUREIRA138  -113.3     0.0     0.0     9.1     0.0     0.0     0.0
                                                  61.5%                 1631 M.BARRET-138  1   102.4    32.1   105.8
                                                  69.8%                 3958 CASCADURA138  1  -114.5   -41.2   120.0
 1673    1  0   0.972     0.0     0.0   189.0     0.0     0.0     0.0
 C.S.N.---138  -113.0     0.0     0.0    62.1     0.0     0.0     0.0
                                                  32.7%                  274 V.REDOND-138  1   -47.2   -50.7    71.2
                                                  26.5%                  274 V.REDOND-138  2   -47.2   -50.7    71.2
                                                  26.5%                  274 V.REDOND-138  3   -47.2   -50.7    71.2
                                                  31.6%                  274 V.REDOND-138  4   -47.6   -47.2    68.9
                                                   1.4%                 3972 CSN-CONS.INT  1     0.0   137.1   141.0                41
 1674    1  0   0.972     0.0     0.0     7.6     0.0     0.0     0.0
```

```
 S.BARBARA138  -112.7     0.0     0.0     3.4     0.0     0.0     0.0
                                                14.5%                 1676 S BARRA MANS  1   -21.4    11.4    24.9
                                                12.1%                 1699 TUPY-----138  1    13.8   -14.8    20.8
 1675    1  0   0.986     0.0     0.0     8.2     0.0     0.0     0.0
 P.PIRAY--138  -113.3     0.0     0.0     2.4     0.0     0.0     0.0
                                                 8.3%                 1613 TAP.PIRAY     1    -8.2    -2.4     8.7
 1676    1  0   0.971     0.0     0.0    23.6     0.0     0.0     0.0
 S BARRA MANS  -112.5     0.0     0.0    12.1     0.0     0.0     0.0
                                                26.9%                  273 SAUDADE--138  1   -45.0    -0.4    46.3
                                                14.6%                 1674 S.BARBARA138  1    21.4   -11.7    25.1
 1677    1  0   0.985     0.0     0.0    10.0     0.0     0.0     0.0
 THYSSEN--138  -113.4     0.0     0.0     2.9     0.0     0.0     0.0
                                                10.1%                 1614 TAP.THYSSEN   1   -10.0    -2.9    10.6
CEPEL - CENTRO DE PESQUISAS DE ENERGIA ELETRICA - PROGRAMA DE ANALISE DE REDES - V08MAR05A                                PAG. 185

ANUAL 06/07 * SETEMBRO 2006 PESADA S/SE 19H N/NE 19H * ANAT0 - FSE - C13
RELATORIO COMPLETO DO SISTEMA * AREA  9 * *              LIGHT                *

X----------------- D A D O S  -  B A R R A ------------------------X------------ F L U X O S  -  C I R C U I T O S ------------X
 DA BARRA      TENSAO GERACAO INJ EQV  CARGA   ELO CC  SHUNT    MOTOR
 NUM. KV TIPO   MOD/     MW/     MW/     MW/     MW/   Mvar/     MW/
     NOME       ANG     Mvar    Mvar    Mvar    Mvar   EQUIV    Mvar  PARA BARRA                    FLUXOS
                                                FLUXO % SHUNT L         NUM.     NOME     NC     MW    Mvar  MVA/V_d   TAP  DEFAS TIE
X------------X-------X-------X-------X-------X-------X-------X-------X----X------------X--X-------X-------X-------X------X-----X---X

 1678    1  0   1.005     0.0     0.0    25.1     0.0     0.0     0.0
 ITAPEBA--138  -114.5     0.0     0.0    12.5     0.0     0.0     0.0
                                                10.4%                 1695 CURICICA-138  1   -25.1   -12.5    27.9
 1679    1  0   1.027     0.0     0.0    30.1     0.0     0.0     0.0
 P.ERNESTO138  -112.7     0.0     0.0     7.4     0.0     0.0     0.0
                                                42.6%                 1680 AEROPORTO138  1    53.1   -13.2    53.2
                                                41.8%                 1683 FUNDAO---138  1    51.4   -15.6    52.3
                                                47.7%                 1692 B.DE PINA138  1   -67.3    10.7    66.3
                                                47.7%                 1692 B.DE PINA138  2   -67.3    10.7    66.3
 1680  138  0   1.026     0.0     0.0    18.0     0.0     0.0     0.0
 AEROPORTO138  -112.8     0.0     0.0    13.4     0.0     0.0     0.0
                                                41.3%                 1679 P.ERNESTO138  1   -53.0    -0.4    51.6
                                                30.3%                 1681 GOVERNAD-138  1    35.0   -13.0    36.4
 1681    1  0   1.025     0.0     0.0    35.7     0.0     0.0     0.0
 GOVERNAD-138  -112.9     0.0     0.0    11.4     0.0     0.0     0.0
                                                28.4%                 1680 AEROPORTO138  1   -34.9     2.0    34.1
                                                10.9%                 1682 GUANABARA138  1    -0.8   -13.4    13.1
 1682    1  0   1.025     0.0     0.0    34.6     0.0     0.0     0.0
 GUANABARA138  -112.9     0.0     0.0    10.5     0.0     0.0     0.0
                                                 2.1%                 1681 GOVERNAD-138  1     0.8     2.4     2.5
                                                30.6%                 1683 FUNDAO---138  1   -35.4   -12.9    36.7
 1683    1  0   1.027     0.0     0.0    15.9     0.0     0.0     0.0
 FUNDAO---138  -112.8     0.0     0.0     4.9     0.0     0.0     0.0
                                                40.5%                 1679 P.ERNESTO138  1   -51.3     8.4    50.7
                                                30.7%                 1682 GUANABARA138  1    35.4   -13.3    36.9
 1684    1  0   1.033     0.0     0.0    22.6     0.0     0.0     0.0
 S.ANTONIO138  -112.3     0.0     0.0    -7.9     0.0     0.0     0.0
                                                 5.7%                  284 F.CANECA-138  1   -10.4     0.9    10.1
                                                 9.5%                  284 F.CANECA-138  2   -14.6     9.2    16.7
                                                 7.0%                  284 F.CANECA-138  3   -14.6     9.2    16.7
                                                 9.1%                 1690 STA.LUZIA138  1     8.5    -5.7     9.9
                                                 9.1%                 1690 STA.LUZIA138  2     8.5    -5.7     9.9
 1685    1  0   1.033     0.0     0.0    27.5     0.0     0.0     0.0
 MACKENZIE138  -112.3     0.0     0.0    -1.7     0.0     0.0     0.0
                                                21.0%                  284 F.CANECA-138  1   -48.7    18.0    50.3
```

```
                                                  10.8%                 1628 CAMERINO-138  1    21.2   -16.3    25.9
 1686    1  0   1.033     0.0     0.0    48.1     0.0     0.0     0.0
 BAEPENDI-138  -112.4     0.0     0.0    -1.3     0.0     0.0     0.0
                                                  24.3%                  284 F.CANECA-138  2   -60.2    13.5    59.7
                                                   7.9%                  290 SAMARITANO    1    12.1   -12.2    16.6
CEPEL - CENTRO DE PESQUISAS DE ENERGIA ELETRICA - PROGRAMA DE ANALISE DE REDES - V08MAR05A                          PAG. 186

ANUAL 06/07 * SETEMBRO 2006 PESADA S/SE 19H N/NE 19H * ANAT0 - FSE - C13
RELATORIO COMPLETO DO SISTEMA * AREA  9 * *              LIGHT               *

X----------------- D A D O S  -  B A R R A -------------------------X------------ F L U X O S  -  C I R C U I T O S ------------X
 DA BARRA      TENSAO GERACAO INJ EQV  CARGA   ELO CC  SHUNT    MOTOR
 NUM. KV TIPO   MOD/     MW/     MW/     MW/     MW/   Mvar/     MW/
     NOME       ANG     Mvar    Mvar    Mvar    Mvar   EQUIV    Mvar  PARA BARRA                    FLUXOS
                                                FLUXO % SHUNT L         NUM.     NOME     NC     MW    Mvar  MVA/V_d   TAP  DEFAS TIE
X------------X-------X-------X-------X-------X-------X-------X-------X----X------------X--X-------X-------X-------X------X-----X---X

 1687  138  0   1.003     0.0     0.0    10.8     0.0     0.0     0.0
 ITAPEBA2-138  -114.8     0.0     0.0     5.4     0.0     0.0     0.0
                                                   4.5%                 1635 ALVORADA-138  1   -10.8    -5.4    12.0
 1688    1  0   1.030     0.0     0.0     6.1     0.0     0.0     0.0
 METRO BOTA-1  -112.5     0.0     0.0     0.3     0.0     0.0     0.0
                                                   3.7%                 1661 HUMAITA--138  1    -6.1    -0.3     5.9
 1689    1  0   1.033     0.0     0.0     6.1     0.0     0.0     0.0
 METRO BOTA-2  -112.3     0.0     0.0     0.3     0.0     0.0     0.0
                                                   6.0%                  284 F.CANECA-138  1    -6.1    -0.3     5.9
 1690    1  0   1.033     0.0     0.0    17.0     0.0     0.0     0.0
 STA.LUZIA138  -112.3     0.0     0.0    -3.2     0.0     0.0     0.0
                                                   7.7%                 1684 S.ANTONIO138  1    -8.5     1.6     8.4
                                                   7.7%                 1684 S.ANTONIO138  2    -8.5     1.6     8.4
 1691    1  0   1.034     0.0     0.0    30.4     0.0     0.0     0.0
 BOTAFOGO-138  -112.4     0.0     0.0    -6.0     0.0     0.0     0.0
                                                  18.5%                  290 SAMARITANO    1   -15.2     3.0    15.0
                                                  18.5%                  290 SAMARITANO    2   -15.2     3.0    15.0
 1692    1  0   1.027     0.0     0.0    40.7     0.0     0.0     0.0
 B.DE PINA138  -112.6     0.0     0.0     8.3     0.0     0.0     0.0
                                                  58.4%                  270 CORDOVIL-138  1   -57.7    16.5    58.4
                                                  58.4%                  270 CORDOVIL-138  2   -57.7    16.5    58.4
                                                  32.7%                  270 CORDOVIL-138  3   -59.9    12.5    59.6
                                                  50.8%                 1679 P.ERNESTO138  1    67.3   -26.9    70.6
                                                  50.8%                 1679 P.ERNESTO138  2    67.3   -26.9    70.6
 1693    1  0   1.024     0.0     0.0    37.9     0.0     0.0     0.0
 VIG.GERAL138  -112.7     0.0     0.0     8.5     0.0     0.0     0.0
                                                  29.9%                  265 VULCAN---138  1    63.5    20.5    65.2
                                                  47.2%                  270 CORDOVIL-138  1  -101.4   -29.0   103.0
 1694    1  0   0.993     0.0     0.0    17.9     0.0     0.0     0.0
 BAYER----138  -114.6     0.0     0.0     4.2     0.0     0.0     0.0
                                                  10.8%                 1696 A.BRANCA-138  1   -17.9    -4.2    18.5
 1695    1  0   1.007     0.0     0.0    57.2     0.0     0.0     0.0
 CURICICA-138  -114.3     0.0     0.0    15.1     0.0     0.0     0.0
                                                  32.0%                  180 JACAREP--138  1   -82.3   -27.3    86.1               01
                                                  10.3%                 1678 ITAPEBA--138  1    25.1    12.2    27.7
 1696    1  0   0.993     0.0     0.0    57.7     0.0     0.0     0.0
 A.BRANCA-138  -114.6     0.0     0.0    26.3     0.0     0.0     0.0
                                                  47.7%                  280 A.BRANCA-TAP  1   -75.6   -30.5    82.1
                                                  10.8%                 1694 BAYER----138  1    17.9     4.2    18.5
CEPEL - CENTRO DE PESQUISAS DE ENERGIA ELETRICA - PROGRAMA DE ANALISE DE REDES - V08MAR05A                          PAG. 187

ANUAL 06/07 * SETEMBRO 2006 PESADA S/SE 19H N/NE 19H * ANAT0 - FSE - C13
RELATORIO COMPLETO DO SISTEMA * AREA  9 * *              LIGHT               *
```

```
X----------------- D A D O S  -  B A R R A ------------------------X------------ F L U X O S  -  C I R C U I T O S ------------X
 DA BARRA      TENSAO GERACAO INJ EQV  CARGA   ELO CC  SHUNT    MOTOR
 NUM. KV TIPO   MOD/     MW/     MW/     MW/     MW/   Mvar/     MW/
     NOME       ANG     Mvar    Mvar    Mvar    Mvar   EQUIV    Mvar  PARA BARRA                    FLUXOS
                                                FLUXO % SHUNT L         NUM.     NOME     NC     MW    Mvar  MVA/V_d   TAP  DEFAS TIE
X------------X-------X-------X-------X-------X-------X-------X-------X----X------------X--X-------X-------X-------X------X-----X---X

 1697    1  0   1.001     0.0     0.0    46.0     0.0     0.0     0.0
 COSMOS---138  -115.9     0.0     0.0    17.8     0.0     0.0     0.0
                                                50.8%                 3989 ZIN2--TAP138  1   -46.0   -17.8    49.3
 1699    1  0   0.973     0.0     0.0     1.0     0.0     0.0     0.0
 TUPY-----138  -112.8     0.0     0.0     0.2     0.0     0.0     0.0
                                                11.7%                  274 V.REDOND-138  1    12.7   -14.9    20.2
                                                12.0%                 1674 S.BARBARA138  1   -13.7    14.7    20.7
 3958    1  0   1.014     0.0     0.0     0.0     0.0     0.0     0.0
 CASCADURA138  -113.2     0.0     0.0     0.0     0.0     0.0     0.0
                                                18.6%                   98 JACARE-2-138  1    40.8     4.1    40.4               01
                                                54.5%                  178 GRAJAU---138  1  -114.9   -36.4   118.9               01
                                                44.1%                 1607 C.ROCHA--TAP  1    71.0    29.5    75.9
                                                53.6%                 1632 PAV.NOVA-138  1    89.2    28.2    92.2
                                                38.2%                 1636 TURIACU--138  1    61.0    26.7    65.7
                                                60.2%                 1642 PIEDADE--138  1  -124.3   -47.5   131.2
                                                65.5%                 1643 B.MATO---138  1  -137.3   -45.7   142.7
                                                69.8%                 1672 MADUREIRA138  1   114.5    41.2   120.0
 3988    1  0   1.009     0.0     0.0     0.0     0.0     0.0     0.0
 ZIN1--TAP138  -115.4     0.0     0.0     0.0     0.0     0.0     0.0
                                                21.4%                  184 S.CRUZ---138  1   -79.2    -9.2    79.1               01
                                                 6.4%                  277 ZIN------138  1     0.4   -24.1    23.9
                                                55.8%                 1637 ESPERANC-138  1    78.8    33.3    84.8
 3989    1  0   1.009     0.0     0.0     0.0     0.0     0.0     0.0
 ZIN2--TAP138  -115.3     0.0     0.0     0.0     0.0     0.0     0.0
                                                18.9%                  184 S.CRUZ---138  1   -70.4    -4.3    69.9               01
                                                 7.4%                  277 ZIN------138  1    24.2   -13.5    27.4
                                                50.6%                 1697 COSMOS---138  1    46.2    17.8    49.0


TOTAIS DA AREA  9


X--------X--------X--------X--------X--------X--------X--------X--------X
  GERACAO  INJ EQV   CARGA   ELO CC    SHUNT   EXPORT   IMPORT   PERDAS
    MW/      MW/      MW/     MW/     Mvar/     MW/      MW/      MW/
   Mvar     Mvar     Mvar    Mvar     EQUIV    Mvar     Mvar     Mvar
X--------X--------X--------X--------X--------X--------X--------X--------X

    654.0      0.0   4130.1      0.0    336.8    726.1   4236.0     33.8
    235.7      0.0    834.8      0.0      0.0    584.4    516.8   -329.9
```





```
X----------------- D A D O S  -  B A R R A ------------------------X------------ F L U X O S  -  C I R C U I T O S ------------X
 DA BARRA      TENSAO GERACAO INJ EQV  CARGA   ELO CC  SHUNT    MOTOR
 NUM. KV TIPO   MOD/     MW/     MW/     MW/     MW/   Mvar/     MW/
     NOME       ANG     Mvar    Mvar    Mvar    Mvar   EQUIV    Mvar  PARA BARRA                    FLUXOS
                                                FLUXO % SHUNT L         NUM.     NOME     NC     MW    Mvar  MVA/V_d   TAP  DEFAS TIE
X------------X-------X-------X-------X-------X-------X-------X-------X----X------------X--X-------X-------X-------X------X-----X---X
```

```
 1700    1  0   1.014    20.0     0.0     0.0     0.0     0.0     0.0
 AREAL    6.6  -118.1     2.0     0.0     0.0     0.0     0.0     0.0
                                              90.1%                 1707 AREAL     69  1    20.0     2.0    19.8 1.000F
 1701    1  0   1.006     4.8     0.0     0.0     0.0     0.0     0.0
 FAGUNDES 2.3  -119.9     0.0     0.0     0.0     0.0     0.0     0.0
                                              79.5%                 1708 FAGUNDES  69  1     4.8     0.0     4.8 1.000F
 1702    1  0   1.006     8.4     0.0     0.0     0.0     0.0     0.0
 PIABANHA 2.3  -120.1     0.0     0.0     0.0     0.0     0.0     0.0
                                              69.6%                 1709 PIABANHA  69  1     8.4     0.0     8.3 1.000F
 1703    1  0   0.989     6.0     0.0     0.0     0.0     0.0     0.0
 MACABU   3.0  -124.9     0.0     0.0     0.0     0.0     0.0     0.0
                                              55.2%                 1750 MACABU    69  1     6.0     0.0     6.1 1.000F
 1704    1  0   0.987    12.0     0.0     0.0     0.0     0.0     0.0
 MACABU   6.6  -122.8     0.0     0.0     0.0     0.0     0.0     0.0
                                              81.1%                 1750 MACABU    69  1    12.0     0.0    12.2 1.000F
 1707    1  0   1.009     0.0     0.0     9.7     0.0     0.0     0.0
 AREAL     69  -122.8     0.0     0.0     1.2     0.0     0.0     0.0
                                              90.1%                 1700 AREAL    6.6  1   -20.0    -0.4    19.8
                                              10.7%                 1709 PIABANHA  69  1    10.3    -0.8    10.2
 1708    1  0   1.008     0.0     0.0     1.3     0.0     0.0     0.0
 FAGUNDES  69  -123.0     0.0     0.0     0.4     0.0     0.0     0.0
                                              79.5%                 1701 FAGUNDES 2.3  1    -4.8     0.3     4.8
                                               8.8%                 1709 PIABANHA  69  1     3.5    -0.7     3.5
 1709    1  0   1.008     0.0     0.0    15.3     0.0     0.0     0.0
 PIABANHA  69  -123.0     0.0     0.0     5.3     0.0     0.0     0.0
                                              69.6%                 1702 PIABANHA 2.3  1    -8.4     0.4     8.3
                                              10.7%                 1707 AREAL     69  1   -10.3     0.6    10.2
                                               8.8%                 1708 FAGUNDES  69  1    -3.5     0.6     3.5
                                               6.8%                 1712 R.CIDADE1 69  1     2.6    -1.5     2.9
                                              14.0%                 1713 R.CIDADE2 69  1     4.2    -0.7     4.2
                                               5.4%                 1715 ITAMARATI 69  1     0.0    -2.3     2.3
                                               5.6%                 1715 ITAMARATI 69  2     0.1    -2.4     2.4
 1712    1  0   1.007     0.0     0.0    12.7     0.0     0.0     0.0
 R.CIDADE1 69  -123.5     0.0     0.0     4.1     0.0     0.0     0.0
                                               6.4%                 1709 PIABANHA  69  1    -2.6     1.0     2.7
                                              26.3%                 1715 ITAMARATI 69  1   -10.1    -5.1    11.3
CEPEL - CENTRO DE PESQUISAS DE ENERGIA ELETRICA - PROGRAMA DE ANALISE DE REDES - V08MAR05A                          PAG. 189

ANUAL 06/07 * SETEMBRO 2006 PESADA S/SE 19H N/NE 19H * ANAT0 - FSE - C13
RELATORIO COMPLETO DO SISTEMA * AREA 10 * *             CERJ              *

X----------------- D A D O S  -  B A R R A -------------------------X------------ F L U X O S  -  C I R C U I T O S ------------X
 DA BARRA      TENSAO GERACAO INJ EQV  CARGA   ELO CC  SHUNT    MOTOR
 NUM. KV TIPO   MOD/     MW/     MW/     MW/     MW/   Mvar/     MW/
     NOME       ANG     Mvar    Mvar    Mvar    Mvar   EQUIV    Mvar  PARA BARRA                    FLUXOS
                                              FLUXO % SHUNT L         NUM.     NOME     NC     MW    Mvar  MVA/V_d   TAP  DEFAS TIE
X------------X-------X-------X-------X-------X-------X-------X-------X----X------------X--X-------X-------X-------X------X-----X---X

 1713    1  0   1.003     0.0     0.0    19.3     0.0     0.0     0.0
 R.CIDADE2 69  -123.6     0.0     0.0     6.9     0.0     0.0     0.0
                                              13.8%                 1709 PIABANHA  69  1    -4.1     0.3     4.1
                                              38.9%                 1715 ITAMARATI 69  1   -15.2    -7.2    16.7
 1715    1  0   1.014     0.0     0.0    48.5     0.0     0.0     0.0
 ITAMARATI 69  -123.2     0.0     0.0    14.5     0.0     0.0     0.0
                                               4.0%                 1709 PIABANHA  69  1     0.0     1.8     1.7
                                               4.3%                 1709 PIABANHA  69  2    -0.1     1.9     1.8
                                              26.1%                 1712 R.CIDADE1 69  1    10.2     5.1    11.2
                                              38.8%                 1713 R.CIDADE2 69  1    15.3     7.3    16.7
                                              20.1%                 1718 MAGE      69  1    -8.5    -2.3     8.6
```

```
                                                 20.1%                1718 MAGE      69  2    -8.5    -2.3     8.6
                                                 20.1%                1718 MAGE      69  3    -8.5    -2.3     8.6
                                                 20.1%                1718 MAGE      69  4    -8.5    -2.3     8.6
                                                 79.7%                1756 RDC-ENTR. 69  1   -40.0   -21.1    44.6
 1717    1  0   1.012     0.0     0.0     0.0     0.0     0.0     0.0
 MAGE     138  -118.8     0.0     0.0     0.0     0.0     0.0     0.0
                                                 79.5%                 169 S.JOSE---138  1  -128.1    12.5   127.2              01
                                                 79.5%                 169 S.JOSE---138  2  -128.1    12.5   127.2              01
                                                 74.0%                 173 ADRIANO--138  1   -87.9    -9.0    87.3              01
                                                 74.0%                 173 ADRIANO--138  2   -87.9    -9.0    87.3              01
                                                 49.2%                 174 R.LEAO---138  1    58.6    -4.3    58.0              01
                                                 49.2%                 174 R.LEAO---138  2    58.6    -4.3    58.0              01
                                                 68.6%                1718 MAGE      69  1    56.1   -12.8    56.9 0.999*
                                                 68.6%                1718 MAGE      69  2    56.1   -12.8    56.9 0.999*
                                                 55.8%                1736 V.PEDRAS-138  1   118.8    18.5   118.8
                                                 39.0%                1739 ARSENAL  138  1    83.7     8.8    83.2
 1718    1  0   1.030     0.0     0.0    43.1     0.0    30.5     0.0
 MAGE      69  -122.4     0.0     0.0    14.0     0.0     0.0     0.0
                                                 19.9%                1715 ITAMARATI 69  1     8.6     2.1     8.6
                                                 19.9%                1715 ITAMARATI 69  2     8.6     2.1     8.6
                                                 19.9%                1715 ITAMARATI 69  3     8.6     2.1     8.6
                                                 19.9%                1715 ITAMARATI 69  4     8.6     2.1     8.6
                                                 68.5%                1717 MAGE     138  1   -56.1    16.6    56.9
                                                 68.5%                1717 MAGE     138  2   -56.1    16.6    56.9
                                                 32.1%                1719 ITAMBI 1  69  1    13.4    -4.6    13.8
                                                 22.3%                1720 ITAMBI 2  69  1     7.1    -6.8     9.6
                                                 22.3%                1720 ITAMBI 2  69  2     7.1    -6.8     9.6
                                                 22.8%                1721 GUAXINDIB 69  1     7.4    -6.9     9.8
 1719    1  0   1.023     0.0     0.0    16.2     0.0     0.0     0.0
 ITAMBI 1  69  -123.9     0.0     0.0     5.0     0.0     0.0     0.0
                                                 31.8%                1718 MAGE      69  1   -13.2     4.6    13.7
                                                 22.9%                1723 ALCANTARA 69  1    -3.0    -9.6     9.9
CEPEL - CENTRO DE PESQUISAS DE ENERGIA ELETRICA - PROGRAMA DE ANALISE DE REDES - V08MAR05A                          PAG. 190

ANUAL 06/07 * SETEMBRO 2006 PESADA S/SE 19H N/NE 19H * ANAT0 - FSE - C13
RELATORIO COMPLETO DO SISTEMA * AREA 10 * *             CERJ                *

X------------------ D A D O S  -  B A R R A -------------------------X------------- F L U X O S  -  C I R C U I T O S -------------X
 DA BARRA      TENSAO GERACAO INJ EQV  CARGA   ELO CC  SHUNT    MOTOR
 NUM. KV TIPO   MOD/     MW/     MW/     MW/     MW/   Mvar/     MW/
     NOME       ANG     Mvar    Mvar    Mvar    Mvar   EQUIV    Mvar  PARA BARRA                    FLUXOS
                                                FLUXO % SHUNT L         NUM.     NOME     NC     MW    Mvar  MVA/V_d   TAP  DEFAS TIE
X------------X-------X-------X-------X-------X-------X-------X-------X----X------------X--X-------X-------X-------X------X-----X---X

 1720    1  0   1.033     0.0     0.0     0.0     0.0     0.0     0.0
 ITAMBI 2  69  -123.5     0.0     0.0     0.0     0.0     0.0     0.0
                                                 21.8%                1718 MAGE      69  1    -7.0     6.7     9.4
                                                 21.8%                1718 MAGE      69  2    -7.0     6.7     9.4
                                                 21.8%                1723 ALCANTARA 69  1     7.0    -6.7     9.4
                                                 21.8%                1723 ALCANTARA 69  2     7.0    -6.7     9.4
 1721    1  0   1.034     0.0     0.0     0.1     0.0     0.0     0.0
 GUAXINDIB 69  -123.9     0.0     0.0     0.0     0.0     0.0     0.0
                                                 22.1%                1718 MAGE      69  1    -7.2     6.7     9.5
                                                 21.9%                1723 ALCANTARA 69  1     7.1    -6.7     9.4
 1723    1  0   1.035     0.0     0.0    11.9     0.0    30.8     0.0
 ALCANTARA 69  -124.1     0.0     0.0     3.8     0.0     0.0     0.0
                                                 22.5%                1719 ITAMBI 1  69  1     3.1     9.5     9.7
                                                 21.5%                1720 ITAMBI 2  69  1    -6.9     6.6     9.2
                                                 21.5%                1720 ITAMBI 2  69  2    -6.9     6.6     9.2
                                                 21.8%                1721 GUAXINDIB 69  1    -7.1     6.6     9.4
```

```
                                                  22.2%                 1724 ZONA SUL  69  1    16.0    -1.0    15.5
                                                  14.0%                 1725 S LOURENC 69  1    16.0    -1.0    15.5
                                                  23.9%                 1726 S.PONTES  69  1    27.3     2.4    26.5
                                                  31.2%                 1730 ALCANTARA138  1   -26.8    -1.3    25.9
                                                  31.1%                 1730 ALCANTARA138  2   -26.7    -1.3    25.8
 1724    1  0   1.030     0.0     0.0     0.0     0.0     0.0     0.0
 ZONA SUL  69  -125.4     0.0     0.0     0.0     0.0     0.0     0.0
                                                  22.2%                 1723 ALCANTARA 69  1   -15.9     1.1    15.5
                                                  14.0%                 1725 S LOURENC 69  1    15.9    -1.1    15.5
 1725    1  0   1.028     0.0     0.0    51.0     0.0    22.8     0.0
 S LOURENC 69  -125.8     0.0     0.0    19.8     0.0     0.0     0.0
                                                  14.0%                 1723 ALCANTARA 69  1   -15.9     1.1    15.5
                                                  14.0%                 1724 ZONA SUL  69  1   -15.9     1.1    15.5
                                                   8.4%                 1726 S.PONTES  69  1    -9.6     0.4     9.3
                                                   8.4%                 1726 S.PONTES  69  2    -9.6     0.4     9.3
 1726    1  0   1.028     0.0     0.0     0.0     0.0     0.0     0.0
 S.PONTES  69  -125.6     0.0     0.0     0.0     0.0     0.0     0.0
                                                  23.9%                 1723 ALCANTARA 69  1   -27.2    -1.9    26.5
                                                   8.4%                 1725 S LOURENC 69  1     9.6    -0.5     9.3
                                                   8.4%                 1725 S LOURENC 69  2     9.6    -0.5     9.3
                                                  17.2%                 1727 S.GONCALO 69  1     8.0     2.8     8.3
 1727    1  0   1.026     0.0     0.0     8.0     0.0     0.0     0.0
 S.GONCALO 69  -125.7     0.0     0.0     2.9     0.0     0.0     0.0
                                                  17.3%                 1726 S.PONTES  69  1    -8.0    -2.9     8.3
```



```
X----------------- D A D O S  -  B A R R A -------------------------X------------ F L U X O S  -  C I R C U I T O S ------------X
 DA BARRA      TENSAO GERACAO INJ EQV  CARGA   ELO CC  SHUNT    MOTOR
 NUM. KV TIPO   MOD/     MW/     MW/     MW/     MW/   Mvar/     MW/
     NOME       ANG     Mvar    Mvar    Mvar    Mvar   EQUIV    Mvar  PARA BARRA                    FLUXOS
                                                FLUXO % SHUNT L        NUM.     NOME     NC     MW    Mvar  MVA/V_d   TAP  DEFAS TIE
X------------X-------X-------X-------X-------X-------X-------X-------X----X------------X--X-------X-------X-------X------X-----X---X

 1728    1  0   0.994     0.0     0.0    19.2     0.0     0.0     0.0
 MACAE----138  -127.7     0.0     0.0     8.0     0.0     0.0     0.0
                                                  11.6%                  174 R.LEAO---138  1     0.0    13.6    13.7              01
                                                  24.7%                  175 CAMPOS---138  1   -19.2   -21.6    29.1              01
 1730    1  0   0.998     0.0     0.0    62.6     0.0    25.5     0.0
 ALCANTARA138  -122.5     0.0     0.0    25.9     0.0     0.0     0.0
                                                  61.3%                  173 ADRIANO--138  1   -89.1    -7.0    89.6              01
                                                  32.4%                 1723 ALCANTARA 69  1    26.8     2.1    26.9 0.963*
                                                  32.3%                 1723 ALCANTARA 69  2    26.7     2.1    26.8 0.963*
                                                  44.6%                 1731 GUAXINDIB138  1   -64.7    -6.2    65.1
                                                  38.3%                 1732 P.ROSA   138  1   -55.6    -6.0    56.0
                                                  27.5%                 1733 G.BRANCO 138  1    60.7     5.8    61.1
                                                  27.5%                 1733 G.BRANCO 138  2    60.7     5.8    61.1
                                                  22.8%                 1734 S.PONTES 138  1    49.9     7.5    50.5
                                                  53.5%                 1742 P.ANGEL 138   1   -77.9    -4.5    78.2
 1731    1  0   1.000     0.0     0.0    29.6     0.0     9.6     0.0
 GUAXINDIB138  -122.1     0.0     0.0    11.1     0.0     0.0     0.0
                                                  64.8%                  173 ADRIANO--138  1   -94.3    -7.8    94.6              01
                                                  44.5%                 1730 ALCANTARA138  1    64.7     6.3    65.0
 1732    1  0   1.000     0.0     0.0    42.6     0.0    17.6     0.0
 P.ROSA   138  -122.2     0.0     0.0    19.3     0.0     0.0     0.0
                                                  67.5%                  116 IMBARIE-TAP   1   -98.2    -7.7    98.5              01
                                                  38.3%                 1730 ALCANTARA138  1    55.6     6.0    55.9
 1733    1  0   0.996     0.0     0.0    43.1     0.0    25.4     0.0
```

```
 G.BRANCO 138  -122.9     0.0     0.0    18.3     0.0     0.0     0.0
                                              27.5%                 1730 ALCANTARA138  1   -60.6    -5.7    61.1
                                              27.5%                 1730 ALCANTARA138  2   -60.6    -5.7    61.1
                                              18.1%                 1734 S.PONTES 138  1    39.1     9.2    40.3
                                              18.1%                 1734 S.PONTES 138  2    39.1     9.2    40.3
 1734    1  0   0.995     0.0     0.0    69.8     0.0    27.7     0.0
 S.PONTES 138  -123.1     0.0     0.0    32.0     0.0     0.0     0.0
                                              22.8%                 1730 ALCANTARA138  1   -49.8    -7.5    50.6
                                              18.2%                 1733 G.BRANCO 138  1   -39.0    -9.4    40.4
                                              18.2%                 1733 G.BRANCO 138  2   -39.0    -9.4    40.4
                                              23.1%                 1735 INGA     138  1    32.8    12.7    35.4
                                              12.2%                 1737 ZONA SUL 138  1    25.2     9.3    27.0
 1735    1  0   0.992     0.0     0.0    20.0     0.0     0.0     0.0
 INGA     138  -123.4     0.0     0.0     9.7     0.0     0.0     0.0
                                              23.2%                 1734 S.PONTES 138  1   -32.8   -12.9    35.5
                                               8.7%                 1737 ZONA SUL 138  1    12.8     3.2    13.3
CEPEL - CENTRO DE PESQUISAS DE ENERGIA ELETRICA - PROGRAMA DE ANALISE DE REDES - V08MAR05A                              PAG. 192

ANUAL 06/07 * SETEMBRO 2006 PESADA S/SE 19H N/NE 19H * ANAT0 - FSE - C13
RELATORIO COMPLETO DO SISTEMA * AREA 10 * *             CERJ              *

X----------------- D A D O S  -  B A R R A -------------------------X------------ F L U X O S  -  C I R C U I T O S ------------X
 DA BARRA      TENSAO GERACAO INJ EQV  CARGA   ELO CC  SHUNT    MOTOR
 NUM. KV TIPO   MOD/     MW/     MW/     MW/     MW/   Mvar/     MW/
     NOME       ANG     Mvar    Mvar    Mvar    Mvar   EQUIV    Mvar  PARA BARRA                    FLUXOS
                                                FLUXO % SHUNT L         NUM.     NOME     NC     MW    Mvar  MVA/V_d   TAP  DEFAS TIE
X------------X-------X-------X-------X-------X-------X-------X-------X----X------------X--X-------X-------X-------X------X-----X---X

 1736    1  0   0.993     0.0     0.0    84.3     0.0    16.8     0.0
 V.PEDRAS-138  -122.3     0.0     0.0    34.6     0.0     0.0     0.0
                                              55.9%                 1717 MAGE     138  1  -117.5   -12.5   119.0
                                              15.9%                 1739 ARSENAL  138  1    33.2    -5.3    33.9
 1737    1  0   0.991     0.0     0.0    73.2     0.0    15.7     0.0
 ZONA SUL 138  -123.5     0.0     0.0    27.4     0.0     0.0     0.0
                                              12.2%                 1734 S.PONTES 138  1   -25.2    -9.2    27.0
                                               8.7%                 1735 INGA     138  1   -12.8    -3.5    13.4
                                              18.1%                 1738 ICARAI   138  1    20.8     0.2    21.0
                                              13.5%                 1738 ICARAI   138  2    18.6     0.1    18.8
                                              17.7%                 1739 ARSENAL  138  1   -37.4     0.3    37.7
                                              17.7%                 1739 ARSENAL  138  2   -37.3     0.4    37.6
 1738    1  0   0.990     0.0     0.0    39.4     0.0    15.7     0.0
 ICARAI   138  -123.6     0.0     0.0    16.2     0.0     0.0     0.0
                                              18.1%                 1737 ZONA SUL 138  1   -20.8    -0.1    21.0
                                              13.5%                 1737 ZONA SUL 138  2   -18.6    -0.4    18.8
 1739    1  0   0.992     0.0     0.0    40.9     0.0     9.5     0.0
 ARSENAL  138  -123.0     0.0     0.0    11.2     0.0     0.0     0.0
                                              39.1%                 1717 MAGE     138  1   -82.6    -5.1    83.4
                                              15.8%                 1736 V.PEDRAS-138  1   -33.1     4.7    33.7
                                              17.7%                 1737 ZONA SUL 138  1    37.4    -0.6    37.7
                                              17.7%                 1737 ZONA SUL 138  2    37.4    -0.7    37.6
 1740    1  0   1.016     0.0     0.0    48.3     0.0    12.4     0.0
 IMBARIE  138  -112.6     0.0     0.0    20.1     0.0     0.0     0.0
                                              55.3%                  172 IMBARIE--138  1   -48.3    -7.7    48.1                01
 1741    1  0   1.002     0.0     0.0    18.0     0.0     0.0     0.0
 INDUSTRIA138  -113.6     0.0     0.0     7.7     0.0     0.0     0.0
                                              17.8%                 3976 TERMORIO-138  1   -18.0    -7.7    19.5
 1742    1  0   1.021     0.0     0.0    28.7     0.0     0.0     0.0
 P.ANGEL 138   -117.5     0.0     0.0     9.2     0.0     0.0     0.0
                                              73.2%                  173 ADRIANO--138  1  -107.8   -17.3   106.9                01
                                              53.3%                 1730 ALCANTARA138  1    79.1     8.1    77.9
```

```
 1743    1  0   1.008     0.0     0.0    20.1     0.0     4.9     0.0
 C.ELISEOS--1  -113.2     0.0     0.0     7.0     0.0     0.0     0.0
                                              54.4%                 172 IMBARIE--138  1   -57.6   -17.8    59.8              01
                                              36.7%                1746 P.IND-3--138  1    37.5    15.6    40.3
 1744    1  0   1.007     0.0     0.0    23.4     0.0     4.9     0.0
 C.ELISEOS--2  -113.3     0.0     0.0     8.1     0.0     0.0     0.0
                                              57.7%                 172 IMBARIE--138  1   -61.0   -19.0    63.5              01
                                              36.8%                1748 P.IND-2--138  1    37.6    15.8    40.5
CEPEL - CENTRO DE PESQUISAS DE ENERGIA ELETRICA - PROGRAMA DE ANALISE DE REDES - V08MAR05A                              PAG. 193

ANUAL 06/07 * SETEMBRO 2006 PESADA S/SE 19H N/NE 19H * ANAT0 - FSE - C13
RELATORIO COMPLETO DO SISTEMA * AREA 10 * *              CERJ                *

X----------------- D A D O S  -  B A R R A ------------------------X------------ F L U X O S  -  C I R C U I T O S ------------X
 DA BARRA      TENSAO GERACAO INJ EQV  CARGA   ELO CC  SHUNT    MOTOR
 NUM. KV TIPO   MOD/     MW/     MW/     MW/     MW/   Mvar/     MW/
     NOME       ANG     Mvar    Mvar    Mvar    Mvar   EQUIV    Mvar  PARA BARRA                    FLUXOS
                                                FLUXO % SHUNT L        NUM.     NOME     NC     MW    Mvar  MVA/V_d   TAP  DEFAS TIE
X------------X-------X-------X-------X-------X-------X-------X-------X----X------------X--X-------X-------X-------X------X-----X---X

 1745    1  0   0.988     0.0     0.0   244.5     0.0    88.4     0.0
 R.LEAO   138  -127.8     0.0     0.0   100.1     0.0     0.0     0.0
                                              38.2%                 174 R.LEAO---138  1   -65.0   -12.1    66.9              01
                                              38.2%                 174 R.LEAO---138  2   -65.0   -12.1    66.9              01
                                              47.8%                1751 MACABU   138  1   -57.3     6.2    58.3
                                              47.8%                1751 MACABU   138  2   -57.3     6.2    58.3
 1746  138  0   1.003     0.0     0.0    19.5     0.0     0.0     0.0
 P.IND-3--138  -113.5     0.0     0.0     8.3     0.0     0.0     0.0
                                              36.8%                1743 C.ELISEOS--1  1   -37.4   -15.8    40.5
                                              17.6%                1747 POLO_IND.--1  1    17.9     7.5    19.4
 1747    1  0   1.002     0.0     0.0    17.9     0.0     0.0     0.0
 POLO_IND.--1  -113.6     0.0     0.0     7.6     0.0     0.0     0.0
                                              17.6%                1746 P.IND-3--138  1   -17.9    -7.6    19.4
                                               0.0%                1749 INDUST-1-138  1     0.0     0.0     0.0
 1748  138  0   1.002     0.0     0.0    19.5     0.0     0.0     0.0
 P.IND-2--138  -113.6     0.0     0.0     8.3     0.0     0.0     0.0
                                              37.0%                1744 C.ELISEOS--2  1   -37.5   -15.9    40.7
                                              17.7%                3976 TERMORIO-138  1    18.0     7.6    19.5
 1749  138  0   1.002     0.0     0.0     0.0     0.0     0.0     0.0
 INDUST-1-138  -113.6     0.0     0.0     0.0     0.0     0.0     0.0
                                               0.0%                1747 POLO_IND.--1  1     0.0     0.0     0.0
 1750    1  0   0.990     0.0     0.0    29.7     0.0     0.0     0.0
 MACABU    69  -127.2     0.0     0.0     9.3     0.0     0.0     0.0
                                              55.2%                1703 MACABU   3.0  1    -6.0     0.2     6.1
                                              81.1%                1704 MACABU   6.6  1   -12.0     0.9    12.2
                                              53.1%                1751 MACABU   138  1   -10.5    -0.2    10.6
                                              54.2%                1751 MACABU   138  2    -8.0    -0.2     8.1
                                              25.7%                1763 CMP.DIST. 69  1     3.4    -5.0     6.2
                                              25.7%                1763 CMP.DIST. 69  2     3.4    -5.0     6.2
 1751    1  0   1.002     0.0     0.0     0.0     0.0     0.0     0.0
 MACABU   138  -124.9     0.0     0.0     0.0     0.0     0.0     0.0
                                              47.9%                1745 R.LEAO   138  1    58.4    -5.5    58.5
                                              47.9%                1745 R.LEAO   138  2    58.4    -5.5    58.5
                                              52.5%                1750 MACABU    69  1    10.5     0.6    10.5 1.011*
                                              53.6%                1750 MACABU    69  2     8.0     0.5     8.0 1.011*
                                              18.5%                1752 FRIBURGO 138  1     8.4    13.8    16.1
                                              67.3%                1757 PALMAS   138  1   -63.1    14.8    64.7
                                              69.0%                1758 PALMAS-----2  1   -64.8    14.3    66.2
                                              19.4%                1759 MOMBACA  138  1    -0.1   -21.6    21.6
                                              19.5%                1760 UTEC     138  1    -0.4   -21.7    21.7
```

```
                                                 21.1%                 3343 CQT------138  1   -15.3    10.3    18.4                65
CEPEL - CENTRO DE PESQUISAS DE ENERGIA ELETRICA - PROGRAMA DE ANALISE DE REDES - V08MAR05A                                  PAG. 194

ANUAL 06/07 * SETEMBRO 2006 PESADA S/SE 19H N/NE 19H * ANAT0 - FSE - C13
RELATORIO COMPLETO DO SISTEMA * AREA 10 * *              CERJ                 *

X----------------- D A D O S  -  B A R R A -------------------------X------------ F L U X O S  -  C I R C U I T O S ------------X
 DA BARRA      TENSAO GERACAO INJ EQV  CARGA   ELO CC  SHUNT    MOTOR
 NUM. KV TIPO   MOD/     MW/     MW/     MW/     MW/   Mvar/     MW/
     NOME       ANG     Mvar    Mvar    Mvar    Mvar   EQUIV    Mvar  PARA BARRA                    FLUXOS
                                                FLUXO % SHUNT L         NUM.     NOME     NC     MW    Mvar  MVA/V_d   TAP  DEFAS TIE
X------------X-------X-------X-------X-------X-------X-------X-------X----X------------X--X-------X-------X-------X------X-----X---X

 1752    1  0   0.977     0.0     0.0     0.0     0.0     0.0     0.0
 FRIBURGO 138  -125.1     0.0     0.0     0.0     0.0     0.0     0.0
                                                21.8%                 1751 MACABU   138  1    -8.2   -16.6    19.0
                                                81.7%                 1753 FRIBURGO  69  1    26.0     4.0    27.0 0.944*
                                                80.9%                 1753 FRIBURGO  69  2    25.8     3.9    26.7 0.944*
                                                52.3%                 1754 TERESOPOL138  1   -43.6     8.7    45.5
 1753    1  0   1.030     0.0     0.0     0.0     0.0     0.0     0.0
 FRIBURGO  69  -127.1     0.0     0.0     0.0     0.0     0.0     0.0
                                                77.2%                 1752 FRIBURGO 138  1   -26.0    -3.1    25.5
                                                76.3%                 1752 FRIBURGO 138  2   -25.8    -3.0    25.2
                                                 0.5%                 3340 JAP-------69  1    51.8     6.1    50.7                65
 1754    1  0   0.987     0.0     0.0    51.9     0.0    16.0     0.0
 TERESOPOL138  -121.6     0.0     0.0    20.8     0.0     0.0     0.0
                                                53.0%                 1752 FRIBURGO 138  1    44.6    -9.0    46.1
                                                49.2%                 1755 RDC-ENTR.138  1   -58.5     9.1    60.0
                                                49.2%                 1755 RDC-ENTR.138  2   -58.5     9.1    60.0
                                                28.9%                 3343 CQT------138  1    20.5   -13.9    25.1                65
 1755    1  0   0.997     0.0     0.0     0.0     0.0     0.0     0.0
 RDC-ENTR.138  -119.2     0.0     0.0     0.0     0.0     0.0     0.0
                                                 5.5%                  258 I.POMBOS-138  1   -11.7   -10.4    15.7                09
                                                51.6%                  264  Tap-INMETRO  1  -147.7     2.0   148.2                09
                                                49.4%                 1754 TERESOPOL138  1    59.4    -8.3    60.2
                                                49.4%                 1754 TERESOPOL138  2    59.4    -8.3    60.2
                                                95.5%                 1756 RDC-ENTR. 69  1    20.3    12.5    23.9 0.933*
                                                95.5%                 1756 RDC-ENTR. 69  2    20.3    12.5    23.9 0.933*
 1756    1  0   1.035     0.0     0.0     0.0     0.0     0.0     0.0
 RDC-ENTR. 69  -122.3     0.0     0.0     0.0     0.0     0.0     0.0
                                                79.6%                 1715 ITAMARATI 69  1    40.5    22.1    44.6
                                                89.1%                 1755 RDC-ENTR.138  1   -20.3   -11.0    22.3
                                                89.1%                 1755 RDC-ENTR.138  2   -20.3   -11.0    22.3
 1757    1  0   1.012     0.0     0.0     6.0     0.0     0.0     0.0
 PALMAS   138  -121.5     0.0     0.0     2.6     0.0     0.0     0.0
                                                58.3%                  258 I.POMBOS-138  1   -70.5    10.8    70.5                09
                                                67.8%                 1751 MACABU   138  1    64.5   -13.4    65.1
 1758    1  0   1.013     0.0     0.0     2.7     0.0     0.0     0.0
 PALMAS-----2  -121.4     0.0     0.0     1.2     0.0     0.0     0.0
                                                57.1%                  258 I.POMBOS-138  1   -69.0    11.5    69.1                09
                                                69.4%                 1751 MACABU   138  1    66.3   -12.7    66.6
CEPEL - CENTRO DE PESQUISAS DE ENERGIA ELETRICA - PROGRAMA DE ANALISE DE REDES - V08MAR05A                                  PAG. 195

ANUAL 06/07 * SETEMBRO 2006 PESADA S/SE 19H N/NE 19H * ANAT0 - FSE - C13
RELATORIO COMPLETO DO SISTEMA * AREA 10 * *              CERJ                 *

X----------------- D A D O S  -  B A R R A -------------------------X------------ F L U X O S  -  C I R C U I T O S ------------X
 DA BARRA      TENSAO GERACAO INJ EQV  CARGA   ELO CC  SHUNT    MOTOR
 NUM. KV TIPO   MOD/     MW/     MW/     MW/     MW/   Mvar/     MW/
     NOME       ANG     Mvar    Mvar    Mvar    Mvar   EQUIV    Mvar  PARA BARRA                    FLUXOS
```

```
                                                   FLUXO % SHUNT L          NUM.     NOME     NC     MW    Mvar  MVA/V_d   TAP  DEFAS TIE
X------------X-------X-------X-------X-------X-------X-------X-------X----X------------X--X-------X-------X-------X------X-----X---X

 1759    1  0   1.048     0.0     0.0    22.3     0.0     0.0     0.0
 MOMBACA  138  -125.9     0.0     0.0     7.6     0.0     0.0     0.0
                                                  13.4%                 1751 MACABU   138  1     0.4    15.6    14.9
                                                  27.6%                 1760 UTEC     138  1   -22.7   -22.6    30.6
                                                   0.4%                 1762 CMP.DIST-138  1     0.0    -0.5     0.5
 1760  138  0   1.049     0.0     0.0     0.0     0.0     0.0     0.0
 UTEC     138  -125.9     0.0     0.0     0.0     0.0     0.0     0.0
                                                  80.4%                  175 CAMPOS---138  1   -94.4   -31.8    94.9              01
                                                  80.4%                  175 CAMPOS---138  2   -94.4   -31.8    94.9              01
                                                  70.5%                  200 UCAMPOS-FIC1  1    14.7     1.2    14.1              01
                                                  70.2%                  202 UCAMPOS-FIC2  1    14.7     1.3    14.0              01
                                                  13.4%                 1751 MACABU   138  1     0.8    15.6    14.9
                                                  27.5%                 1759 MOMBACA  138  1    22.7    22.6    30.5
                                            SUP  101.0%                 1761 UTEC      69  1    66.1    25.8    67.7 0.981F
                                                  34.6%                 1765 ITALVA   138  1    69.7    -2.8    66.5
 1761    1  0   1.045     0.0     0.0    35.6     0.0    14.5     0.0
 UTEC      69  -129.6     0.0     0.0    15.8     0.0     0.0     0.0
                                                  82.7%                  200 UCAMPOS-FIC1  1   -16.6     4.9    16.5              01
                                                  64.7%                  202 UCAMPOS-FIC2  1   -13.5    -0.3    12.9              01
                                                  99.1%                 1760 UTEC     138  1   -66.1   -21.0    66.4
                                            SUP  106.8%                 1763 CMP.DIST. 69  1    30.3     7.6    29.9
                                            SUP  106.8%                 1763 CMP.DIST. 69  2    30.3     7.6    29.9
 1762    1  0   1.048     0.0     0.0     0.0     0.0     0.0     0.0
 CMP.DIST-138  -125.9     0.0     0.0     0.0     0.0     0.0     0.0
                                                   0.0%                 1759 MOMBACA  138  1     0.0     0.0     0.0
 1763    1  0   1.010     0.0     0.0    65.3     0.0    21.3     0.0
 CMP.DIST. 69  -131.1     0.0     0.0    27.2     0.0     0.0     0.0
                                                  20.4%                 1750 MACABU    69  1    -3.2     3.8     4.9
                                                  20.4%                 1750 MACABU    69  2    -3.2     3.8     4.9
                                            SUP  106.9%                 1761 UTEC      69  1   -29.5    -6.7    29.9
                                            SUP  106.9%                 1761 UTEC      69  2   -29.5    -6.7    29.9
 1765    1  0   1.028     0.0     0.0     0.0     0.0     0.0     0.0
 ITALVA   138  -128.8     0.0     0.0     0.0     0.0     0.0     0.0
                                                  34.6%                 1760 UTEC     138  1   -68.3    -2.7    66.5
                                                  41.5%                 1766 ITALVA    69  1    34.2     1.3    33.2 0.992*
                                                  45.5%                 1766 ITALVA    69  2    34.2     1.3    33.2 0.992*
 1766    1  0   1.036     4.8     0.0    73.1     0.0    27.0     0.0
 ITALVA    69  -130.7     0.0     0.0    27.4     0.0     0.0     0.0
                                                  41.2%                 1765 ITALVA   138  1   -34.2    -0.2    33.0
                                                  45.2%                 1765 ITALVA   138  2   -34.2    -0.2    33.0
```



```
X----------------- D A D O S  -  B A R R A ------------------------X------------ F L U X O S  -  C I R C U I T O S ------------X
 DA BARRA      TENSAO GERACAO INJ EQV  CARGA   ELO CC  SHUNT    MOTOR
 NUM. KV TIPO   MOD/     MW/     MW/     MW/     MW/   Mvar/     MW/
     NOME       ANG     Mvar    Mvar    Mvar    Mvar   EQUIV    Mvar  PARA BARRA                    FLUXOS
                                                   FLUXO % SHUNT L          NUM.     NOME     NC     MW    Mvar  MVA/V_d   TAP  DEFAS TIE
X------------X-------X-------X-------X-------X-------X-------X-------X----X------------X--X-------X-------X-------X------X-----X---X

 1770    1  0   1.011     0.0     0.0    15.0     0.0     0.0     0.0
 MURIQUI  138  -112.6     0.0     0.0     4.0     0.0     0.0     0.0
                                                  44.8%                  276 BRISAMAR-138  1    42.2   -12.4    43.5              09
                                                  58.9%                 1773 ANGRA    138  1   -57.2     8.4    57.1
 1771    1  0   1.021     0.0     0.0    17.8     0.0     0.0     0.0
```

```
 JACUACANG138  -110.0     0.0     0.0     5.9     0.0     0.0     0.0
                                                70.4%                 185 ANGRA----138  1   -84.6    -5.0    83.0              01
                                                55.5%                 276 BRISAMAR-138  1    66.8    -0.9    65.4              09
 1772    1  0   1.038     0.0     0.0    18.8     0.0     1.1     0.0
 ITAORNA  138  -106.2     0.0     0.0     7.8     0.0     0.0     0.0
                                                43.7%                 185 ANGRA----138  1   -18.8    -6.7    19.2              01
 1773    1  0   1.020     0.0     0.0    20.7     0.0     0.0     0.0
 ANGRA    138  -109.4     0.0     0.0     7.0     0.0     0.0     0.0
                                                79.7%                 185 ANGRA----138  1   -78.8     0.6    77.3              01
                                                59.2%                1770 MURIQUI  138  1    58.1    -7.6    57.5
 1780    1  0   0.967     0.0     0.0    89.0     0.0     0.0     0.0
 RESENDE  138  -111.2     0.0     0.0    32.0     0.0     0.0     0.0
                                                56.9%                1619 R.SAUDOSO138  1   -89.0   -32.0    97.9              09
 3976    1  0   1.002     0.0     0.0     0.0     0.0     0.0     0.0
 TERMORIO-138  -113.6     0.0     0.0     0.0     0.0     0.0     0.0
                                                17.8%                1741 INDUSTRIA138  1    18.0     7.7    19.5
                                                17.8%                1748 P.IND-2--138  1   -18.0    -7.7    19.5


TOTAIS DA AREA 10


X--------X--------X--------X--------X--------X--------X--------X--------X
  GERACAO  INJ EQV   CARGA   ELO CC    SHUNT   EXPORT   IMPORT   PERDAS
    MW/      MW/      MW/      MW/     Mvar/     MW/      MW/      MW/
   Mvar     Mvar     Mvar     Mvar     EQUIV    Mvar     Mvar     Mvar
X--------X--------X--------X--------X--------X--------X--------X--------X

     56.0      0.0   1649.6      0.0    438.1    327.9   1945.1     23.5
      2.0      0.0    636.6      0.0      0.0     86.5    298.0     15.0
CEPEL - CENTRO DE PESQUISAS DE ENERGIA ELETRICA - PROGRAMA DE ANALISE DE REDES - V08MAR05A                                PAG. 197

ANUAL 06/07 * SETEMBRO 2006 PESADA S/SE 19H N/NE 19H * ANAT0 - FSE - C13
RELATORIO COMPLETO DO SISTEMA * AREA 11 * *             ESCELSA             *

X----------------- D A D O S  -  B A R R A ------------------------X------------ F L U X O S  -  C I R C U I T O S ------------X
 DA BARRA      TENSAO GERACAO INJ EQV  CARGA   ELO CC  SHUNT    MOTOR
 NUM. KV TIPO   MOD/     MW/     MW/     MW/     MW/   Mvar/     MW/
     NOME       ANG     Mvar    Mvar    Mvar    Mvar   EQUIV    Mvar  PARA BARRA                    FLUXOS
                                                FLUXO % SHUNT L         NUM.     NOME     NC     MW    Mvar  MVA/V_d   TAP  DEFAS TIE
X------------X-------X-------X-------X-------X-------X-------X-------X----X------------X--X-------X-------X-------X------X-----X---X

   91    1  0   1.041     0.0     0.0     0.0     0.0     0.0     0.0
 AREINHA-T-13  -138.0     0.0     0.0     0.0     0.0     0.0     0.0
                                                 0.0%                 2608 AREINH-1-FIC  1     0.0     0.0     0.0 1.000F
   95    1  0   1.041     0.0     0.0     0.0     0.0     0.0     0.0
 AREINHA-T-13  -138.0     0.0     0.0     0.0     0.0     0.0     0.0
                                                 0.0%                 2618 AREINH-2-FIC  1     0.0     0.0     0.0 1.000F
 2600   14  1   0.980    85.0     0.0     5.8     0.0     0.0     0.0
 MASCAREN-3GR  -137.9   -17.2     0.0     0.0     0.0     0.0     0.0
                                                62.2%                 2655 MASCAR.--138  1    79.2   -17.2    82.7
 2601    1  1   0.970    12.0     0.0     0.0     0.0     0.0     0.0
 SUICA----1MQ  -136.1    -0.4     0.0     0.0     0.0     0.0     0.0
                                                33.5%                 2680 SUICA----138  1    12.0    -0.4    12.4
 2602    1  1   0.970     4.5     0.0     0.0     0.0     0.0     0.0
 RBONITO--1MQ  -140.7     0.3     0.0     0.0     0.0     0.0     0.0
                                                19.4%                 2672 R.BONITO--69  1     4.5     0.3     4.6
 2603   14  0   0.979     0.0     0.0     0.0     0.0     0.0     0.0
 CARAPIN-13-1  -144.7     0.0     0.0     0.0     0.0     0.0     0.0
```

```
                                                  0.0%                 2691 FICT-CARAP-1  1     0.0     0.0     0.0 1.000F
 2604  138  0   1.001     0.0     0.0     4.0     0.0     0.0     0.0
 BRAGUSSA-138  -146.9     0.0     0.0     1.7     0.0     0.0     0.0
                                                  3.2%                 2605 BRAGUSSA-TAP  1    -4.0    -1.7     4.3
 2605  138  0   1.001     0.0     0.0     0.0     0.0     0.0     0.0
 BRAGUSSA-TAP  -146.9     0.0     0.0     0.0     0.0     0.0     0.0
                                                  3.2%                 2604 BRAGUSSA-138  1     4.0     1.6     4.3
                                                 20.1%                 2612 ARCEL----138  1    32.9     0.7    32.9
                                                 22.5%                 2645 J.NEIVA--138  1   -36.9    -2.3    37.0
 2606  138  0   1.021     0.0     0.0     0.0     0.0     0.0     0.0
 BOAPABA--138  -143.9     0.0     0.0     0.0     0.0     0.0     0.0
                                                 70.4%                 2607 BOAPABA---69  1    24.5     8.3    25.4
                                                 14.0%                 2645 J.NEIVA--138  1    26.5    -0.2    26.0
                                                 27.2%                 2655 MASCAR.--138  1   -51.1    -8.1    50.6
 2607   69  0   1.046     0.0     0.0     0.0     0.0     0.0     0.0
 BOAPABA---69  -149.2     0.0     0.0     0.0     0.0     0.0     0.0
                                                 67.0%                 2606 BOAPABA--138  1   -24.5    -5.8    24.1 1.052F
                                                 35.4%                 2627 2 VENDAS--69  1    12.7     2.8    12.4
                                                 24.4%                 2627 2 VENDAS--69  2    11.9     3.1    11.7
CEPEL - CENTRO DE PESQUISAS DE ENERGIA ELETRICA - PROGRAMA DE ANALISE DE REDES - V08MAR05A                          PAG. 198

ANUAL 06/07 * SETEMBRO 2006 PESADA S/SE 19H N/NE 19H * ANAT0 - FSE - C13
RELATORIO COMPLETO DO SISTEMA * AREA 11 * *             ESCELSA             *

X----------------- D A D O S  -  B A R R A ------------------------X------------ F L U X O S  -  C I R C U I T O S ------------X
 DA BARRA      TENSAO GERACAO INJ EQV  CARGA   ELO CC  SHUNT    MOTOR
 NUM. KV TIPO   MOD/     MW/     MW/     MW/     MW/   Mvar/     MW/
     NOME       ANG     Mvar    Mvar    Mvar    Mvar   EQUIV    Mvar  PARA BARRA                    FLUXOS
                                                FLUXO % SHUNT L         NUM.     NOME     NC     MW    Mvar  MVA/V_d   TAP  DEFAS TIE
X------------X-------X-------X-------X-------X-------X-------X-------X----X------------X--X-------X-------X-------X------X-----X---X

 2608    1  0   1.041     0.0     0.0     0.0     0.0     0.0     0.0
 AREINH-1-FIC  -138.0     0.0     0.0     0.0     0.0     0.0     0.0
                                                 63.0%                   90 AREINHA--345  1  -146.2    20.8   141.8                01
                                                  0.0%                   91 AREINHA-T-13  1     0.0     0.0     0.0
                                                 63.0%                 2619 AREINHA--138  1   146.2   -20.8   141.8
 2609  138  0   1.029     0.0     0.0     0.0     0.0     0.0     0.0
 A.LAGE---138  -138.5     0.0     0.0     0.0     0.0     0.0     0.0
                                                 21.1%                 2610 ALAGE-1-34.5  1    16.5    -7.1    17.5
                                                 37.8%                 2610 ALAGE-1-34.5  2    16.4    -7.1    17.4
                                                 24.8%                 2611 ALAGE-2-34.5  1     8.6     3.9     9.2
                                                 50.9%                 2611 ALAGE-2-34.5  2     8.6     3.9     9.2
                                                 24.4%                 2619 AREINHA--138  1   -41.7     3.6    40.7
                                                  4.6%                 2620 CARAPINA-138  1    -6.5     4.1     7.5
                                                  4.6%                 2620 CARAPINA-138  2    -6.5     4.1     7.5
                                                  4.1%                 2622 CEASA----138  1    -7.3    -6.2     9.3
                                                 27.7%                 2626 CARIACICA138  1    36.1    -2.4    35.1
                                                 12.9%                 2630 TAP-ALCE-138  1   -24.1     3.3    23.6
 2610   35  0   0.988     0.0     0.0    32.9     0.0    21.1     0.0
 ALAGE-1-34.5  -141.8     0.0     0.0     4.5     0.0     0.0     0.0
                                                 22.5%                 2609 A.LAGE---138  1   -16.5     8.3    18.7 0.935*
                                                 40.4%                 2609 A.LAGE---138  2   -16.4     8.3    18.6 0.935*
 2611   35  0   1.015     0.0     0.0    17.2     0.0     0.0     0.0
 ALAGE-2-34.5  -142.3     0.0     0.0     6.4     0.0     0.0     0.0
                                                 24.4%                 2609 A.LAGE---138  1    -8.6    -3.2     9.0 1.014*
                                                 50.2%                 2609 A.LAGE---138  2    -8.6    -3.2     9.0 1.014*
 2612  138  0   1.001     0.0     0.0    69.8     0.0    26.7     0.0
 ARCEL----138  -146.9     0.0     0.0    29.8     0.0     0.0     0.0
                                                 20.1%                 2605 BRAGUSSA-TAP  1   -32.9    -0.7    32.9
                                                 22.5%                 2645 J.NEIVA--138  1   -36.9    -2.3    36.9
```

```
 2613  138  0   1.027     0.0     0.0    41.4     0.0    28.2     0.0
 BFERREIR-138  -139.2     0.0     0.0    15.9     0.0     0.0     0.0
                                                11.5%                 2638 IBES     138  1   -20.7     6.1    21.0
                                                11.5%                 2638 IBES     138  2   -20.7     6.1    21.0
CEPEL - CENTRO DE PESQUISAS DE ENERGIA ELETRICA - PROGRAMA DE ANALISE DE REDES - V08MAR05A                          PAG. 199

ANUAL 06/07 * SETEMBRO 2006 PESADA S/SE 19H N/NE 19H * ANAT0 - FSE - C13
RELATORIO COMPLETO DO SISTEMA * AREA 11 * *             ESCELSA              *

X----------------- D A D O S  -  B A R R A ------------------------X------------ F L U X O S  -  C I R C U I T O S ------------X
 DA BARRA      TENSAO GERACAO INJ EQV  CARGA   ELO CC  SHUNT    MOTOR
 NUM. KV TIPO   MOD/     MW/     MW/     MW/     MW/   Mvar/     MW/
     NOME       ANG     Mvar    Mvar    Mvar    Mvar   EQUIV    Mvar  PARA BARRA                    FLUXOS
                                                FLUXO % SHUNT L         NUM.     NOME     NC     MW    Mvar  MVA/V_d   TAP  DEFAS TIE
X------------X-------X-------X-------X-------X-------X-------X-------X----X------------X--X-------X-------X-------X------X-----X---X

 2614  138  0   1.030     0.0     0.0     0.0     0.0    28.3     0.0
 CACHOEIRO138  -136.7     0.0     0.0     0.0     0.0     0.0     0.0
                                                62.1%                  175 CAMPOS---138  1   -74.3    13.2    73.3                01
                                                62.1%                  175 CAMPOS---138  2   -74.3    13.2    73.3                01
                                                14.7%                 2615 CACHOEIRO-69  1     4.8    14.4    14.7
                                                29.4%                 2615 CACHOEIRO-69  2     4.8    14.3    14.7
                                                14.0%                 2635 GUARAP.T-138  1    22.9    -8.5    23.7
                                                21.2%                 2639 TAP-ITAPEMIR  1    29.4    -9.9    30.2
                                                14.0%                 2660 TAP-LAMEIRAO  1    22.9    -8.5    23.7
                                                36.4%                 2663 TAP1--V.RICA  1    36.9    12.6    37.8
                                                 0.8%                 2669 TAP2--V.RICA  1     0.9    -0.1     0.9
                                                70.0%                 2697 FICT-CACH--1  1    26.1   -12.3    28.0 1.069*
 2615   69  0   1.038     0.0     0.0    13.3     0.0     0.0     0.0
 CACHOEIRO-69  -137.5     0.0     0.0     0.0     0.0     0.0     0.0
                                                14.0%                 2614 CACHOEIRO138  1    -4.8   -13.8    14.0 1.050F
                                                28.0%                 2614 CACHOEIRO138  2    -4.8   -13.7    14.0 1.050F
                                                24.0%                 2686 BRAMINEX--69  1    -8.5     9.1    12.0
                                                30.5%                 2688 MARMORE---69  1     4.8    18.4    18.3
 2616   35  0   1.007     0.0     0.0    15.8     0.0    16.4     0.0
 CACH----34.5  -141.2     0.0     0.0     1.3     0.0     0.0     0.0
                                                54.3%                 2697 FICT-CACH--1  1   -15.8    15.1    21.7 1.004F
 2617    1  0   1.006     0.0     0.0    10.3     0.0     0.0     0.0
 CACH----13.8  -142.4     0.0     0.0     0.0     0.0     0.0     0.0
                                                73.1%                 2697 FICT-CACH--1  1   -10.3     0.0    10.2 1.000F
 2618    1  0   1.041     0.0     0.0     0.0     0.0     0.0     0.0
 AREINH-2-FIC  -138.0     0.0     0.0     0.0     0.0     0.0     0.0
                                                63.0%                   90 AREINHA--345  1  -146.2    20.8   141.8                01
                                                 0.0%                   95 AREINHA-T-13  1     0.0     0.0     0.0
                                                63.0%                 2619 AREINHA--138  1   146.2   -20.8   141.8
 2619  138  0   1.030     0.0     0.0     0.0     0.0     0.0     0.0
 AREINHA--138  -137.9     0.0     0.0     0.0     0.0     0.0     0.0
                                                63.7%                 2608 AREINH-1-FIC  1  -146.2    20.5   143.3 0.990*
                                                24.4%                 2609 A.LAGE---138  1    41.8    -3.9    40.8
                                                63.7%                 2618 AREINH-2-FIC  1  -146.2    20.5   143.3 0.990*
                                                52.0%                 2622 CEASA----138  1    88.4   -14.5    86.9
                                                15.9%                 2635 GUARAP.T-138  1    26.0    -8.3    26.5
                                                15.9%                 2635 GUARAP.T-138  2    26.0    -8.3    26.5
                                                32.1%                 2638 IBES     138  1    55.1    -2.9    53.5
                                                32.0%                 2638 IBES     138  2    55.0    -2.9    53.5
CEPEL - CENTRO DE PESQUISAS DE ENERGIA ELETRICA - PROGRAMA DE ANALISE DE REDES - V08MAR05A                          PAG. 200

ANUAL 06/07 * SETEMBRO 2006 PESADA S/SE 19H N/NE 19H * ANAT0 - FSE - C13
RELATORIO COMPLETO DO SISTEMA * AREA 11 * *             ESCELSA              *
```

```
X----------------- D A D O S  -  B A R R A -------------------------X------------ F L U X O S  -  C I R C U I T O S ------------X
 DA BARRA      TENSAO GERACAO INJ EQV  CARGA   ELO CC  SHUNT    MOTOR
 NUM. KV TIPO   MOD/     MW/     MW/     MW/     MW/   Mvar/     MW/
     NOME       ANG     Mvar    Mvar    Mvar    Mvar   EQUIV    Mvar  PARA BARRA                    FLUXOS
                                                FLUXO % SHUNT L        NUM.     NOME     NC     MW    Mvar  MVA/V_d   TAP  DEFAS TIE
X------------X-------X-------X-------X-------X-------X-------X-------X----X------------X--X-------X-------X-------X------X-----X---X

 2620  138  0   1.028     0.0     0.0     0.0     0.0    82.8     0.0
 CARAPINA-138  -138.2     0.0     0.0     0.0     0.0     0.0     0.0
                                                 5.1%                  2609 A.LAGE---138  1     6.5    -5.5     8.3
                                                 5.1%                  2609 A.LAGE---138  2     6.5    -5.5     8.3
                                                61.3%                  2624 CIVIT----138  1   118.4     4.4   115.3
                                                43.5%                  2649 FIESA----138  1    82.5   -10.6    81.0
                                                47.2%                  2666 PITANGA--138  1  -123.1   -13.0   120.4
                                                47.2%                  2666 PITANGA--138  2  -123.1   -13.0   120.4
                                                45.2%                  2666 PITANGA--138  3  -139.0    -2.6   135.3
                                                45.2%                  2666 PITANGA--138  4  -139.0    -2.6   135.3
                                                43.4%                  2682 TUBARAO138-1  1    67.2    29.0    71.2
                                                54.0%                  2683 TUBARAO138-2  1    83.4    36.3    88.5
                                                55.0%                  2684 TUBARAR3-138  2    94.6    41.6   100.6
                                                88.9%                  2691 FICT-CARAP-1  1    35.3     9.4    35.5 1.025F
                                                80.6%                  2692 FICT-CARAP-2  1    29.6    14.9    32.2 1.025F
 2621   35  0   1.032     0.0     0.0    35.3     0.0     0.0     0.0
 CARAP-1-34.5  -144.1     0.0     0.0     5.6     0.0     0.0     0.0
                                                86.6%                  2691 FICT-CARAP-1  1   -35.3    -5.6    34.6 1.052F
 2622  138  0   1.030     1.0     0.0    56.4     0.0    28.3     0.0
 CEASA----138  -138.4     0.0     0.0     9.9     0.0     0.0     0.0
                                                 4.0%                  2609 A.LAGE---138  1     7.3     5.9     9.1
                                                52.0%                  2619 AREINHA--138  1   -88.2    15.0    86.9
                                                 0.0%                  2630 TAP-ALCE-138  1     0.0     0.0     0.0
                                                14.9%                  2680 SUICA----138  1    25.4    -2.5    24.8
 2623  138 -1   1.008    17.0     0.0    41.4     0.0     0.0     0.0
 CASTELO--138  -138.0     0.0     0.0    13.7     0.0     0.0     0.0
                                                20.7%                  2631 FRUTEIRA-138  1   -24.4   -13.7    27.8
 2624  138  0   1.020     0.0     0.0    53.0     0.0     0.0     0.0
 CIVIT----138  -139.7     0.0     0.0    15.7     0.0     0.0     0.0
                                                61.3%                  2620 CARAPINA-138  1  -117.5    -2.1   115.3
                                                34.8%                  2645 J.NEIVA--138  1    64.5   -13.6    64.7
 2625  138  0   1.026     0.0     0.0    12.6     0.0     0.0     0.0
 BMINEIRA-138  -138.0     0.0     0.0     5.4     0.0     0.0     0.0
                                                 8.0%                  2666 PITANGA--138  1   -12.6    -5.4    13.4
 2626  138  0   1.026     0.0     0.0    19.7     0.0     0.0     0.0
 CARIACICA138  -138.8     0.0     0.0     4.6     0.0     0.0     0.0
                                                27.6%                  2609 A.LAGE---138  1   -36.0     2.1    35.1
                                                13.5%                  2680 SUICA----138  1    16.3    -6.7    17.1
```





```
X----------------- D A D O S  -  B A R R A -------------------------X------------ F L U X O S  -  C I R C U I T O S ------------X
 DA BARRA      TENSAO GERACAO INJ EQV  CARGA   ELO CC  SHUNT    MOTOR
 NUM. KV TIPO   MOD/     MW/     MW/     MW/     MW/   Mvar/     MW/
     NOME       ANG     Mvar    Mvar    Mvar    Mvar   EQUIV    Mvar  PARA BARRA                    FLUXOS
                                                FLUXO % SHUNT L        NUM.     NOME     NC     MW    Mvar  MVA/V_d   TAP  DEFAS TIE
X------------X-------X-------X-------X-------X-------X-------X-------X----X------------X--X-------X-------X-------X------X-----X---X

 2627   69  0   1.036     0.0     0.0    31.7     0.0     0.0     0.0
 2 VENDAS--69  -149.6     0.0     0.0     4.5     0.0     0.0     0.0
                                                35.4%                  2607 BOAPABA---69  1   -12.6    -2.8    12.4
```

```
                                                  24.5%                 2607 BOAPABA---69  2   -11.8    -3.1    11.8
                                                  19.5%                 2646 J.NEIVA---69  1    -7.3     1.4     7.2
 2628  138  0   1.024     0.0     0.0     0.0     0.0     0.0     0.0
 GOIABEIRA138  -138.3     0.0     0.0     0.0     0.0     0.0     0.0
                                                   0.0%                 2636 GOIA1-TAP138  1     0.0     0.0     0.0
                                                   0.0%                 2637 GOIA2-TAP138  1     0.0     0.0     0.0
 2629  138  0   1.031     0.0     0.0     0.0     0.0     0.0     0.0
 CST------138  -137.7     0.0     0.0     0.0     0.0     0.0     0.0
                                                   0.0%                 2666 PITANGA--138  1     0.0     0.0     0.0
                                                   0.0%                 2666 PITANGA--138  2     0.0     0.0     0.0
 2630  138  0   1.029     0.0     0.0     0.0     0.0     0.0     0.0
 TAP-ALCE-138  -138.4     0.0     0.0     0.0     0.0     0.0     0.0
                                                  12.9%                 2609 A.LAGE---138  1    24.1    -3.4    23.6
                                                   0.0%                 2622 CEASA----138  1     0.0     0.0     0.0
                                                   1.5%                 2662 BELGO-LAMINA  1     2.4     0.7     2.4
                                                  15.5%                 2666 PITANGA--138  1   -26.5     2.6    25.9
 2631  138  0   1.017     2.0     0.0    14.1     0.0     0.0     0.0
 FRUTEIRA-138  -137.5     0.0     0.0     0.0     0.0     0.0     0.0
                                                  20.4%                 2623 CASTELO--138  1    24.5    13.1    27.3
                                                  36.7%                 2663 TAP1--V.RICA  1   -36.6   -13.1    38.2
 2632   69  0   1.024     0.0     0.0     3.1     0.0     0.0     0.0
 FUNDAO----69  -147.0     0.0     0.0     1.8     0.0     0.0     0.0
                                                  10.9%                 2633 TAP---FUNDAO  1    -3.1    -1.8     3.5
 2633   69  0   1.024     0.0     0.0     0.0     0.0     0.0     0.0
 TAP---FUNDAO  -147.0     0.0     0.0     0.0     0.0     0.0     0.0
                                                  10.9%                 2632 FUNDAO----69  1     3.1     1.8     3.5
                                                  27.3%                 2646 J.NEIVA---69  1    -1.2    -8.9     8.7
                                                  22.3%                 2679 S.TEREZA--69  1    -1.9     7.1     7.1
 2635  138  0   1.031     0.0     0.0    30.9     0.0    56.8     0.0
 GUARAP.T-138  -139.0     0.0     0.0     0.4     0.0     0.0     0.0
                                                  13.2%                 2614 CACHOEIRO138  1   -22.6     4.5    22.4
                                                  15.5%                 2619 AREINHA--138  1   -25.9     6.7    26.0
                                                  15.5%                 2619 AREINHA--138  2   -25.9     6.7    26.0
                                                   5.1%                 2656 UHE-SJOAQ138  1    -6.1     4.4     7.2
                                                  13.2%                 2660 TAP-LAMEIRAO  1   -22.6     4.5    22.4
                                                  26.6%                 2674 SAMARCO--138  1    36.1    14.8    37.8
                                                  26.6%                 2674 SAMARCO--138  2    36.1    14.8    37.8
CEPEL - CENTRO DE PESQUISAS DE ENERGIA ELETRICA - PROGRAMA DE ANALISE DE REDES - V08MAR05A                          PAG. 202

ANUAL 06/07 * SETEMBRO 2006 PESADA S/SE 19H N/NE 19H * ANAT0 - FSE - C13
RELATORIO COMPLETO DO SISTEMA * AREA 11 * *             ESCELSA             *

X----------------- D A D O S  -  B A R R A -------------------------X------------ F L U X O S  -  C I R C U I T O S ------------X
 DA BARRA      TENSAO GERACAO INJ EQV  CARGA   ELO CC  SHUNT    MOTOR
 NUM. KV TIPO   MOD/     MW/     MW/     MW/     MW/   Mvar/     MW/
     NOME       ANG     Mvar    Mvar    Mvar    Mvar   EQUIV    Mvar  PARA BARRA                    FLUXOS
                                                FLUXO % SHUNT L        NUM.     NOME     NC     MW    Mvar  MVA/V_d   TAP  DEFAS TIE
X------------X-------X-------X-------X-------X-------X-------X-------X----X------------X--X-------X-------X-------X------X-----X---X

 2636  138  0   1.024     0.0     0.0     0.0     0.0     0.0     0.0
 GOIA1-TAP138  -138.3     0.0     0.0     0.0     0.0     0.0     0.0
                                                   0.0%                 2628 GOIABEIRA138  1     0.0     0.0     0.0
                                                  28.3%                 2666 PITANGA--138  1   -42.0   -10.2    42.2
                                                  28.3%                 2667 PRAIA----138  1    42.0    10.3    42.2
 2637  138  0   1.024     0.0     0.0     0.0     0.0     0.0     0.0
 GOIA2-TAP138  -138.3     0.0     0.0     0.0     0.0     0.0     0.0
                                                   0.0%                 2628 GOIABEIRA138  1     0.0     0.0     0.0
                                                  28.3%                 2666 PITANGA--138  1   -42.0   -10.2    42.2
                                                  35.2%                 2667 PRAIA----138  1    42.0    10.2    42.2
 2638  138  0   1.027     0.0     0.0    68.2     0.0     0.0     0.0
```

```
 IBES     138  -138.9     0.0     0.0     7.8     0.0     0.0     0.0
                                                 11.6%                 2613 BFERREIR-138  1    20.7    -6.8    21.3
                                                 11.6%                 2613 BFERREIR-138  2    20.7    -6.8    21.3
                                                 32.0%                 2619 AREINHA--138  1   -54.9     2.9    53.5
                                                 32.0%                 2619 AREINHA--138  2   -54.8     2.9    53.4
 2639  138  0   1.028     0.0     0.0     0.0     0.0     0.0     0.0
 TAP-ITAPEMIR  -137.6     0.0     0.0     0.0     0.0     0.0     0.0
                                                 21.0%                 2614 CACHOEIRO138  1   -29.2     9.2    29.8
                                                  8.2%                 2640 ITAPEMIR-138  1     8.8    -0.6     8.6
                                                 15.2%                 2665 PIUMA----138  1    20.4    -8.6    21.5
 2640  138  0   1.025     0.0     0.0     8.8     0.0     0.0     0.0
 ITAPEMIR-138  -137.9     0.0     0.0     0.8     0.0     0.0     0.0
                                                  8.2%                 2639 TAP-ITAPEMIR  1    -8.8    -0.8     8.6
 2641  138  0   1.030     0.0     0.0     0.9     0.0     0.0     0.0
 ITABIRA-138   -136.7     0.0     0.0     0.4     0.0     0.0     0.0
                                                  0.9%                 2669 TAP2--V.RICA  1    -0.9    -0.4     1.0
 2642   69  0   1.015     0.0     0.0    20.9     0.0     0.0     0.0
 ITARANA---69  -145.9     0.0     0.0     6.0     0.0     0.0     0.0
                                                 49.1%                 2652 ITARANA--138  1   -26.9    -7.5    27.5 1.017*
                                                 19.0%                 2677 S.MARIA--TAP  1     6.0     1.5     6.1
 2643  138  0   1.004     0.0     0.0     0.0     0.0     0.0     0.0
 JAGUARE--TAP  -153.7     0.0     0.0     0.0     0.0     0.0     0.0
                                                 20.8%                 2644 JAGUARE--138  1    28.4     2.3    28.3
                                                 43.7%                 2653 LINHARES-138  1   -41.1    19.8    45.5
                                                 24.4%                 2658 N.VENECIA138  1    12.8   -22.1    25.4
 2644  138  0   0.997     0.0     0.0     9.9     0.0     0.0     0.0
 JAGUARE--138  -154.4     0.0     0.0     0.0     0.0     0.0     0.0
                                                 20.9%                 2643 JAGUARE--TAP  1   -28.2    -3.1    28.5
                                                 37.2%                 2648 JAGUARE---69  1    18.3     3.1    18.6
CEPEL - CENTRO DE PESQUISAS DE ENERGIA ELETRICA - PROGRAMA DE ANALISE DE REDES - V08MAR05A                          PAG. 203

ANUAL 06/07 * SETEMBRO 2006 PESADA S/SE 19H N/NE 19H * ANAT0 - FSE - C13
RELATORIO COMPLETO DO SISTEMA * AREA 11 * *            ESCELSA             *

X----------------- D A D O S  -  B A R R A ------------------------X------------ F L U X O S  -  C I R C U I T O S ------------X
 DA BARRA      TENSAO GERACAO INJ EQV  CARGA   ELO CC  SHUNT    MOTOR
 NUM. KV TIPO   MOD/     MW/     MW/     MW/     MW/   Mvar/     MW/
     NOME       ANG     Mvar    Mvar    Mvar    Mvar   EQUIV    Mvar  PARA BARRA                    FLUXOS
                                                FLUXO % SHUNT L         NUM.     NOME     NC     MW    Mvar  MVA/V_d   TAP  DEFAS TIE
X------------X-------X-------X-------X-------X-------X-------X-------X----X------------X--X-------X-------X-------X------X-----X---X

 2645  138  0   1.015     0.0     0.0     0.0     0.0    27.5     0.0
 J.NEIVA--138  -145.1     0.0     0.0     0.0     0.0     0.0     0.0
                                                 22.5%                 2605 BRAGUSSA-TAP  1    37.4     1.3    36.9
                                                 14.0%                 2606 BOAPABA--138  1   -26.4    -1.5    26.0
                                                 22.4%                 2612 ARCEL----138  1    37.3     1.3    36.8
                                                 34.3%                 2624 CIVIT----138  1   -62.8    15.7    63.8
                                                 42.0%                 2649 FIESA----138  1   -77.5    17.1    78.2
                                                 46.5%                 2653 LINHARES-138  1    47.8    -6.2    47.5
                                                 35.6%                 2653 LINHARES-138  2    47.7    -6.2    47.4
                                                 21.0%                 2655 MASCAR.--138  1   -39.2    -5.5    39.0
                                                 92.3%                 2693 FICT-JNEIV-1  1    17.8     5.7    18.5 0.953*
                                                 92.3%                 2694 FICT-JNEIV-2  1    17.8     5.7    18.5 0.953*
 2646   69  0   1.050     0.0     0.0    14.9     0.0     0.0     0.0
 J.NEIVA---69  -147.8     0.0     0.0     2.2     0.0     0.0     0.0
                                                 19.8%                 2627 2 VENDAS--69  1     7.5    -1.8     7.3
                                                 26.2%                 2633 TAP---FUNDAO  1     1.4     8.7     8.4
                                                 60.6%                 2693 FICT-JNEIV-1  1   -11.9    -4.6    12.1 1.000F
                                                 60.6%                 2694 FICT-JNEIV-2  1   -11.9    -4.6    12.1 1.000F
 2647   14  0   1.048     0.0     0.0    11.9     0.0     0.0     0.0
```

```
 J.NEIVA13.8A  -150.0     0.0     0.0     0.0     0.0     0.0     0.0
                                                47.3%                 2693 FICT-JNEIV-1  1    -6.0     0.0     5.7 1.000F
                                                47.3%                 2694 FICT-JNEIV-2  1    -5.9     0.0     5.7 1.000F
 2648   69  0   1.039     0.0     0.0     0.0     0.0     0.0     0.0
 JAGUARE---69  -157.6     0.0     0.0     0.0     0.0     0.0     0.0
                                                35.5%                 2644 JAGUARE--138  1   -18.3    -2.1    17.7 1.050F
                                                36.9%                 2650 F.ALEGRE--69  1    18.3     2.1    17.7
 2649  138  0   1.017     0.0     0.0     2.4     0.0     0.0     0.0
 FIESA----138  -143.0     0.0     0.0     1.0     0.0     0.0     0.0
                                                43.3%                 2620 CARAPINA-138  1   -80.6    14.6    80.5
                                                42.2%                 2645 J.NEIVA--138  1    78.2   -15.6    78.4
 2650    1  0   1.013     0.0     0.0     3.2     0.0     0.0     0.0
 F.ALEGRE--69  -159.2     0.0     0.0     1.3     0.0     0.0     0.0
                                                37.0%                 2648 JAGUARE---69  1   -17.9    -1.8    17.8
                                                30.2%                 2673 S.MATEUS--69  1    14.7     0.5    14.5
 2651   35  0   1.013     0.0     0.0    29.6     0.0     0.0     0.0
 CARAP-2-34.5  -143.4     0.0     0.0    11.7     0.0     0.0     0.0
                                                78.5%                 2692 FICT-CARAP-2  1   -29.6   -11.7    31.4 1.052F
CEPEL - CENTRO DE PESQUISAS DE ENERGIA ELETRICA - PROGRAMA DE ANALISE DE REDES - V08MAR05A                              PAG. 204

ANUAL 06/07 * SETEMBRO 2006 PESADA S/SE 19H N/NE 19H * ANAT0 - FSE - C13
RELATORIO COMPLETO DO SISTEMA * AREA 11 * *             ESCELSA             *

X----------------- D A D O S  -  B A R R A -------------------------X------------ F L U X O S  -  C I R C U I T O S ------------X
 DA BARRA      TENSAO GERACAO INJ EQV  CARGA   ELO CC  SHUNT    MOTOR
 NUM. KV TIPO   MOD/     MW/     MW/     MW/     MW/   Mvar/     MW/
     NOME       ANG     Mvar    Mvar    Mvar    Mvar   EQUIV    Mvar  PARA BARRA                   FLUXOS
                                                FLUXO % SHUNT L        NUM.     NOME     NC     MW    Mvar  MVA/V_d   TAP  DEFAS TIE
X------------X-------X-------X-------X-------X-------X-------X-------X----X------------X--X-------X-------X-------X------X-----X---X

 2652  138  0   1.023     0.0     0.0     0.0     0.0     0.0     0.0
 ITARANA--138  -141.4     0.0     0.0     0.0     0.0     0.0     0.0
                                                50.0%                 2642 ITARANA---69  1    26.9     9.8    28.0
                                                 7.1%                 2655 MASCAR.--138  1    -1.0   -14.7    14.4
                                                20.0%                 2680 SUICA----138  1   -25.9     4.9    25.8
 2653  138  0   0.997     0.0     0.0    50.5     0.0     0.0     0.0
 LINHARES-138  -149.0     0.0     0.0     8.8     0.0     0.0     0.0
                                                45.4%                 2643 JAGUARE--TAP  1    42.5   -20.4    47.3
                                                46.1%                 2645 J.NEIVA--138  1   -46.5     5.8    47.0
                                                35.3%                 2645 J.NEIVA--138  2   -46.5     5.8    46.9
 2654  230  0   1.064     0.0     0.0     0.0     0.0     0.0     0.0
 MASCAR.--230  -108.5     0.0     0.0     0.0     0.0     0.0     0.0
                                                30.9%                 2655 MASCAR.--138  1    90.2    40.0    92.8 1.000F -30.0
                                                16.6%                 4043 AIMORES--230  1   -54.0   -23.4    55.3               41
                                                11.2%                 4043 AIMORES--230  2   -36.2   -16.6    37.4               41
 2655  138  0   1.040     0.0     0.0     0.0     0.0     0.0     0.0
 MASCAR.--138  -141.6     0.0     0.0     0.0     0.0     0.0     0.0
                                                59.5%                 2600 MASCAREN-3GR  1   -79.2    22.5    79.1 1.045F
                                                27.0%                 2606 BOAPABA--138  1    51.7     7.9    50.3
                                                20.7%                 2645 J.NEIVA--138  1    39.9     3.4    38.5
                                                 5.6%                 2652 ITARANA--138  1     1.0    11.8    11.4
                                                30.9%                 2654 MASCAR.--230  1   -90.2   -34.3    92.8
                                                61.7%                 2676 SGABRIEL-138  1    76.8   -11.3    74.6
 2656  138  0   1.030     0.0     0.0     0.0     0.0     0.0     0.0
 UHE-SJOAQ138  -138.7     0.0     0.0     0.0     0.0     0.0     0.0
                                                 5.8%                 2635 GUARAP.T-138  1     6.1    -5.9     8.2
                                                 5.8%                 2665 PIUMA----138  1    -6.1     5.9     8.2
 2657   14  0   0.959     0.0     0.0     0.0     0.0     0.0     0.0
 CARAPIN-13-2  -143.9     0.0     0.0     0.0     0.0     0.0     0.0
                                                 0.0%                 2692 FICT-CARAP-2  1     0.0     0.0     0.0 1.000F
```

```
 2658  138  0   1.015     0.0     0.0     0.0     0.0    27.5     0.0
 N.VENECIA138  -154.5     0.0     0.0     0.0     0.0     0.0     0.0
                                                 23.0%                 2643 JAGUARE--TAP  1   -12.6    20.8    24.0
                                                  0.1%                 2661 N.VENECIA13A  1    14.0     0.7    13.8
                                                 22.0%                 2664 PINHEIROS138  1    23.6   -13.7    26.8
                                                 52.0%                 2676 SGABRIEL-138  1   -60.5    21.9    63.4
                                                 43.8%                 2695 FICT-N.VEN-1  1    17.8    -1.1    17.5 0.989*
                                                  0.2%                 2695 FICT-N.VEN-1  2    17.8    -1.1    17.5 0.989*
CEPEL - CENTRO DE PESQUISAS DE ENERGIA ELETRICA - PROGRAMA DE ANALISE DE REDES - V08MAR05A                          PAG. 205

ANUAL 06/07 * SETEMBRO 2006 PESADA S/SE 19H N/NE 19H * ANAT0 - FSE - C13
RELATORIO COMPLETO DO SISTEMA * AREA 11 * *             ESCELSA              *

X----------------- D A D O S  -  B A R R A ------------------------X------------ F L U X O S  -  C I R C U I T O S ------------X
 DA BARRA      TENSAO GERACAO INJ EQV  CARGA   ELO CC  SHUNT    MOTOR
 NUM. KV TIPO   MOD/     MW/     MW/     MW/     MW/   Mvar/     MW/
     NOME       ANG     Mvar    Mvar    Mvar    Mvar   EQUIV    Mvar  PARA BARRA                    FLUXOS
                                                FLUXO % SHUNT L         NUM.     NOME     NC     MW    Mvar  MVA/V_d   TAP  DEFAS TIE
X------------X-------X-------X-------X-------X-------X-------X-------X----X------------X--X-------X-------X-------X------X-----X---X

 2659   69  0   1.030     0.0     0.0    23.6     0.0     6.4     0.0
 N.VENECIA69A  -157.2     0.0     0.0     2.8     0.0     0.0     0.0
                                                 30.5%                 2673 S.MATEUS--69  1    11.9    -0.4    11.6
                                                 43.4%                 2695 FICT-N.VEN-1  1   -17.8     2.0    17.4 1.000F
                                                  0.2%                 2695 FICT-N.VEN-1  2   -17.8     2.0    17.4 1.000F
 2660  138  0   1.031     0.0     0.0     0.0     0.0     0.0     0.0
 TAP-LAMEIRAO  -138.9     0.0     0.0     0.0     0.0     0.0     0.0
                                                 13.3%                 2614 CACHOEIRO138  1   -22.7     4.7    22.4
                                                 13.3%                 2635 GUARAP.T-138  1    22.7    -4.7    22.4
 2661   14  0   1.030     0.0     0.0    14.0     0.0     0.0     0.0
 N.VENECIA13A  -157.3     0.0     0.0     0.0     0.0     0.0     0.0
                                                  0.1%                 2658 N.VENECIA138  1   -14.0     0.0    13.6 1.017*
 2662  138  0   1.029     0.0     0.0     2.4     0.0     0.0     0.0
 BELGO-LAMINA  -138.4     0.0     0.0     1.0     0.0     0.0     0.0
                                                  1.5%                 2630 TAP-ALCE-138  1    -2.4    -1.0     2.5
 2663  138  0   1.026     0.0     0.0     0.0     0.0     0.0     0.0
 TAP1--V.RICA  -136.9     0.0     0.0     0.0     0.0     0.0     0.0
                                                 36.5%                 2614 CACHOEIRO138  1   -36.8   -12.8    38.0
                                                 36.5%                 2631 FRUTEIRA-138  1    36.8    12.8    38.0
 2664  138  0   1.018     0.0     0.0    23.3     0.0    17.3     0.0
 PINHEIROS138  -156.0     0.0     0.0     5.8     0.0     0.0     0.0
                                                 20.9%                 2658 N.VENECIA138  1   -23.3    11.5    25.5
 2665  138  0   1.028     0.0     0.0    14.2     0.0     0.0     0.0
 PIUMA----138  -138.4     0.0     0.0     0.0     0.0     0.0     0.0
                                                 14.8%                 2639 TAP-ITAPEMIR  1   -20.3     7.3    21.0
                                                  6.5%                 2656 UHE-SJOAQ138  1     6.1    -7.3     9.2
CEPEL - CENTRO DE PESQUISAS DE ENERGIA ELETRICA - PROGRAMA DE ANALISE DE REDES - V08MAR05A                          PAG. 206

ANUAL 06/07 * SETEMBRO 2006 PESADA S/SE 19H N/NE 19H * ANAT0 - FSE - C13
RELATORIO COMPLETO DO SISTEMA * AREA 11 * *             ESCELSA              *

X----------------- D A D O S  -  B A R R A ------------------------X------------ F L U X O S  -  C I R C U I T O S ------------X
 DA BARRA      TENSAO GERACAO INJ EQV  CARGA   ELO CC  SHUNT    MOTOR
 NUM. KV TIPO   MOD/     MW/     MW/     MW/     MW/   Mvar/     MW/
     NOME       ANG     Mvar    Mvar    Mvar    Mvar   EQUIV    Mvar  PARA BARRA                    FLUXOS
                                                FLUXO % SHUNT L         NUM.     NOME     NC     MW    Mvar  MVA/V_d   TAP  DEFAS TIE
X------------X-------X-------X-------X-------X-------X-------X-------X----X------------X--X-------X-------X-------X------X-----X---X

 2666  138  0   1.030     0.0     0.0     0.0     0.0    56.7     0.0
 PITANGA--138  -137.7     0.0     0.0     0.0     0.0     0.0     0.0
```

```
                                                                 70.0%                 177 VITORIA--138  1  -162.2     0.8   157.4                01
                                                                 70.0%                 177 VITORIA--138  2  -162.2     0.8   157.4                01
                                                                 70.0%                 177 VITORIA--138  3  -162.2     0.8   157.4                01
                                                                 70.0%                 177 VITORIA--138  4  -162.2     0.8   157.4                01
                                                                 47.2%                2620 CARAPINA-138  1   123.3    14.0   120.4
                                                                 47.2%                2620 CARAPINA-138  2   123.3    14.0   120.4
                                                                 45.2%                2620 CARAPINA-138  3   139.3     3.6   135.3
                                                                 45.2%                2620 CARAPINA-138  4   139.3     3.6   135.3
                                                                  7.7%                2625 BMINEIRA-138  1    12.6     3.8    12.8
                                                                  0.4%                2629 CST------138  1     0.0    -0.8     0.8
                                                                  0.4%                2629 CST------138  2     0.0    -0.8     0.8
                                                                 15.6%                2630 TAP-ALCE-138  1    26.6    -3.7    26.0
                                                                 28.2%                2636 GOIA1-TAP138  1    42.2    10.0    42.0
                                                                 28.2%                2637 GOIA2-TAP138  1    42.2    10.0    42.0
 2667  138  0   1.022     0.0     0.0     0.0     0.0     0.0     0.0
 PRAIA----138  -138.4     0.0     0.0     0.0     0.0     0.0     0.0
                                                                 28.4%                2636 GOIA1-TAP138  1   -42.0   -10.3    42.3
                                                                 35.2%                2637 GOIA2-TAP138  1   -41.9   -10.3    42.2
                                                                 35.2%                2668 PRAIA---34.5  1    41.9    10.3    42.3
                                                                 70.4%                2668 PRAIA---34.5  2    41.9    10.3    42.3
 2668   35  0   0.992     0.0     0.0    83.9     0.0    21.2     0.0
 PRAIA---34.5  -143.4     0.0     0.0    34.2     0.0     0.0     0.0
                                                                 35.7%                2667 PRAIA----138  1   -41.9    -6.5    42.8 0.987*
                                                                 71.4%                2667 PRAIA----138  2   -41.9    -6.5    42.8 0.987*
 2669  138  0   1.030     0.0     0.0     0.0     0.0     0.0     0.0
 TAP2--V.RICA  -136.7     0.0     0.0     0.0     0.0     0.0     0.0
                                                                  0.9%                2614 CACHOEIRO138  1    -0.9    -0.2     0.9
                                                                  0.9%                2641 ITABIRA-138   1     0.9     0.2     0.9
 2672   69  0   1.019     0.0     0.0     0.0     0.0     0.0     0.0
 R.BONITO--69  -143.5     0.0     0.0     0.0     0.0     0.0     0.0
                                                                 18.4%                2602 RBONITO--1MQ  1    -4.5     0.0     4.4 1.052F
                                                                 50.4%                2679 S.TEREZA--69  1    16.9    -6.1    17.7
                                                                 21.9%                2681 SUICA-----69  1   -12.4     6.1    13.6
 2673   69  0   0.981     0.0     0.0    25.6     0.0     0.0     0.0
 S.MATEUS--69  -161.6     0.0     0.0     0.0     0.0     0.0     0.0
                                                                 30.3%                2650 F.ALEGRE--69  1   -14.3    -0.3    14.5
                                                                 30.4%                2659 N.VENECIA69A  1   -11.3     0.3    11.6
CEPEL - CENTRO DE PESQUISAS DE ENERGIA ELETRICA - PROGRAMA DE ANALISE DE REDES - V08MAR05A                                          PAG. 207

ANUAL 06/07 * SETEMBRO 2006 PESADA S/SE 19H N/NE 19H * ANAT0 - FSE - C13
RELATORIO COMPLETO DO SISTEMA * AREA 11 * *             ESCELSA             *

X----------------- D A D O S  -  B A R R A -------------------------X------------ F L U X O S  -  C I R C U I T O S ------------X
 DA BARRA      TENSAO GERACAO INJ EQV  CARGA   ELO CC  SHUNT    MOTOR
 NUM. KV TIPO   MOD/     MW/     MW/     MW/     MW/   Mvar/     MW/
     NOME       ANG     Mvar    Mvar    Mvar    Mvar   EQUIV    Mvar  PARA BARRA                    FLUXOS
                                                FLUXO % SHUNT L        NUM.     NOME     NC     MW    Mvar  MVA/V_d   TAP  DEFAS TIE
X------------X-------X-------X-------X-------X-------X-------X-------X----X------------X--X-------X-------X-------X------X-----X---X

 2674  138  0   1.016     0.0     0.0    71.6     0.0     0.0     0.0
 SAMARCO--138  -139.7     0.0     0.0    30.5     0.0     0.0     0.0
                                                                 27.0%                2635 GUARAP.T-138  1   -35.8   -15.3    38.3
                                                                 27.0%                2635 GUARAP.T-138  2   -35.8   -15.3    38.3
 2675   69  0   0.998     0.0     0.0     4.2     0.0     0.0     0.0
 S.ROQUE---69  -146.2     0.0     0.0     0.9     0.0     0.0     0.0
                                                                 13.5%                2679 S.TEREZA--69  1    -4.2    -0.9     4.3
 2676  138  0   1.017     0.0     0.0    10.7     0.0     0.0     0.0
 SGABRIEL-138  -149.9     0.0     0.0     2.2     0.0     0.0     0.0
                                                                 61.0%                2655 MASCAR.--138  1   -73.0    17.5    73.8
                                                                 52.7%                2658 N.VENECIA138  1    62.3   -19.7    64.2
```

```
 2677   69  0   1.004     0.0     0.0     0.0     0.0     0.0     0.0
 S.MARIA--TAP  -146.4     0.0     0.0     0.0     0.0     0.0     0.0
                                              19.2%                 2642 ITARANA---69  1    -6.0    -1.6     6.2
                                              19.7%                 2678 S.MARIA---69  1    10.1     0.0    10.0
                                              13.8%                 2679 S.TEREZA--69  1    -4.1     1.7     4.4
 2678   69  0   0.996     0.0     0.0    10.0     0.0     0.0     0.0
 S.MARIA---69  -147.1     0.0     0.0     0.0     0.0     0.0     0.0
                                              19.7%                 2677 S.MARIA--TAP  1   -10.0     0.0    10.0
 2679   69  0   1.007     0.0     0.0     6.1     0.0     0.0     0.0
 S.TEREZA--69  -145.7     0.0     0.0     2.1     0.0     0.0     0.0
                                              23.5%                 2633 TAP---FUNDAO  1     2.0    -7.3     7.5
                                              50.2%                 2672 R.BONITO--69  1   -16.5     6.4    17.6
                                              13.3%                 2675 S.ROQUE---69  1     4.2     0.7     4.3
                                              14.2%                 2677 S.MARIA--TAP  1     4.1    -1.9     4.5
 2680  138  0   1.024     0.0     0.0     0.0     0.0     0.0     0.0
 SUICA----138  -139.7     0.0     0.0     0.0     0.0     0.0     0.0
                                              31.8%                 2601 SUICA----1MQ  1   -12.0     1.1    11.8 1.052F
                                              14.8%                 2622 CEASA----138  1   -25.3     0.4    24.7
                                              12.9%                 2626 CARIACICA138  1   -16.2     4.6    16.4
                                              20.5%                 2652 ITARANA--138  1    26.1    -6.9    26.4
                                              91.8%                 2681 SUICA-----69  1    27.3     0.7    26.6
 2681   69  0   1.017     0.0     0.0    14.8     0.0     0.0     0.0
 SUICA-----69  -142.7     0.0     0.0     5.4     0.0     0.0     0.0
                                              22.0%                 2672 R.BONITO--69  1    12.5    -6.1    13.7
                                              92.5%                 2680 SUICA----138  1   -27.3     0.7    26.8 0.992*
 2682  138  0   1.018     0.0     0.0    66.8     0.0     0.0     0.0
 TUBARAO138-1  -138.8     0.0     0.0    28.5     0.0     0.0     0.0
                                              43.5%                 2620 CARAPINA-138  1   -66.8   -28.5    71.3
CEPEL - CENTRO DE PESQUISAS DE ENERGIA ELETRICA - PROGRAMA DE ANALISE DE REDES - V08MAR05A                                PAG. 208

ANUAL 06/07 * SETEMBRO 2006 PESADA S/SE 19H N/NE 19H * ANAT0 - FSE - C13
RELATORIO COMPLETO DO SISTEMA * AREA 11 * *            ESCELSA             *

X----------------- D A D O S  -  B A R R A -------------------------X------------- F L U X O S  -  C I R C U I T O S -------------X
 DA BARRA      TENSAO GERACAO INJ EQV  CARGA   ELO CC  SHUNT    MOTOR
 NUM. KV TIPO   MOD/     MW/     MW/     MW/     MW/   Mvar/     MW/
     NOME       ANG     Mvar    Mvar    Mvar    Mvar   EQUIV    Mvar  PARA BARRA                    FLUXOS
                                                FLUXO % SHUNT L        NUM.     NOME     NC     MW    Mvar  MVA/V_d   TAP  DEFAS TIE
X------------X-------X-------X-------X-------X-------X-------X-------X----X------------X--X-------X-------X-------X------X-----X---X

 2683  138  0   1.016     0.0     0.0    82.9     0.0     0.0     0.0
 TUBARAO138-2  -138.9     0.0     0.0    35.3     0.0     0.0     0.0
                                              54.1%                 2620 CARAPINA-138  1   -82.9   -35.3    88.7
 2684  138  0   1.015     0.0     0.0    94.1     0.0     0.0     0.0
 TUBARAR3-138  -139.2     0.0     0.0    40.1     0.0     0.0     0.0
                                              55.1%                 2620 CARAPINA-138  2   -94.1   -40.1   100.8
 2686   69  0   1.034     0.0     0.0     0.0     0.0     0.0     0.0
 BRAMINEX--69  -136.2     0.0     0.0     0.0     0.0     0.0     0.0
                                              24.3%                 2615 CACHOEIRO-69  1     8.7    -9.1    12.2
                                              24.3%                 2687 ALEGRE----69  1    -8.7     9.1    12.2
 2687   69  0   1.024     0.0     0.0    15.8     0.0     0.0     0.0
 ALEGRE----69  -131.8     0.0     0.0     4.3     0.0     0.0     0.0
                                              25.3%                 2686 BRAMINEX--69  1     9.3    -9.0    12.6
                                              34.7%                 2690 ROSAL-----69  1   -25.1     4.7    25.0
 2688   69  0   1.019     0.0     0.0    14.0     0.0     0.0     0.0
 MARMORE---69  -137.1     0.0     0.0    10.0     0.0     0.0     0.0
                                              30.7%                 2615 CACHOEIRO-69  1    -4.6   -18.2    18.4
                                              20.4%                 2689 MIMOSO----69  1    -9.4     8.2    12.2
 2689   69  0   1.012     0.0     0.0    18.0     0.0     0.0     0.0
 MIMOSO----69  -133.8     0.0     0.0     3.4     0.0     0.0     0.0
```

```
                                                  21.0%                 2688 MARMORE---69  1     9.8    -8.2    12.6
                                                  38.7%                 2690 ROSAL-----69  1   -27.8     4.8    27.9
 2690   69  0   1.043     0.0     0.0     0.0     0.0     0.0     0.0
 ROSAL-----69  -126.9     0.0     0.0     0.0     0.0     0.0     0.0
                                                  34.8%                 2687 ALEGRE----69  1    25.9    -3.0    25.0
                                                  38.8%                 2689 MIMOSO----69  1    29.1    -2.1    28.0
                                                  88.3%                 2696 Rosal----2MQ  1   -55.0     5.1    53.0 1.050F
 2691    1  0   0.979     0.0     0.0     0.0     0.0     0.0     0.0
 FICT-CARAP-1  -144.7     0.0     0.0     0.0     0.0     0.0     0.0
                                                   0.0%                 2603 CARAPIN-13-1  1     0.0     0.0     0.0
                                                  91.1%                 2620 CARAPINA-138  1   -35.3    -5.2    36.4
                                                  91.1%                 2621 CARAP-1-34.5  1    35.3     5.2    36.4
 2692    1  0   0.959     0.0     0.0     0.0     0.0     0.0     0.0
 FICT-CARAP-2  -143.9     0.0     0.0     0.0     0.0     0.0     0.0
                                                  82.6%                 2620 CARAPINA-138  1   -29.6   -11.4    33.1
                                                  82.6%                 2651 CARAP-2-34.5  1    29.6    11.4    33.1
                                                   0.0%                 2657 CARAPIN-13-2  1     0.0     0.0     0.0
CEPEL - CENTRO DE PESQUISAS DE ENERGIA ELETRICA - PROGRAMA DE ANALISE DE REDES - V08MAR05A                          PAG. 209

ANUAL 06/07 * SETEMBRO 2006 PESADA S/SE 19H N/NE 19H * ANAT0 - FSE - C13
RELATORIO COMPLETO DO SISTEMA * AREA 11 * *             ESCELSA              *

X----------------- D A D O S  -  B A R R A ------------------------X------------ F L U X O S  -  C I R C U I T O S ------------X
 DA BARRA      TENSAO GERACAO INJ EQV  CARGA   ELO CC  SHUNT    MOTOR
 NUM. KV TIPO   MOD/     MW/     MW/     MW/     MW/   Mvar/     MW/
     NOME       ANG     Mvar    Mvar    Mvar    Mvar   EQUIV    Mvar  PARA BARRA                    FLUXOS
                                                FLUXO % SHUNT L         NUM.     NOME     NC     MW    Mvar  MVA/V_d   TAP  DEFAS TIE
X------------X-------X-------X-------X-------X-------X-------X-------X----X------------X--X-------X-------X-------X------X-----X---X

 2693    1  0   1.049     0.0     0.0     0.0     0.0     0.0     0.0
 FICT-JNEIV-1  -148.0     0.0     0.0     0.0     0.0     0.0     0.0
                                                  88.0%                 2645 J.NEIVA--138  1   -17.8    -4.7    17.6
                                                  60.6%                 2646 J.NEIVA---69  1    11.9     4.5    12.1
                                                  47.3%                 2647 J.NEIVA13.8A  1     6.0     0.2     5.7
 2694    1  0   1.049     0.0     0.0     0.0     0.0     0.0     0.0
 FICT-JNEIV-2  -148.0     0.0     0.0     0.0     0.0     0.0     0.0
                                                  88.0%                 2645 J.NEIVA--138  1   -17.8    -4.7    17.6
                                                  60.6%                 2646 J.NEIVA---69  1    11.9     4.5    12.1
                                                  47.3%                 2647 J.NEIVA13.8A  1     6.0     0.2     5.7
 2695    1  0   1.031     0.0     0.0     0.0     0.0     0.0     0.0
 FICT-N.VEN-1  -157.5     0.0     0.0     0.0     0.0     0.0     0.0
                                                  43.4%                 2658 N.VENECIA138  1   -17.8     2.1    17.4
                                                   0.2%                 2658 N.VENECIA138  2   -17.8     2.1    17.4
                                                  43.4%                 2659 N.VENECIA69A  1    17.8    -2.1    17.4
                                                   0.2%                 2659 N.VENECIA69A  2    17.8    -2.1    17.4
 2696    1  1   0.990    55.0     0.0     0.0     0.0     0.0     0.0
 Rosal----2MQ  -119.0     2.4     0.0     0.0     0.0     0.0     0.0
                                                  92.7%                 2690 ROSAL-----69  1    55.0     2.4    55.6
 2697    1  0   1.006     0.0     0.0     0.0     0.0     0.0     0.0
 FICT-CACH--1  -141.4     0.0     0.0     0.0     0.0     0.0     0.0
                                                  74.9%                 2614 CACHOEIRO138  1   -26.1    15.0    29.9
                                                  54.5%                 2616 CACH----34.5  1    15.8   -15.2    21.8
                                                  73.1%                 2617 CACH----13.8  1    10.3     0.2    10.2


TOTAIS DA AREA 11

X--------X--------X--------X--------X--------X--------X--------X--------X
```

```
  GERACAO  INJ EQV   CARGA   ELO CC    SHUNT   EXPORT   IMPORT   PERDAS
    MW/      MW/      MW/      MW/     Mvar/     MW/      MW/      MW/
   Mvar     Mvar     Mvar     Mvar     EQUIV    Mvar     Mvar     Mvar
X--------X--------X--------X--------X--------X--------X--------X--------X

    176.5      0.0   1325.9      0.0    445.3      0.0   1180.1     30.7
    -14.9      0.0    367.7      0.0      0.0     71.1     34.2     25.8
CEPEL - CENTRO DE PESQUISAS DE ENERGIA ELETRICA - PROGRAMA DE ANALISE DE REDES - V08MAR05A                                PAG. 210

ANUAL 06/07 * SETEMBRO 2006 PESADA S/SE 19H N/NE 19H * ANAT0 - FSE - C13
RELATORIO COMPLETO DO SISTEMA * AREA 12 * *             CELG                *

X----------------- D A D O S  -  B A R R A -------------------------X------------ F L U X O S  -  C I R C U I T O S ------------X
 DA BARRA      TENSAO GERACAO INJ EQV  CARGA   ELO CC  SHUNT    MOTOR
 NUM. KV TIPO   MOD/     MW/     MW/     MW/     MW/   Mvar/     MW/
     NOME       ANG     Mvar    Mvar    Mvar    Mvar   EQUIV    Mvar  PARA BARRA                    FLUXOS
                                                FLUXO % SHUNT L         NUM.     NOME     NC     MW    Mvar  MVA/V_d   TAP  DEFAS TIE
X------------X-------X-------X-------X-------X-------X-------X-------X----X------------X--X-------X-------X-------X------X-----X---X

  749    1  0   1.030     0.0     0.0     0.0     0.0     0.0     0.0
 C.DOUR-1-230   -81.8     0.0     0.0     0.0     0.0     0.0     0.0
                                              23.7%                   225 ITUMBIAR-230  1    57.9    12.4    57.5              01
                                               8.5%                   231 R.VERDE--230  1     4.3   -16.8    16.8              01
                                               1.6%                   754 C.DOU13K-2GR  1  -168.0    17.0   163.9 1.025F
                                              28.9%                   755 C.DOURADA138  1    35.7    -0.6    34.6 1.000F
                                               0.7%                   756 C.DOUR-2-230  1    70.1   -12.0    69.1
  750    1  1   1.020    27.0     0.0     0.0     0.0     0.0     0.0
 C.DOUR11-2GR   -78.8    -1.4     0.0     0.0     0.0     0.0     0.0
                                               0.3%                   755 C.DOURADA138  1    27.0    -1.4    26.5
  751    1  1   1.020    86.0     0.0     0.0     0.0     0.0     0.0
 C.DOUR13-2GR   -78.6    -2.8     0.0     0.0     0.0     0.0     0.0
                                               0.8%                   755 C.DOURADA138  1    86.0    -2.8    84.4
  752    1  1   1.000    43.0     0.0     0.0     0.0     0.0     0.0
 C.DOU13A-1GR   -77.3    -1.2     0.0     0.0     0.0     0.0     0.0
                                               0.4%                   756 C.DOUR-2-230  1    43.0    -1.2    43.0
  753    1  1   0.970   202.0     0.0     0.0     0.0     0.0     0.0
 C.DOU13N-3GR   -77.4   -22.2     0.0     0.0     0.0     0.0     0.0
                                               2.1%                   756 C.DOUR-2-230  1   202.0   -22.2   209.5
  754    1  1   1.000   168.0     0.0     0.0     0.0     0.0     0.0
 C.DOU13K-2GR   -76.3    -0.8     0.0     0.0     0.0     0.0     0.0
                                               1.7%                   749 C.DOUR-1-230  1   168.0    -0.8   168.0
  755    1  0   1.031     0.0     0.0     0.0     0.0     0.0     0.0
 C.DOURADA138   -83.1     0.0     0.0     0.0     0.0     0.0     0.0
                                              13.5%                   248 TAP-RIOBOIS   1    10.0    -6.8    11.7              01
                                              42.2%                   307 AVATINGU-138  1    54.3    -2.5    52.8              02
                                              42.2%                   307 AVATINGU-138  2    54.3    -2.5    52.7              02
                                              28.9%                   749 C.DOUR-1-230  1   -35.7     1.4    34.6
                                               0.3%                   750 C.DOUR11-2GR  1   -27.0     3.4    26.4 1.004F
                                               0.8%                   751 C.DOUR13-2GR  1   -86.0     9.6    83.9 1.005F
                                              36.1%                   759 CDOURADA--69  1     8.8     3.0     9.0 1.043*
                                              24.5%                   782 QUIRINOP.138  1    21.2    -5.7    21.3
  756  230  0   1.030     0.0     0.0     0.0     0.0     0.0     0.0
 C.DOUR-2-230   -81.8     0.0     0.0     0.0     0.0     0.0     0.0
                                               0.7%                   749 C.DOUR-1-230  1   -70.1    12.0    69.1
                                               0.4%                   752 C.DOU13A-1GR  1   -43.0     4.5    42.0 1.025F
                                               2.0%                   753 C.DOU13N-3GR  1  -202.0    38.1   199.5 1.050F
                                              77.1%                   760 ANHANGUE-230  1   149.1   -27.4   147.2
                                              74.2%                   790 PLANALTO-230  1   166.0   -27.2   163.3
CEPEL - CENTRO DE PESQUISAS DE ENERGIA ELETRICA - PROGRAMA DE ANALISE DE REDES - V08MAR05A                                PAG. 211
```

ANUAL 06/07 * SETEMBRO 2006 PESADA S/SE 19H N/NE 19H * ANAT0 - FSE - C13
RELATORIO COMPLETO DO SISTEMA * AREA 12 * * CELG *

| DA BARRA NUM. | KV | TIPO | NOME | TENSAO MOD/ ANG | GERACAO MW/ Mvar | INJ EQV MW/ Mvar | CARGA MW/ Mvar | ELO CC MW/ Mvar FLUXO % | SHUNT Mvar/ EQUIV SHUNT L | MOTOR MW/ Mvar | PARA BARRA NUM. | NOME | NC | MW | FLUXOS Mvar | MVA/V_d | TAP | DEFAS | TIE |
|---|---|---|---|---|---|---|---|---|---|---|---|---|---|---|---|---|---|---|---|
| 759 | 1 | 0 | CDOURADA--69 | 0.981 -84.5 | 0.0 0.0 | 0.0 0.0 | 8.8 2.8 | 0.0 0.0 37.7% | 0.0 0.0 | 0.0 0.0 | | | | | | | | | |
| | | | | | | | | | | | 755 | C.DOURADA138 | 1 | -8.8 | -2.8 | 9.4 | | | |
| 760 | 230 | 0 | ANHANGUE-230 | 1.030 -97.9 | 0.0 0.0 | 0.0 0.0 | 0.0 0.0 | 0.0 0.0 33.5% | 0.0 0.0 | 0.0 0.0 | | | | | | | | | |
| | | | | | | | | | | | 168 | BANDEI-2-230 | 1 | -101.1 | -84.8 | 128.1 | | | 01 |
| | | | | | | | | 33.5% | | | 168 | BANDEI-2-230 | 2 | -101.1 | -84.8 | 128.1 | | | 01 |
| | | | | | | | | 73.4% | | | 756 | C.DOUR-2-230 | 1 | -140.4 | 34.3 | 140.3 | | | |
| | | | | | | | | 82.8% | | | 761 | ANHANGUE-138 | 1 | 81.3 | 25.7 | 82.8 | 0.975* | | |
| | | | | | | | | 82.8% | | | 761 | ANHANGUE-138 | 2 | 81.3 | 25.7 | 82.8 | 0.975* | | |
| | | | | | | | | 61.6% | | | 762 | ANHANGUE-069 | 1 | 29.2 | 12.4 | 30.8 | 0.968* | | |
| | | | | | | | | 85.4% | | | 763 | GOIANIA--230 | 1 | 187.5 | 47.9 | 187.9 | | | |
| | | | | | | | | 57.3% | | | 790 | PLANALTO-230 | 1 | -126.4 | 29.9 | 126.1 | | | |
| | | | | | | | | 39.7% | | | 2990 | PALMEIRA-230 | 1 | 89.6 | -6.3 | 87.2 | | | |
| 761 | 1 | 0 | ANHANGUE-138 | 1.042 -100.6 | 0.0 0.0 | 0.0 0.0 | 0.0 0.0 | 0.0 0.0 80.7% | 0.0 0.0 | 0.0 0.0 | | | | | | | | | |
| | | | | | | | | | | | 760 | ANHANGUE-230 | 1 | -81.3 | -21.4 | 80.7 | | | |
| | | | | | | | | 80.7% | | | 760 | ANHANGUE-230 | 2 | -81.3 | -21.4 | 80.7 | | | |
| | | | | | | | | 32.9% | | | 770 | REAL-----138 | 1 | 35.2 | 3.4 | 33.9 | | | |
| | | | | | | | | 78.4% | | | 772 | ATLANTICO138 | 1 | 73.4 | 27.7 | 75.3 | | | |
| | | | | | | | | 37.0% | | | 2968 | BELAVISTA138 | 1 | 38.6 | 9.4 | 38.1 | | | |
| | | | | | | | | 36.3% | | | 3709 | ANHANGUER69A | 1 | 8.7 | 3.7 | 9.1 | 1.001* | | |
| | | | | | | | | 6.6% | | | 3735 | TAPPETROB138 | 1 | 6.9 | -1.4 | 6.8 | | | |
| 762 | 1 | 0 | ANHANGUE-069 | 1.029 -102.9 | 0.0 0.0 | 0.0 0.0 | 29.2 11.4 | 0.0 0.0 59.7% | 1.9 0.0 | 0.0 0.0 | | | | | | | | | |
| | | | | | | | | | | | 760 | ANHANGUE-230 | 1 | -29.2 | -9.5 | 29.8 | | | |
| 763 | 230 | 0 | GOIANIA--230 | 1.020 -99.1 | 0.0 0.0 | 0.0 0.0 | 0.0 0.0 | 0.0 0.0 85.6% | 0.0 0.0 | 0.0 0.0 | | | | | | | | | |
| | | | | | | | | | | | 760 | ANHANGUE-230 | 1 | -186.6 | -45.4 | 188.3 | | | |
| | | | | | | | | 49.1% | | | 766 | XAVANTES-230 | 1 | 108.8 | 17.2 | 108.0 | | | |
| | | | | | | | | 60.2% | | | 2954 | G.LESTE--13C | 1 | 27.3 | 14.0 | 30.1 | 0.968* | | |
| | | | | | | | | 52.8% | | | 2960 | G.LESTE--13A | 1 | 19.0 | 3.8 | 19.0 | 0.988* | | |
| | | | | | | | | 65.1% | | | 2961 | G.LESTE--13B | 1 | 31.5 | 10.4 | 32.5 | 0.978* | | |
| 764 | 138 | 0 | AEROPORTO138 | 1.030 -103.9 | 0.0 0.0 | 0.0 0.0 | 0.0 0.0 | 0.0 0.0 33.0% | 0.0 0.0 | 0.0 0.0 | | | | | | | | | |
| | | | | | | | | | | | 769 | FERROVIAR138 | 1 | -51.5 | -12.8 | 51.5 | | | |
| | | | | | | | | 49.1% | | | 2964 | AEROPORTO13A | 1 | 16.6 | 1.7 | 16.2 | 1.000F | | |
| | | | | | | | | 60.8% | | | 2965 | AEROPORTO13B | 1 | 20.3 | 3.9 | 20.1 | 0.975F | | |
| | | | | | | | | 47.8% | | | 3719 | AEROPORTO13C | 1 | 14.6 | 7.1 | 15.8 | 0.976* | | |
| 765 | 1 | 0 | INHUMAS138IP | 1.041 -102.9 | 0.0 0.0 | 0.0 0.0 | 0.0 0.0 | 0.0 0.0 0.0% | 0.0 0.0 | 0.0 0.0 | | | | | | | | | |
| | | | | | | | | | | | 768 | XAVANTES 138 | 1 | 0.0 | 0.0 | 0.0 | | | |



ANUAL 06/07 * SETEMBRO 2006 PESADA S/SE 19H N/NE 19H * ANAT0 - FSE - C13
RELATORIO COMPLETO DO SISTEMA * AREA 12 * * CELG *

X---------- D A D O S - B A R R A ----------X---------- F L U X O S - C I R C U I T O S ----------X
DA BARRA NUM. KV TIPO | TENSAO MOD/ | GERACAO MW/ | INJ EQV MW/ | CARGA MW/ | ELO CC MW/ | SHUNT Mvar/ | MOTOR MW/

```
     NOME       ANG     Mvar    Mvar    Mvar    Mvar   EQUIV    Mvar  PARA BARRA                    FLUXOS
                                                FLUXO % SHUNT L         NUM.     NOME     NC     MW    Mvar  MVA/V_d   TAP  DEFAS TIE
X------------X-------X-------X-------X-------X-------X-------X-------X----X------------X--X-------X-------X-------X------X-----X---X

  766  230  0   1.009     0.0     0.0     0.0     0.0     0.0     0.0
 XAVANTES-230  -100.6     0.0     0.0     0.0     0.0     0.0     0.0
                                            53.6%                 226 BANDEIRA-230  1  -159.1   -28.4   160.2              01
                                            77.2%                 226 BANDEIRA-230  2  -156.3   -28.6   157.5              01
                                            49.4%                 763 GOIANIA--230  1  -108.1   -18.6   108.7
                                            71.9%                 768 XAVANTES 138  1   105.0    28.5   107.9 0.961*
                                            75.7%                 768 XAVANTES 138  2   110.5    30.0   113.5 0.961*
                                            75.3%                 768 XAVANTES 138  3   109.9    29.9   112.9 0.961*
                                            38.4%                3723 PIRINEUS-230  1    98.0   -12.8    97.9
  767    1  0   1.033     0.0     0.0     0.0     0.0     0.0     0.0
 MEIAPONTE138  -103.4     0.0     0.0     0.0     0.0     0.0     0.0
                                            68.8%                 768 XAVANTES 138  1   -70.2   -20.7    70.9
                                            51.3%                 786 GOIA138       1    51.6    17.5    52.8
                                            55.4%                2962 MEIAPONTE13   1    18.6     3.2    18.3 1.000F
  768  138  0   1.040     0.0     0.0     0.0     0.0     0.0     0.0
 XAVANTES 138  -102.8     0.0     0.0     0.0     0.0     0.0     0.0
                                             3.4%                 765 INHUMAS138IP  1     0.0    -2.8     2.7
                                            69.1%                 766 XAVANTES-230  1  -105.0   -24.2   103.6
                                            72.7%                 766 XAVANTES-230  2  -110.5   -25.5   109.1
                                            72.3%                 766 XAVANTES-230  3  -109.9   -25.4   108.5
                                            68.7%                 767 MEIAPONTE138  1    70.5    21.1    70.8
                                            49.8%                 769 FERROVIAR138  1    77.5    22.6    77.7
                                            49.8%                 769 FERROVIAR138  2    77.5    22.6    77.7
                                            77.9%                2994 TAP.TRIND138  1    83.1     7.4    80.2
                                            16.1%                3712 SGENOVEVA138  1    16.7     4.2    16.6
  769    1  0   1.032     0.0     0.0     0.0     0.0     0.0     0.0
 FERROVIAR138  -103.8     0.0     0.0     0.0     0.0     0.0     0.0
                                            33.0%                 764 AEROPORTO138  1    51.5    12.8    51.5
                                            49.9%                 768 XAVANTES 138  1   -77.3   -21.9    77.8
                                            49.9%                 768 XAVANTES 138  2   -77.3   -21.9    77.8
                                            56.6%                 773 CAMPINAS 138  1    57.1    18.9    58.3
                                            80.7%                2963 FERROVIAR-13  1    45.9    12.1    46.0 0.980F
  770    1  0   1.040     0.0     0.0     0.0     0.0     0.0     0.0
 REAL-----138  -101.0     0.0     0.0     0.0     0.0     0.0     0.0
                                            33.0%                 761 ANHANGUE-138  1   -35.1    -3.9    34.0
                                             0.0%                 771 INDEPEND138A  1     0.0    -1.1     1.1
                                            55.3%                2966 REAL-----13A  1    18.7     3.2    18.3 0.975F
                                            48.1%                2967 REAL-----13B  1    16.4     1.8    15.9 0.975F
  771    1  0   1.040     0.0     0.0     0.0     0.0     0.0     0.0
 INDEPEND138A  -101.0     0.0     0.0     0.0     0.0     0.0     0.0
                                             0.0%                 770 REAL-----138  1     0.0     0.0     0.0
```





```
X----------------- D A D O S  -  B A R R A -------------------------X------------ F L U X O S  -  C I R C U I T O S ------------X
 DA BARRA      TENSAO GERACAO INJ EQV  CARGA   ELO CC  SHUNT    MOTOR
 NUM. KV TIPO   MOD/     MW/     MW/     MW/     MW/   Mvar/     MW/
     NOME       ANG     Mvar    Mvar    Mvar    Mvar   EQUIV    Mvar  PARA BARRA                    FLUXOS
                                                FLUXO % SHUNT L         NUM.     NOME     NC     MW    Mvar  MVA/V_d   TAP  DEFAS TIE
X------------X-------X-------X-------X-------X-------X-------X-------X----X------------X--X-------X-------X-------X------X-----X---X

  772    1  0   1.028     0.0     0.0     0.0     0.0     0.0     0.0
 ATLANTICO138  -101.6     0.0     0.0     0.0     0.0     0.0     0.0
                                            78.7%                 761 ANHANGUE-138  1   -72.8   -27.0    75.5
```

```
                                                 69.1%                 2956 ATLANTICO13A  1    22.7     5.9    22.8 0.975F
                                                 68.5%                 2957 ATLANTICO13B  1    22.5     5.8    22.6 0.980F
                                                 93.1%                 3720 ATLANTICO13C  1    27.6    15.3    30.7 0.980F
 773    1  0   1.025     0.0     0.0     0.0     0.0     0.0     0.0
CAMPINAS 138  -104.2     0.0     0.0     0.0     0.0     0.0     0.0
                                                 56.8%                  769 FERROVIAR138  1   -56.9   -18.9    58.5
                                                  0.0%                  774 ATLANTIC138B  1     0.0    -0.5     0.5
                                                 88.1%                 2958 CAMPINAS-13A  1    28.1     9.9    29.1 1.000F
                                                 92.3%                 2959 CAMPINAS-13B  1    28.8     9.4    29.6 1.000F
 774    1  0   1.025     0.0     0.0     0.0     0.0     0.0     0.0
ATLANTIC138B  -104.2     0.0     0.0     0.0     0.0     0.0     0.0
                                                  0.0%                  773 CAMPINAS 138  1     0.0     0.0     0.0
 775  138  0   1.021     0.0     0.0     0.0     0.0     0.0     0.0
DAIA     138  -106.8     0.0     0.0     0.0     0.0     0.0     0.0
                                                 20.7%                  776 JUNDIAI-138   1   -21.6    -3.0    21.4
                                                 85.4%                 2970 DAIA13        1    21.6     3.0    21.4 0.980*
 776  138  0   1.022     0.0     0.0     0.0     0.0     0.0     0.0
JUNDIAI-138   -106.7     0.0     0.0     0.0     0.0     0.0     0.0
                                                 20.7%                  775 DAIA     138  1    21.6     2.6    21.3
                                                 38.3%                 2971 JUNDIAI--13   1    12.7     2.1    12.6 0.987*
                                                 37.5%                 2971 JUNDIAI--13   2    12.5     2.1    12.4 0.987*
                                                 44.9%                 3721 SANTANA--138  1   -46.8    -6.8    46.3
 777  138  0   1.025     0.0     0.0     0.0     0.0     0.0     0.0
ANAPOLIS 138  -106.4     0.0     0.0     0.0     0.0     0.0     0.0
                                                 21.0%                  778 CORUMBA  138  1    16.1     1.0    15.7
                                                 70.7%                 2972 ANAPOLIS13    1    36.1     2.8    35.3 0.993*
                                                 24.8%                 3721 SANTANA--138  1   -26.1    -1.9    25.5
                                                 24.8%                 3721 SANTANA--138  2   -26.1    -1.9    25.5
 778    1  0   1.016     0.0     0.0     0.0     0.0     0.0     0.0
CORUMBA  138  -107.3     0.0     0.0     0.0     0.0     0.0     0.0
                                                 21.6%                  777 ANAPOLIS 138  1   -16.0    -3.8    16.2
                                                 32.3%                 2973 CORUMBA69     1    16.0     3.8    16.2 1.000F
 779    1  0   1.010     0.0     0.0    27.7     0.0    11.0     0.0
INHUMAS  138  -106.9     0.0     0.0    10.0     0.0     0.0     0.0
                                                 15.1%                  780 FIRMINOP.138  1   -14.5    -6.0    15.5
                                                 51.6%                 2975 INHUMAS69     1    25.6     5.0    25.8 0.960*
                                                 52.4%                 2975 INHUMAS69     2    25.9     5.1    26.2 0.960*
                                                 62.3%                 2994 TAP.TRIND138  1   -64.7    -3.1    64.2
CEPEL - CENTRO DE PESQUISAS DE ENERGIA ELETRICA - PROGRAMA DE ANALISE DE REDES - V08MAR05A                          PAG. 214

ANUAL 06/07 * SETEMBRO 2006 PESADA S/SE 19H N/NE 19H * ANAT0 - FSE - C13
RELATORIO COMPLETO DO SISTEMA * AREA 12 * *             CELG                 *

X----------------- D A D O S  -  B A R R A ------------------------X------------ F L U X O S  -  C I R C U I T O S ------------X
 DA BARRA      TENSAO GERACAO INJ EQV  CARGA   ELO CC  SHUNT    MOTOR
 NUM. KV TIPO   MOD/     MW/     MW/     MW/     MW/   Mvar/     MW/
     NOME       ANG     Mvar    Mvar    Mvar    Mvar   EQUIV    Mvar  PARA BARRA                    FLUXOS
                                                FLUXO % SHUNT L         NUM.     NOME     NC     MW    Mvar  MVA/V_d   TAP  DEFAS TIE
X------------X-------X-------X-------X-------X-------X-------X-------X----X------------X--X-------X-------X-------X------X-----X---X

 780    1  0   1.029     0.0     0.0     0.0     0.0     0.0     0.0
FIRMINOP.138  -105.0     0.0     0.0     0.0     0.0     0.0     0.0
                                                 13.8%                  779 INHUMAS  138  1    14.7    -0.3    14.3
                                                 39.6%                  781 IPORA138       1    42.0    -0.1    40.8
                                                 47.3%                 2992 FIRMINOP-230  1   -72.9    -3.5    70.9
                                                 32.4%                 2993 FIRMINOPO-69  1    16.2     3.9    16.2 0.993*
 781    1  0   0.997     0.0     0.0    16.0     0.0     8.9     0.0
IPORA138      -109.8     0.0     0.0     6.8     0.0     0.0     0.0
                                                 39.8%                  780 FIRMINOP.138  1   -40.8    -2.2    41.0
                                                 50.5%                 2977 IPORA69       1    24.8     4.3    25.3 0.954*
```

```
 782    1  0   1.020     0.0     0.0    12.0     0.0     1.9     0.0
QUIRINOP.138   -86.1     0.0     0.0     4.3     0.0     0.0     0.0
                                              23.5%                 755 C.DOURADA138  1   -20.9    -0.1    20.4
                                               5.8%                 783 RIO VERDE138  1    -4.4    -2.6     5.0
                                              12.7%                3702 CACH.ALTA138  1    13.3     0.3    13.0
 783    1  0   1.022     0.0     0.0    65.5     0.0     7.5     0.0
RIO VERDE138   -85.5     0.0     0.0    27.9     0.0     0.0     0.0
                                              80.9%                 238 R.VERDE--138  1   -70.0   -16.9    70.4                01
                                               6.4%                 782 QUIRINOP.138  1     4.5    -3.5     5.5
 784    1  0   0.992     0.0     0.0    89.9     0.0    10.6     0.0
CATALAO  138   -93.2     0.0     0.0    29.4     0.0     0.0     0.0
                                              48.5%                 321 EMBORCAC-138  1   -89.9   -18.8    92.5                02
 786    1  0   1.023     0.0     0.0     0.0     0.0     0.0     0.0
GOIA138       -104.1     0.0     0.0     0.0     0.0     0.0     0.0
                                              51.5%                 767 MEIAPONTE138  1   -51.4   -17.6    53.1
                                              55.0%                2976 GOIA13        1    17.8     5.4    18.2 0.980F
                                              45.9%                2976 GOIA13        2    14.8     4.5    15.2 0.980F
                                              19.2%                3710 INDEPEND.138  1    18.8     7.6    19.8
 789  230  0   1.021     0.0     0.0     0.0     0.0     0.0     0.0
CODEMIN--230  -106.5     0.0     0.0     0.0     0.0     0.0     0.0
                                              19.8%                 787 NIQUEL---230  1   -48.4   -17.6    50.4                01
                                               0.5%                2982 CODEMIN-13    1    48.4    17.6    50.4 1.000F
 790  230  0   1.027     0.0     0.0     0.0     0.0     0.0     0.0
PLANALTO-230   -89.6     0.0     0.0     0.0     0.0     0.0     0.0
                                              73.0%                 756 C.DOUR-2-230  1  -161.2    34.7   160.6
                                              59.3%                 760 ANHANGUE-230  1   130.4   -31.0   130.5
                                              35.8%                2951 PLANALTO--69  1    15.3    -1.9    15.0 1.014*
                                              36.2%                2951 PLANALTO--69  2    15.5    -1.9    15.2 1.014*
CEPEL - CENTRO DE PESQUISAS DE ENERGIA ELETRICA - PROGRAMA DE ANALISE DE REDES - V08MAR05A                              PAG. 215

ANUAL 06/07 * SETEMBRO 2006 PESADA S/SE 19H N/NE 19H * ANAT0 - FSE - C13
RELATORIO COMPLETO DO SISTEMA * AREA 12 * *             CELG                *

X----------------- D A D O S  -  B A R R A -------------------------X------------ F L U X O S  -  C I R C U I T O S ------------X
 DA BARRA      TENSAO GERACAO INJ EQV  CARGA   ELO CC  SHUNT    MOTOR
 NUM. KV TIPO   MOD/     MW/     MW/     MW/     MW/   Mvar/     MW/
     NOME       ANG     Mvar    Mvar    Mvar    Mvar   EQUIV    Mvar  PARA BARRA                    FLUXOS
                                                FLUXO % SHUNT L         NUM.     NOME     NC     MW    Mvar  MVA/V_d   TAP  DEFAS TIE
X------------X-------X-------X-------X-------X-------X-------X-------X----X------------X--X-------X-------X-------X------X-----X---X

 791    1  0   0.978     0.0     0.0    12.1     0.0     0.0     0.0
P. DAS EMAS    -86.8     0.0     0.0     2.5     0.0     0.0     0.0
                                              14.3%                 249 TAP-RIOCLARO  1     6.2   -10.5    12.5                01
                                              23.4%                4513 C.MAGAL. 138  1   -18.3     8.0    20.4                45
 792  138  0   1.027     0.0     0.0     0.0     0.0     0.0     0.0
SAMA----138   -101.3     0.0     0.0     0.0     0.0     0.0     0.0
                                               0.0%                 247 C.BRAVA--138  1     0.0    -1.0     0.9                01
                                              24.6%                2984 SAMA------13  1    10.1    -0.5     9.9 0.999*
                                               9.7%                2998 MINACU---138  1   -10.1     1.5     9.9
 793  138  0   1.020     0.0     0.0     0.0     0.0     0.0     0.0
PORANGATU138  -105.3     0.0     0.0     0.0     0.0     0.0     0.0
                                              33.4%                 239 S.MESA---138  1   -29.1     3.7    28.8                01
                                               0.1%                1110 CELTINS-FCE   1     7.2    -6.8     9.7                16
                                              43.5%                2983 PORANGATU69   1    11.0     1.6    10.9 0.985*
                                              43.3%                2983 PORANGATU69   2    10.9     1.6    10.8 0.985*
 794    1  0   0.948     0.0     0.0     0.0     0.0     0.0     0.0
PLAN-DF-138   -108.6     0.0     0.0     0.0     0.0     0.0     0.0
                                              27.5%                 796 ITIQUIRA138   1    20.7     2.6    22.0
                                              46.7%                2518 SE ST    138  1   -41.6    -9.0    44.9                13
                                              22.3%                2985 PLANAL.GO138  1    20.9     6.4    23.0
```

```
 795  138  0   1.040     0.0     0.0     0.0     0.0     0.0     0.0
DAIA-138-FIC  -103.0     0.0     0.0     0.0     0.0     0.0     0.0
                                                 0.0%                  3712 SGENOVEVA138  1     0.0     0.0     0.0
 796    1  0   0.935     0.0     0.0     0.0     0.0     0.0     0.0
ITIQUIRA138   -109.6     0.0     0.0     0.0     0.0     0.0     0.0
                                                28.1%                   794 PLAN-DF-138   1   -20.5    -4.5    22.5
                                                68.0%                  2953 ITIQUIRA--34  1    20.5     4.5    22.5 0.895*
 797    1  0   1.005     0.0     0.0     0.0     0.0     0.0     0.0
MARAJOARA138  -100.3     0.0     0.0     0.0     0.0     0.0     0.0
                                                37.0%                   798 PACAEMBU-138  1   -37.8    -6.2    38.1
                                                57.7%                  2952 MARAJOARA-34  1    37.8     6.2    38.1 0.967*
 798    1  0   1.009     0.0     0.0     0.0     0.0     0.0     0.0
PACAEMBU-138   -99.9     0.0     0.0     0.0     0.0     0.0     0.0
                                                36.9%                   797 MARAJOARA138  1    37.9     5.9    38.0
                                                71.4%                   799 PACAEMBU--13  1    21.9     9.2    23.6 0.976*
                                                58.8%                  2524 SE SM    138  1   -59.8   -15.2    61.1              13
 799    1  0   1.001     0.0     0.0    21.9     0.0     0.0     0.0
PACAEMBU--13  -104.8     0.0     0.0     7.1     0.0     0.0     0.0
                                                69.7%                   798 PACAEMBU-138  1   -21.9    -7.1    23.0
CEPEL - CENTRO DE PESQUISAS DE ENERGIA ELETRICA - PROGRAMA DE ANALISE DE REDES - V08MAR05A                                PAG. 216

ANUAL 06/07 * SETEMBRO 2006 PESADA S/SE 19H N/NE 19H * ANAT0 - FSE - C13
RELATORIO COMPLETO DO SISTEMA * AREA 12 * *              CELG                *

X----------------- D A D O S  -  B A R R A ------------------------X------------ F L U X O S  -  C I R C U I T O S ------------X
 DA BARRA      TENSAO GERACAO INJ EQV  CARGA   ELO CC  SHUNT    MOTOR
 NUM. KV TIPO   MOD/     MW/     MW/     MW/     MW/   Mvar/     MW/
     NOME       ANG     Mvar    Mvar    Mvar    Mvar   EQUIV    Mvar  PARA BARRA                    FLUXOS
                                                FLUXO % SHUNT L         NUM.     NOME     NC     MW    Mvar  MVA/V_d   TAP  DEFAS TIE
X------------X-------X-------X-------X-------X-------X-------X-------X----X------------X--X-------X-------X-------X------X-----X---X

 2950    1  0   1.043     0.0     0.0    35.4     0.0    10.4     0.0
 PARANAIBA69    -85.1     0.0     0.0    15.7     0.0     0.0     0.0
                                                34.3%                  2978 PARANAIB-230  1   -17.7    -2.6    17.2
                                                34.3%                  2978 PARANAIB-230  2   -17.7    -2.6    17.2
 2951    1  0   1.029     0.0     0.0    30.8     0.0    17.8     0.0
 PLANALTO--69   -95.0     0.0     0.0    11.0     0.0     0.0     0.0
                                                36.3%                   790 PLANALTO-230  1   -15.3     3.4    15.2
                                                36.7%                   790 PLANALTO-230  2   -15.5     3.4    15.4
 2952    1  0   1.031     0.0     0.0    37.8     0.0    11.5     0.0
 MARAJOARA-34  -104.2     0.0     0.0    15.0     0.0     0.0     0.0
                                                55.8%                   797 MARAJOARA138  1   -37.8    -3.5    36.8
 2953    1  0   1.030     0.0     0.0    20.5     0.0     3.8     0.0
 ITIQUIRA--34  -113.9     0.0     0.0     6.7     0.0     0.0     0.0
                                                60.9%                   796 ITIQUIRA138   1   -20.5    -2.9    20.1
 2954    1  0   1.020     0.0     0.0    27.3     0.0     0.0     0.0
 G.LESTE--13C  -103.0     0.0     0.0    11.7     0.0     0.0     0.0
                                                58.2%                   763 GOIANIA--230  1   -27.3   -11.7    29.1
 2956    1  0   1.036     0.0     0.0    22.7     0.0     5.8     0.0
 ATLANTICO13A  -106.3     0.0     0.0     9.7     0.0     0.0     0.0
                                                67.4%                   772 ATLANTICO138  1   -22.7    -3.9    22.2
 2957    1  0   1.030     0.0     0.0    22.5     0.0     5.7     0.0
 ATLANTICO13B  -106.5     0.0     0.0     9.5     0.0     0.0     0.0
                                                67.1%                   772 ATLANTICO138  1   -22.5    -3.8    22.2
 2958    1  0   0.993     0.0     0.0    28.1     0.0     5.3     0.0
 CAMPINAS-13A  -110.5     0.0     0.0    11.9     0.0     0.0     0.0
                                                88.1%                   773 CAMPINAS 138  1   -28.1    -6.6    29.1
 2959    1  0   1.001     0.0     0.0    28.8     0.0     5.4     0.0
 CAMPINAS-13B  -109.2     0.0     0.0    12.1     0.0     0.0     0.0
                                                92.3%                   773 CAMPINAS 138  1   -28.8    -6.7    29.6
```

```
 2960    1  0   1.020     0.0     0.0    19.0     0.0     5.6     0.0
 G.LESTE--13A  -103.1     0.0     0.0     8.1     0.0     0.0     0.0
                                              52.2%                 763 GOIANIA--230  1   -19.0    -2.5    18.8
 2961    1  0   1.019     0.0     0.0    31.5     0.0     5.6     0.0
 G.LESTE--13B  -103.6     0.0     0.0    13.3     0.0     0.0     0.0
                                              63.6%                 763 GOIANIA--230  1   -31.5    -7.7    31.8
CEPEL - CENTRO DE PESQUISAS DE ENERGIA ELETRICA - PROGRAMA DE ANALISE DE REDES - V08MAR05A                                PAG. 217

ANUAL 06/07 * SETEMBRO 2006 PESADA S/SE 19H N/NE 19H * ANAT0 - FSE - C13
RELATORIO COMPLETO DO SISTEMA * AREA 12 * *              CELG                *

X----------------- D A D O S  -  B A R R A ------------------------X------------ F L U X O S  -  C I R C U I T O S ------------X
 DA BARRA      TENSAO GERACAO INJ EQV  CARGA   ELO CC  SHUNT    MOTOR
 NUM. KV TIPO   MOD/     MW/     MW/     MW/     MW/   Mvar/     MW/
     NOME       ANG     Mvar    Mvar    Mvar    Mvar   EQUIV    Mvar  PARA BARRA                    FLUXOS
                                              FLUXO % SHUNT L         NUM.     NOME     NC     MW    Mvar  MVA/V_d   TAP  DEFAS TIE
X------------X-------X-------X-------X-------X-------X-------X-------X----X------------X--X-------X-------X-------X------X-----X---X

 2962    1  0   1.025     0.0     0.0    18.6     0.0     5.7     0.0
 MEIAPONTE13   -106.6     0.0     0.0     7.8     0.0     0.0     0.0
                                              55.4%                 767 MEIAPONTE138  1   -18.6    -2.1    18.3
 2963    1  0   1.033     0.0     0.0    45.9     0.0    11.5     0.0
 FERROVIAR-13  -108.7     0.0     0.0    19.5     0.0     0.0     0.0
                                              79.1%                 769 FERROVIAR138  1   -45.9    -8.0    45.1
 2964   14  0   1.026     0.0     0.0    16.6     0.0     5.7     0.0
 AEROPORTO13A  -106.8     0.0     0.0     6.6     0.0     0.0     0.0
                                              49.1%                 764 AEROPORTO138  1   -16.6    -0.9    16.2
 2965   14  0   1.043     0.0     0.0    20.3     0.0     5.9     0.0
 AEROPORTO13B  -109.2     0.0     0.0     7.9     0.0     0.0     0.0
                                              59.3%                 764 AEROPORTO138  1   -20.3    -2.0    19.6
 2966    1  0   1.056     0.0     0.0    18.7     0.0     6.0     0.0
 REAL-----13A  -105.1     0.0     0.0     7.9     0.0     0.0     0.0
                                              53.9%                 770 REAL-----138  1   -18.7    -1.9    17.8
 2967    1  0   1.061     0.0     0.0    16.4     0.0     6.1     0.0
 REAL-----13B  -104.3     0.0     0.0     6.9     0.0     0.0     0.0
                                              46.9%                 770 REAL-----138  1   -16.4    -0.8    15.5
 2968    1  0   1.021     0.0     0.0    17.9     0.0     0.0     0.0
 BELAVISTA138  -102.4     0.0     0.0     6.5     0.0     0.0     0.0
                                              37.6%                 761 ANHANGUE-138  1   -38.1   -10.6    38.7
                                              40.4%                2969 BELAVISTA69   1    20.2     4.1    20.2 0.986*
 2969    1  0   1.029     0.0     0.0    20.2     0.0     3.8     0.0
 BELAVISTA69   -104.3     0.0     0.0     7.2     0.0     0.0     0.0
                                              39.8%                2968 BELAVISTA138  1   -20.2    -3.4    19.9
 2970   14  0   1.034     0.0     0.0    21.6     0.0     5.8     0.0
 DAIA13        -111.3     0.0     0.0     7.0     0.0     0.0     0.0
                                              83.7%                 775 DAIA     138  1   -21.6    -1.2    20.9
 2971   14  0   1.029     0.0     0.0    25.2     0.0     5.7     0.0
 JUNDIAI--13   -109.3     0.0     0.0     8.7     0.0     0.0     0.0
                                              37.7%                 776 JUNDIAI-138   1   -12.7    -1.5    12.5
                                              37.0%                 776 JUNDIAI-138   2   -12.5    -1.5    12.2
 2972   14  0   1.029     0.0     0.0    36.1     0.0    11.4     0.0
 ANAPOLIS13    -110.2     0.0     0.0    11.8     0.0     0.0     0.0
                                              70.2%                 777 ANAPOLIS 138  1   -36.1    -0.4    35.1
CEPEL - CENTRO DE PESQUISAS DE ENERGIA ELETRICA - PROGRAMA DE ANALISE DE REDES - V08MAR05A                                PAG. 218

ANUAL 06/07 * SETEMBRO 2006 PESADA S/SE 19H N/NE 19H * ANAT0 - FSE - C13
RELATORIO COMPLETO DO SISTEMA * AREA 12 * *              CELG                *

X----------------- D A D O S  -  B A R R A ------------------------X------------ F L U X O S  -  C I R C U I T O S ------------X
 DA BARRA      TENSAO GERACAO INJ EQV  CARGA   ELO CC  SHUNT    MOTOR
```

```
 NUM. KV TIPO   MOD/     MW/     MW/     MW/     MW/   Mvar/     MW/
     NOME       ANG     Mvar    Mvar    Mvar    Mvar   EQUIV    Mvar  PARA BARRA                    FLUXOS
                                                FLUXO % SHUNT L         NUM.     NOME     NC     MW    Mvar  MVA/V_d   TAP  DEFAS TIE
X------------X-------X-------X-------X-------X-------X-------X-------X----X------------X--X-------X-------X-------X------X-----X---X

 2973    1  0   1.007     0.0     0.0    16.0     0.0     3.7     0.0
 CORUMBA69     -109.8     0.0     0.0     6.7     0.0     0.0     0.0
                                                32.3%                  778 CORUMBA  138  1   -16.0    -3.0    16.2
 2974    1  0   1.031     0.0     0.0    26.7     0.0     0.0     0.0
 AG.LINDAS-69  -103.9     0.0     0.0     8.5     0.0     0.0     0.0
                                                27.2%                 2987 AG.LINDA-230  1   -13.3    -4.3    13.6
                                                27.2%                 2987 AG.LINDA-230  2   -13.3    -4.3    13.6
 2975    1  0   1.043     0.0     0.0    51.5     0.0    11.1     0.0
 INHUMAS69     -109.6     0.0     0.0    18.7     0.0     0.0     0.0
                                                49.5%                  779 INHUMAS  138  1   -25.6    -3.8    24.8
                                                50.3%                  779 INHUMAS  138  2   -25.9    -3.8    25.1
 2976    1  0   1.028     0.0     0.0    32.6     0.0     5.7     0.0
 GOIA13        -107.3     0.0     0.0    13.7     0.0     0.0     0.0
                                                53.9%                  786 GOIA138       1   -17.8    -4.4    17.8
                                                45.0%                  786 GOIA138       2   -14.8    -3.6    14.9
 2977    1  0   1.039     0.0     0.0    24.8     0.0     5.5     0.0
 IPORA69       -111.9     0.0     0.0     8.9     0.0     0.0     0.0
                                                48.2%                  781 IPORA138      1   -24.8    -3.4    24.1
 2978  230  0   1.018     0.0     0.0    10.4     0.0     0.0     0.0
 PARANAIB-230   -83.3     0.0     0.0     4.5     0.0     0.0     0.0
                                                20.4%                  225 ITUMBIAR-230  1   -45.8   -10.9    46.3                01
                                                35.3%                 2950 PARANAIBA69   1    17.7     3.2    17.7 0.971*
                                                35.3%                 2950 PARANAIBA69   2    17.7     3.2    17.7 0.971*
 2980    1  0   1.046     0.0     0.0    30.6     0.0     7.9     0.0
 BARROALTO69   -109.0     0.0     0.0    13.0     0.0     0.0     0.0
                                                59.3%                  229 B.ALTO---230  1   -30.6    -5.1    29.7                01
 2982    1  0   1.000     0.0     0.0     6.4     0.0     0.0     0.0
 CODEMIN-13    -110.1     0.0     0.0     2.0     0.0     0.0     0.0
                                                 0.5%                  789 CODEMIN--230  1   -48.4   -14.3    50.4
                                                 0.4%                 2955 CODEM-LIV-13  1    42.0    12.3    43.7                41
 2983    1  0   1.031     0.0     0.0    21.9     0.0     6.4     0.0
 PORANGATU69   -107.4     0.0     0.0     8.7     0.0     0.0     0.0
                                                42.9%                  793 PORANGATU138  1   -11.0    -1.2    10.7
                                                42.6%                  793 PORANGATU138  2   -10.9    -1.2    10.7
 2984    1  0   1.031     0.0     0.0    10.1     0.0     5.1     0.0
 SAMA------13  -103.5     0.0     0.0     4.2     0.0     0.0     0.0
                                                24.6%                  792 SAMA----138   1   -10.1     0.9     9.8
```





```
X----------------- D A D O S  -  B A R R A ------------------------X------------ F L U X O S  -  C I R C U I T O S ------------X
 DA BARRA       TENSAO GERACAO INJ EQV  CARGA   ELO CC  SHUNT    MOTOR
 NUM. KV TIPO   MOD/     MW/     MW/     MW/     MW/   Mvar/     MW/
     NOME       ANG     Mvar    Mvar    Mvar    Mvar   EQUIV    Mvar  PARA BARRA                    FLUXOS
                                                FLUXO % SHUNT L         NUM.     NOME     NC     MW    Mvar  MVA/V_d   TAP  DEFAS TIE
X------------X-------X-------X-------X-------X-------X-------X-------X----X------------X--X-------X-------X-------X------X-----X---X

 2985    1  0   0.944     0.0     0.0    20.8     0.0     0.0     0.0
 PLANAL.GO138  -109.0     0.0     0.0     6.8     0.0     0.0     0.0
                                                22.5%                  794 PLAN-DF-138   1   -20.8    -6.8    23.2
 2987  230  0   1.040     0.0     0.0     0.0     0.0     0.0     0.0
 AG.LINDA-230  -102.5     0.0     0.0     0.0     0.0     0.0     0.0
                                                37.1%                  228 B.SUL----230  1   -92.1     2.6    88.7                01
```

```
                                                 26.8%                 229 B.ALTO---230  1    65.4   -11.9    64.0                01
                                                 27.2%                2974 AG.LINDAS-69  1    13.3     4.6    13.6 1.000*
                                                 27.2%                2974 AG.LINDAS-69  2    13.3     4.6    13.6 1.000*
 2988  230  0   1.018     0.0     0.0     0.0     0.0     0.0     0.0
 ITAPACI--230  -108.5     0.0     0.0     0.0     0.0     0.0     0.0
                                                 24.0%                 229 B.ALTO---230  1   -52.2   -18.6    54.4                01
                                                 54.4%                2989 ITAPACI--069  1    26.1     9.3    27.2 0.971*
                                                 54.4%                2989 ITAPACI--069  2    26.1     9.3    27.2 0.971*
 2989    1  0   1.032     0.0     0.0    52.2     0.0     6.4     0.0
 ITAPACI--069  -111.2     0.0     0.0    22.2     0.0     0.0     0.0
                                                 52.9%                2988 ITAPACI--230  1   -26.1    -7.9    26.4
                                                 52.9%                2988 ITAPACI--230  2   -26.1    -7.9    26.4
 2990    1  0   1.016     0.0     0.0     0.0     0.0     0.0     0.0
 PALMEIRA-230  -101.5     0.0     0.0     0.0     0.0     0.0     0.0
                                                 39.5%                 760 ANHANGUE-230  1   -88.3    -2.7    87.0
                                                 29.9%                2991 PALMEIRAS-69  1    14.9     3.0    15.0 1.002*
                                                 32.8%                2992 FIRMINOP-230  1    73.4    -0.3    72.3
 2991    1  0   1.009     0.0     0.0    14.9     0.0     3.7     0.0
 PALMEIRAS-69  -103.2     0.0     0.0     6.2     0.0     0.0     0.0
                                                 30.0%                2990 PALMEIRA-230  1   -14.9    -2.5    15.0
 2992    1  0   1.008     0.0     0.0     0.0     0.0     0.0     0.0
 FIRMINOP-230  -103.3     0.0     0.0     0.0     0.0     0.0     0.0
                                                 48.4%                 780 FIRMINOP.138  1    72.9     5.7    72.6 0.977*
                                                 33.0%                2990 PALMEIRA-230  1   -72.9    -5.7    72.6
 2993    1  0   1.029     0.0     0.0    16.2     0.0     1.9     0.0
 FIRMINOPO-69  -106.8     0.0     0.0     5.3     0.0     0.0     0.0
                                                 32.2%                 780 FIRMINOP.138  1   -16.2    -3.4    16.1
 2994    1  0   1.022     0.0     0.0     0.0     0.0     0.0     0.0
 TAP.TRIND138  -105.1     0.0     0.0     0.0     0.0     0.0     0.0
                                                 78.0%                 768 XAVANTES 138  1   -82.0    -5.5    80.3
                                                 62.2%                 779 INHUMAS  138  1    65.4     3.8    64.1
                                                 15.8%                2995 TRINDADE-138  1    16.5     1.7    16.3
CEPEL - CENTRO DE PESQUISAS DE ENERGIA ELETRICA - PROGRAMA DE ANALISE DE REDES - V08MAR05A                                PAG. 220

ANUAL 06/07 * SETEMBRO 2006 PESADA S/SE 19H N/NE 19H * ANAT0 - FSE - C13
RELATORIO COMPLETO DO SISTEMA * AREA 12 * *             CELG                *

X------------------ D A D O S  -  B A R R A -------------------------X------------- F L U X O S  -  C I R C U I T O S -------------X
 DA BARRA      TENSAO GERACAO INJ EQV  CARGA   ELO CC  SHUNT    MOTOR
 NUM. KV TIPO   MOD/     MW/     MW/     MW/     MW/   Mvar/     MW/
     NOME       ANG     Mvar    Mvar    Mvar    Mvar   EQUIV    Mvar  PARA BARRA                    FLUXOS
                                                FLUXO % SHUNT L         NUM.     NOME     NC     MW    Mvar  MVA/V_d   TAP  DEFAS TIE
X------------X-------X-------X-------X-------X-------X-------X-------X----X------------X--X-------X-------X-------X------X-----X---X

 2995    1  0   1.019     0.0     0.0     0.0     0.0     0.0     0.0
 TRINDADE-138  -105.4     0.0     0.0     0.0     0.0     0.0     0.0
                                                 15.9%                2994 TAP.TRIND138  1   -16.5    -2.6    16.4
                                                 65.5%                2996 TRINDADE--13  1    16.5     2.6    16.4 0.983*
 2996    1  0   1.029     0.0     0.0    16.5     0.0     3.8     0.0
 TRINDADE--13  -108.7     0.0     0.0     5.4     0.0     0.0     0.0
                                                 64.4%                2995 TRINDADE-138  1   -16.5    -1.6    16.1
 2998  138  0   1.027     0.0     0.0     0.0     0.0     0.0     0.0
 MINACU---138  -101.3     0.0     0.0     0.0     0.0     0.0     0.0
                                                 17.4%                 239 S.MESA---138  1   -15.4     0.2    15.0                01
                                                  9.7%                 792 SAMA----138   1    10.1    -1.9    10.0
                                                 21.7%                2999 MINACU----13  1     5.3     1.7     5.4 0.990*
 2999    1  0   1.031     0.0     0.0     5.3     0.0     0.0     0.0
 MINACU----13  -102.4     0.0     0.0     1.6     0.0     0.0     0.0
                                                 21.5%                2998 MINACU---138  1    -5.3    -1.6     5.4
 3700    1  0   1.031     0.0     0.0     6.5     0.0     0.0     0.0
```

```
 RIOBOIS--138   -84.6     0.0     0.0     2.0     0.0     0.0     0.0
                                                 0.1%                 248 TAP-RIOBOIS   1    -6.5    -2.0     6.6                01
 3701    1  0   0.991     0.0     0.0    33.4     0.0     7.7     0.0
 RIOCLARO-138   -88.0     0.0     0.0    10.9     0.0     0.0     0.0
                                                38.9%                 249 TAP-RIOCLARO  1   -33.4    -3.2    33.9                01
 3702    1  0   1.010     0.0     0.0    13.2     0.0     0.0     0.0
 CACH.ALTA138   -87.1     0.0     0.0     4.3     0.0     0.0     0.0
                                                13.3%                 782 QUIRINOP.138  1   -13.2    -4.3    13.7
 3703    1  0   1.028     0.0     0.0     0.0     0.0     0.0     0.0
 TAPPERDIG138   -85.1     0.0     0.0     0.0     0.0     0.0     0.0
                                                10.7%                 238 R.VERDE--138  1   -10.9    -3.2    11.1                01
                                                10.3%                3704 PERDIGAO-138  1    10.2     3.7    10.6
                                                 0.8%                3705 GESSYLEVE138  1     0.7    -0.5     0.8
 3704    1  0   1.026     0.0     0.0    10.2     0.0     0.0     0.0
 PERDIGAO-138   -85.2     0.0     0.0     4.4     0.0     0.0     0.0
                                                10.5%                3703 TAPPERDIG138  1   -10.2    -4.4    10.8
 3705    1  0   1.028     0.0     0.0     0.7     0.0     0.0     0.0
 GESSYLEVE138   -85.1     0.0     0.0     0.3     0.0     0.0     0.0
                                                 0.7%                3703 TAPPERDIG138  1    -0.7    -0.3     0.7
 3706  138  0   1.013     0.0     0.0    22.6     0.0     6.2     0.0
 ACREUNA--138   -87.8     0.0     0.0     8.2     0.0     0.0     0.0
                                                21.7%                 238 R.VERDE--138  1   -22.6    -2.0    22.4                01
CEPEL - CENTRO DE PESQUISAS DE ENERGIA ELETRICA - PROGRAMA DE ANALISE DE REDES - V08MAR05A                                PAG. 221

ANUAL 06/07 * SETEMBRO 2006 PESADA S/SE 19H N/NE 19H * ANAT0 - FSE - C13
RELATORIO COMPLETO DO SISTEMA * AREA 12 * *              CELG                *

X----------------- D A D O S  -  B A R R A -------------------------X------------ F L U X O S  -  C I R C U I T O S ------------X
 DA BARRA      TENSAO GERACAO INJ EQV  CARGA   ELO CC  SHUNT    MOTOR
 NUM. KV TIPO   MOD/     MW/     MW/     MW/     MW/   Mvar/     MW/
     NOME       ANG     Mvar    Mvar    Mvar    Mvar   EQUIV    Mvar  PARA BARRA                    FLUXOS
                                                FLUXO % SHUNT L         NUM.     NOME     NC     MW    Mvar  MVA/V_d   TAP  DEFAS TIE
X------------X-------X-------X-------X-------X-------X-------X-------X----X------------X--X-------X-------X-------X------X-----X---X

 3709    1  0   1.030     0.0     0.0     8.7     0.0     0.0     0.0
 ANHANGUER69A  -102.2     0.0     0.0     3.4     0.0     0.0     0.0
                                                36.3%                 761 ANHANGUE-138  1    -8.7    -3.4     9.1
 3710    1  0   1.013     0.0     0.0     0.0     0.0     0.0     0.0
 INDEPEND.138  -104.7     0.0     0.0     0.0     0.0     0.0     0.0
                                                20.1%                 786 GOIA138       1   -18.7    -9.5    20.7
                                                62.7%                3711 INDEPENDEN13  1    18.7     9.5    20.7 0.954*
 3711    1  0   1.029     0.0     0.0    18.7     0.0     0.0     0.0
 INDEPENDEN13  -108.7     0.0     0.0     7.9     0.0     0.0     0.0
                                                59.8%                3710 INDEPEND.138  1   -18.7    -7.9    19.7
 3712  138  0   1.038     0.0     0.0     0.0     0.0     0.0     0.0
 SGENOVEVA138  -103.0     0.0     0.0     0.0     0.0     0.0     0.0
                                                16.2%                 768 XAVANTES 138  1   -16.7    -4.7    16.7
                                                 3.5%                 795 DAIA-138-FIC  1     0.0    -3.7     3.6
                                                54.7%                3713 SGENOVEVA-13  1    16.7     8.4    18.0 0.979*
 3713   14  0   1.030     0.0     0.0    16.7     0.0     0.0     0.0
 SGENOVEVA-13  -106.5     0.0     0.0     7.2     0.0     0.0     0.0
                                                53.5%                3712 SGENOVEVA138  1   -16.7    -7.2    17.7
 3719    1  0   1.030     0.0     0.0    14.6     0.0     0.0     0.0
 AEROPORTO13C  -107.0     0.0     0.0     6.2     0.0     0.0     0.0
                                                46.7%                 764 AEROPORTO138  1   -14.6    -6.2    15.4
 3720    1  0   0.997     0.0     0.0    27.6     0.0     0.0     0.0
 ATLANTICO13C  -107.5     0.0     0.0    11.8     0.0     0.0     0.0
                                                91.2%                 772 ATLANTICO138  1   -27.6   -11.8    30.1
 3721  138  0   1.027     0.0     0.0     0.0     0.0     0.0     0.0
 SANTANA--138  -106.1     0.0     0.0     0.0     0.0     0.0     0.0
```

```
                                                   44.9%                 776 JUNDIAI-138   1    47.0     6.6    46.2
                                                   24.8%                 777 ANAPOLIS 138  1    26.1     1.4    25.5
                                                   24.8%                 777 ANAPOLIS 138  2    26.1     1.4    25.5
                                                   53.8%                3722 SANTANA---13  1    15.4     9.8    17.8 0.964*
                                                   36.3%                3724 PIRINEUS-138  1   -57.3    -9.6    56.6
                                                   36.3%                3724 PIRINEUS-138  2   -57.3    -9.6    56.6
 3722   14  0   1.030     0.0     0.0    15.4     0.0     0.0     0.0
 SANTANA---13  -109.3     0.0     0.0     8.6     0.0     0.0     0.0
                                                   51.9%                3721 SANTANA--138  1   -15.4    -8.6    17.1
CEPEL - CENTRO DE PESQUISAS DE ENERGIA ELETRICA - PROGRAMA DE ANALISE DE REDES - V08MAR05A                          PAG. 222

ANUAL 06/07 * SETEMBRO 2006 PESADA S/SE 19H N/NE 19H * ANAT0 - FSE - C13
RELATORIO COMPLETO DO SISTEMA * AREA 12 * *             CELG                *

X----------------- D A D O S  -  B A R R A -------------------------X------------ F L U X O S  -  C I R C U I T O S ------------X
 DA BARRA      TENSAO GERACAO INJ EQV  CARGA   ELO CC  SHUNT    MOTOR
 NUM. KV TIPO   MOD/     MW/     MW/     MW/     MW/   Mvar/     MW/
     NOME       ANG     Mvar    Mvar    Mvar    Mvar   EQUIV    Mvar  PARA BARRA                    FLUXOS
                                                FLUXO % SHUNT L         NUM.     NOME     NC     MW    Mvar  MVA/V_d   TAP  DEFAS TIE
X------------X-------X-------X-------X-------X-------X-------X-------X----X------------X--X-------X-------X-------X------X-----X---X

 3723  230  0   1.004     0.0     0.0     0.0     0.0     0.0     0.0
 PIRINEUS-230  -103.3     0.0     0.0     0.0     0.0     0.0     0.0
                                                   14.5%                 227 B.GERAL--230  1   -17.8   -32.5    37.0                01
                                                   38.0%                 766 XAVANTES-230  1   -97.0     8.4    97.0
                                                   52.0%                3724 PIRINEUS-138  1   114.9    24.2   116.9 0.967*
 3724  138  0   1.030     0.0     0.0     0.0     0.0     0.0     0.0
 PIRINEUS-138  -105.7     0.0     0.0     0.0     0.0     0.0     0.0
                                                   36.2%                3721 SANTANA--138  1    57.4     9.6    56.5
                                                   36.2%                3721 SANTANA--138  2    57.4     9.6    56.5
                                                   50.3%                3723 PIRINEUS-230  1  -114.9   -19.3   113.1
 3726    1  0   1.003     0.0     0.0     0.0     0.0     0.0     0.0
 MARAJO.138NA  -102.8     0.0     0.0     0.0     0.0     0.0     0.0
                                                    0.0%                3727 RIOVERME.138  1     0.0     0.0     0.0
 3727    1  0   1.002     0.0     0.0     0.0     0.0     0.0     0.0
 RIOVERME.138  -102.8     0.0     0.0     0.0     0.0     0.0     0.0
                                                    0.5%                 237 SAMAMBAI-138  1   -47.3   -10.8    48.4                01
                                                    1.0%                3726 MARAJO.138NA  1     0.0    -1.0     1.0
                                                   68.5%                3728 RIOVERMELH13  1    20.4     9.8    22.6 0.951*
                                                    0.3%                3729 PAMPLONA-138  1    26.9     2.0    26.9
 3728    1  0   1.020     0.0     0.0    20.4     0.0     0.0     0.0
 RIOVERMELH13  -107.2     0.0     0.0     8.0     0.0     0.0     0.0
                                                   65.1%                3727 RIOVERME.138  1   -20.4    -8.0    21.5
 3729    1  0   0.989     0.0     0.0    26.6     0.0     7.0     0.0
 PAMPLONA-138  -104.5     0.0     0.0    11.3     0.0     0.0     0.0
                                                    0.3%                3727 RIOVERME.138  1   -26.6    -4.3    27.2
 3735    1  0   1.042     0.0     0.0     0.0     0.0     0.0     0.0
 TAPPETROB138  -100.7     0.0     0.0     0.0     0.0     0.0     0.0
                                                    6.5%                 761 ANHANGUE-138  1    -6.9     0.7     6.7
                                                    6.8%                3736 PETROBRAS138  1     6.9     2.3     7.0
                                                    2.8%                3740 DAIA-PETR138  1     0.0    -3.0     2.9
 3736    1  0   1.041     0.0     0.0     1.5     0.0     0.0     0.0
 PETROBRAS138  -100.8     0.0     0.0     0.6     0.0     0.0     0.0
                                                    6.9%                3735 TAPPETROB138  1    -6.9    -2.7     7.1
                                                    5.4%                3738 SENCANED-138  1     5.4     2.1     5.6
 3737    1  0   1.020     0.0     0.0     5.4     0.0     0.0     0.0
 SENCANEDO-13  -102.0     0.0     0.0     2.1     0.0     0.0     0.0
                                                    5.5%                3738 SENCANED-138  1    -5.4    -2.1     5.7
CEPEL - CENTRO DE PESQUISAS DE ENERGIA ELETRICA - PROGRAMA DE ANALISE DE REDES - V08MAR05A                          PAG. 223
```

ANUAL 06/07 * SETEMBRO 2006 PESADA S/SE 19H N/NE 19H * ANAT0 - FSE - C13
RELATORIO COMPLETO DO SISTEMA * AREA 12 * * CELG *

| DADOS - BARRA | | | | | | | | | FLUXOS - CIRCUITOS | | | | | | | |
|---|---|---|---|---|---|---|---|---|---|---|---|---|---|---|---|---|
| DA BARRA NUM. NOME | KV | TIPO | TENSAO MOD/ ANG | GERACAO MW/ Mvar | INJ EQV MW/ Mvar | CARGA MW/ Mvar | ELO CC MW/ Mvar | SHUNT Mvar/ EQUIV | MOTOR MW/ Mvar | PARA BARRA NUM. | NOME | NC | MW | FLUXOS Mvar | MVA/V_d | TAP | DEFAS | TIE |
| | | | | | | | FLUXO % | SHUNT L | | | | | | | | | | |
| 3738 | 1 | 0 | 1.041 | 0.0 | 0.0 | 0.0 | 0.0 | 0.0 | 0.0 | | | | | | | | | |
| SENCANED-138 | | | -100.8 | 0.0 | 0.0 | 0.0 | 0.0 | 0.0 | 0.0 | | | | | | | | | |
| | | | | | | | 5.5% | | | 3736 | PETROBRAS138 | 1 | -5.4 | -2.2 | 5.6 | | | |
| | | | | | | | 5.5% | | | 3737 | SENCANEDO-13 | 1 | 5.4 | 2.2 | 5.6 | 1.012* | | |
| 3740 | 138 | 0 | 1.043 | 0.0 | 0.0 | 0.0 | 0.0 | 0.0 | 0.0 | | | | | | | | | |
| DAIA-PETR138 | | | -100.8 | 0.0 | 0.0 | 0.0 | 0.0 | 0.0 | 0.0 | | | | | | | | | |
| | | | | | | | 0.0% | | | 3735 | TAPPETROB138 | 1 | 0.0 | 0.0 | 0.0 | | | |

TOTAIS DA AREA 12

| GERACAO MW/ Mvar | INJ EQV MW/ Mvar | CARGA MW/ Mvar | ELO CC MW/ Mvar | SHUNT Mvar/ EQUIV | EXPORT MW/ Mvar | IMPORT MW/ Mvar | PERDAS MW/ Mvar |
|---|---|---|---|---|---|---|---|
| 526.0 | 0.0 | 1444.1 | 0.0 | 268.4 | 301.0 | 1256.6 | 37.4 |
| -28.4 | 0.0 | 558.3 | 0.0 | 0.0 | 48.0 | 442.2 | 76.0 |



ANUAL 06/07 * SETEMBRO 2006 PESADA S/SE 19H N/NE 19H * ANAT0 - FSE - C13
RELATORIO COMPLETO DO SISTEMA * AREA 13 * * CEB *

| DADOS - BARRA | | | | | | | | | FLUXOS - CIRCUITOS | | | | | | | |
|---|---|---|---|---|---|---|---|---|---|---|---|---|---|---|---|---|
| DA BARRA NUM. NOME | KV | TIPO | TENSAO MOD/ ANG | GERACAO MW/ Mvar | INJ EQV MW/ Mvar | CARGA MW/ Mvar | ELO CC MW/ Mvar | SHUNT Mvar/ EQUIV | MOTOR MW/ Mvar | PARA BARRA NUM. | NOME | NC | MW | FLUXOS Mvar | MVA/V_d | TAP | DEFAS | TIE |
| | | | | | | | FLUXO % | SHUNT L | | | | | | | | | | |
| 2501 | 1 | 0 | 1.015 | 0.0 | 0.0 | 0.0 | 0.0 | 0.0 | 0.0 | | | | | | | | | |
| SE AC | 138 | | -103.3 | 0.0 | 0.0 | 0.0 | 0.0 | 0.0 | 0.0 | | | | | | | | | |
| | | | | | | | 69.5% | | | 236 | B.SUL----138 | 1 | -108.6 | -30.7 | 111.2 | | | 01 |
| | | | | | | | 49.6% | | | 2513 | SE BN 138 | 1 | 80.9 | 22.9 | 82.8 | | | |
| | | | | | | | 44.3% | | | 3604 | SE AC 13.8 | 1 | 13.9 | 3.9 | 14.2 | | | |
| | | | | | | | 44.3% | | | 3604 | SE AC 13.8 | 2 | 13.8 | 3.9 | 14.2 | | | |
| 2502 | 1 | 0 | 1.014 | 0.0 | 0.0 | 0.0 | 0.0 | 0.0 | 0.0 | | | | | | | | | |
| SE TG | 138 | | -103.3 | 0.0 | 0.0 | 0.0 | 0.0 | 0.0 | 0.0 | | | | | | | | | |
| | | | | | | | 55.6% | | | 236 | B.SUL----138 | 1 | -85.1 | -29.7 | 88.9 | | | 01 |
| | | | | | | | 55.6% | | | 236 | B.SUL----138 | 2 | -85.1 | -29.7 | 88.9 | | | 01 |
| | | | | | | | 1.8% | | | 2503 | SE RB 138 | 1 | 2.1 | -1.0 | 2.3 | | | |
| | | | | | | | 35.1% | | | 2505 | E_CN01 138 | 1 | 44.1 | 6.3 | 43.9 | | | |
| | | | | | | | 6.4% | | | 2506 | E_CN02 138 | 1 | 8.0 | -1.2 | 8.0 | | | |
| | | | | | | | 97.7% | | | 2554 | SE TG 34.5 | 1 | 33.2 | 21.7 | 39.1 | 0.936* | | |
| | | | | | | | 97.7% | | | 2554 | SE TG 34.5 | 2 | 33.2 | 21.7 | 39.1 | 0.936* | | |
| | | | | | | | 78.3% | | | 3601 | SE TG 13.8 | 1 | 24.7 | 6.0 | 25.1 | | | |
| | | | | | | | 79.3% | | | 3601 | SE TG 13.8 | 2 | 25.0 | 6.0 | 25.4 | | | |

```
 2503    1  0   1.013     0.0     0.0     2.1     0.0     0.0     0.0
 SE RB    138  -103.4     0.0     0.0     0.9     0.0     0.0     0.0
                                                 1.8%                 2502 SE TG    138  1    -2.1    -0.9     2.3
 2504    1  0   1.012     0.0     0.0     8.0     0.0     0.0     0.0
 SE RD    138  -103.6     0.0     0.0     0.4     0.0     0.0     0.0
                                                 0.0%                 2505 E_CN01   138  1     0.0     0.0     0.0
                                                 6.3%                 2506 E_CN02   138  1    -8.0    -0.4     7.9
 2505    1  0   1.006     0.0     0.0     0.0     0.0     0.0     0.0
 E_CN01   138  -104.1     0.0     0.0     0.0     0.0     0.0     0.0
                                                35.2%                 2502 SE TG    138  1   -43.8    -6.5    44.0
                                                 0.0%                 2504 SE RD    138  1     0.0     0.0     0.0
                                                35.2%                 2507 SE CN    138  1    43.8     6.5    44.0
 2506    1  0   1.013     0.0     0.0     0.0     0.0     0.0     0.0
 E_CN02   138  -103.5     0.0     0.0     0.0     0.0     0.0     0.0
                                                 6.3%                 2502 SE TG    138  1    -8.0     0.3     7.9
                                                 6.3%                 2504 SE RD    138  1     8.0    -0.3     7.9
                                                 0.0%                 2507 SE CN    138  1     0.0     0.0     0.0
 2507    1  0   1.006     0.0     0.0     0.0     0.0     0.0     0.0
 SE CN    138  -104.1     0.0     0.0     0.0     0.0     0.0     0.0
                                                35.2%                 2505 E_CN01   138  1   -43.8    -6.5    44.0
                                                 0.0%                 2506 E_CN02   138  1     0.0     0.0     0.0
                                                68.6%                 3602 SE CN   13.8  1    21.9     3.2    22.0
                                                68.9%                 3602 SE CN   13.8  2    21.9     3.2    22.1
CEPEL - CENTRO DE PESQUISAS DE ENERGIA ELETRICA - PROGRAMA DE ANALISE DE REDES - V08MAR05A                                PAG. 225

ANUAL 06/07 * SETEMBRO 2006 PESADA S/SE 19H N/NE 19H * ANAT0 - FSE - C13
RELATORIO COMPLETO DO SISTEMA * AREA 13 * *              CEB                *

X----------------- D A D O S  -  B A R R A ------------------------X------------ F L U X O S  -  C I R C U I T O S ------------X
 DA BARRA      TENSAO GERACAO INJ EQV  CARGA   ELO CC  SHUNT    MOTOR
 NUM. KV TIPO   MOD/     MW/     MW/     MW/     MW/   Mvar/     MW/
     NOME       ANG     Mvar    Mvar    Mvar    Mvar   EQUIV    Mvar  PARA BARRA                    FLUXOS
                                                FLUXO % SHUNT L         NUM.     NOME     NC      MW    Mvar  MVA/V_d   TAP  DEFAS TIE
X------------X-------X-------X-------X-------X-------X-------X-------X----X------------X--X-------X-------X-------X------X-----X---X

 2508    1  0   1.020     0.0     0.0     0.0     0.0     0.0     0.0
 SE CS    138  -102.9     0.0     0.0     0.0     0.0     0.0     0.0
                                                23.7%                  236 B.SUL----138  1   -37.6    -9.3    37.9               01
                                                23.7%                  236 B.SUL----138  2   -37.6    -9.3    37.9               01
                                                61.4%                 2531 SE CS     69  1    28.2    13.6    30.7 0.975F
                                                48.5%                 3603 SE CS   13.8  1    15.7     1.7    15.5
                                                48.0%                 3603 SE CS   13.8  2    15.6     1.7    15.4
                                                48.0%                 3603 SE CS   13.8  3    15.6     1.7    15.4
 2513    1  0   0.998     0.0     0.0     0.0     0.0     0.0     0.0
 SE BN    138  -104.9     0.0     0.0     0.0     0.0     0.0     0.0
                                                55.9%                  236 B.SUL----138  1   -86.3   -22.8    89.5               01
                                                55.9%                  236 B.SUL----138  2   -86.3   -22.8    89.5               01
                                                53.5%                  237 SAMAMBAI-138  1   -85.1    -7.2    85.6               01
                                                49.8%                 2501 SE AC    138  1   -80.1   -21.3    83.1
                                                27.7%                 2514 SE BC    138  1    44.2    -1.6    44.3
                                                27.7%                 2514 SE BC    138  2    44.2    -1.6    44.3
                                                75.7%                 2518 SE ST    138  1    78.7    26.8    83.3
                                                16.5%                 2519 SE CT    138  1    25.8     5.4    26.4
                                                74.3%                 2592 BNFIC01 34.5  1    47.5    14.7    49.8 0.947*
                                                73.5%                 2593 BNFIC02 34.5  1    46.9    14.5    49.2 0.947*
                                                79.2%                 2594 BNFIC03 34.5  1    50.6    15.7    53.1 0.947*
 2514    1  0   0.994     0.0     0.0     0.0     0.0     0.0     0.0
 SE BC    138  -105.9     0.0     0.0     0.0     0.0     0.0     0.0
                                                27.7%                 2513 SE BN    138  1   -44.0     1.3    44.3
                                                27.7%                 2513 SE BN    138  2   -44.0     1.3    44.3
```

```
                                                  14.4%                 2521 SE-ES    138  1    26.0     5.2    26.7
                                                  69.8%                 2573 SE BC   34.5  1    27.5    -3.9    27.9 0.988*
                                                  36.9%                 3625 SE BC   13.8  1    11.7    -1.3    11.8
                                                  36.1%                 3625 SE BC   13.8  2    11.4    -1.3    11.6
                                                  36.1%                 3625 SE BC   13.8  3    11.4    -1.3    11.6
 2517    1  0   0.991     0.0     0.0    12.3     0.0     0.0     0.0
 E_TOCT   138  -105.6     0.0     0.0     5.2     0.0     0.0     0.0
                                                   8.1%                 2519 SE CT    138  1   -12.3    -5.2    13.5
 2518    1  0   0.966     0.0     0.0     0.0     0.0     0.0     0.0
 SE ST    138  -107.3     0.0     0.0     0.0     0.0     0.0     0.0
                                                  46.4%                  794 PLAN-DF-138   1    42.2     8.6    44.6              12
                                                  76.2%                 2513 SE BN    138  1   -77.2   -24.2    83.8
                                                  79.5%                 2535 SE ST     69  1    17.5     7.8    19.9 0.950F
                                                  79.5%                 2535 SE ST     69  2    17.5     7.8    19.9 0.950F
CEPEL - CENTRO DE PESQUISAS DE ENERGIA ELETRICA - PROGRAMA DE ANALISE DE REDES - V08MAR05A                                PAG. 226

ANUAL 06/07 * SETEMBRO 2006 PESADA S/SE 19H N/NE 19H * ANAT0 - FSE - C13
RELATORIO COMPLETO DO SISTEMA * AREA 13 * *                CEB                *

X----------------- D A D O S  -  B A R R A -------------------------X------------ F L U X O S  -  C I R C U I T O S ------------X
 DA BARRA      TENSAO GERACAO INJ EQV  CARGA   ELO CC  SHUNT    MOTOR
 NUM. KV TIPO   MOD/     MW/     MW/     MW/     MW/   Mvar/     MW/
     NOME       ANG     Mvar    Mvar    Mvar    Mvar   EQUIV    Mvar  PARA BARRA                    FLUXOS
                                                FLUXO % SHUNT L        NUM.     NOME     NC     MW    Mvar  MVA/V_d   TAP  DEFAS TIE
X------------X-------X-------X-------X-------X-------X-------X-------X----X------------X--X-------X-------X-------X------X-----X---X

 2519    1  0   0.992     0.0     0.0     0.0     0.0     0.0     0.0
 SE CT    138  -105.5     0.0     0.0     0.0     0.0     0.0     0.0
                                                  16.7%                 2513 SE BN    138  1   -25.7    -6.2    26.7
                                                   8.0%                 2517 E_TOCT   138  1    12.3     4.9    13.4
                                                  42.4%                 3627 SE CT   13.8  1    13.4     1.3    13.6
 2521  138  0   0.992     0.0     0.0     0.0     0.0     0.0     0.0
 SE-ES    138  -106.1     0.0     0.0     0.0     0.0     0.0     0.0
                                                  14.4%                 2514 SE BC    138  1   -26.0    -5.5    26.8
                                                  41.9%                 3632 SE-ES   13.8  1    13.0     2.8    13.4
                                                  41.9%                 3632 SE-ES   13.8  2    13.0     2.8    13.4
 2523    1  0   1.020     0.0     0.0     0.0     0.0     0.0     0.0
 SE MJ    138  -100.2     0.0     0.0     0.0     0.0     0.0     0.0
                                                  18.5%                  237 SAMAMBAI-138  1    -2.5   -30.1    29.6              01
                                                  20.0%                 2524 SE SM    138  1   -23.3    22.8    32.0
                                                  41.1%                 3638 SE MJ   13.8  1    12.9     3.6    13.1
                                                  41.1%                 3638 SE MJ   13.8  2    12.9     3.6    13.1
 2524    1  0   1.013     0.0     0.0     0.0     0.0     0.0     0.0
 SE SM    138   -99.5     0.0     0.0     0.0     0.0     0.0     0.0
                                                  58.7%                  798 PACAEMBU-138  1    59.9    15.3    61.1              12
                                                  20.5%                 2523 SE MJ    138  1    23.4   -23.5    32.8
                                                  22.9%                 2526 CORUMBA4-138  1  -101.8     3.2   100.5
                                                  58.9%                 3639 SE SM   13.8  1    18.4     5.0    18.8
 2526  138  0   1.023     0.0     0.0     0.0     0.0     0.0     0.0
 CORUMBA4-138   -96.3     0.0     0.0     0.0     0.0     0.0     0.0
                                                  22.9%                 2524 SE SM    138  1   103.0    -2.8   100.7
                                                  75.2%                 3641 CORUMBA4-1GR  1   -51.5     1.4    50.4 1.025F
                                                  75.2%                 3641 CORUMBA4-1GR  2   -51.5     1.4    50.4 1.025F
 2531    1  0   1.014     0.0     0.0     0.0     0.0     0.0     0.0
 SE CS     69  -107.0     0.0     0.0     0.0     0.0     0.0     0.0
                                                  59.9%                 2508 SE CS    138  1   -28.2   -11.2    29.9
                                                  34.0%                 2532 E_CSNB    69  1    28.2    11.2    29.9
 2532    1  0   1.000     0.0     0.0     0.0     0.0     0.0     0.0
 E_CSNB    69  -107.7     0.0     0.0     0.0     0.0     0.0     0.0
                                                  34.1%                 2531 SE CS     69  1   -28.0   -10.8    30.0
```

```
                                                  34.1%                 2533 SE NB     69  1    28.0    10.8    30.0
 2533    1  0   0.979     0.0     0.0     0.0     0.0     0.0     0.0
 SE NB     69  -108.9     0.0     0.0     0.0     0.0     0.0     0.0
                                                  34.2%                 2532 E_CSNB    69  1   -27.6   -10.2    30.1
                                                  77.1%                 3608 SE NB   13.8  1     9.2     3.4    10.0
                                                  77.1%                 3608 SE NB   13.8  2     9.2     3.4    10.0
                                                  77.1%                 3608 SE NB   13.8  3     9.2     3.4    10.0
CEPEL - CENTRO DE PESQUISAS DE ENERGIA ELETRICA - PROGRAMA DE ANALISE DE REDES - V08MAR05A                                PAG. 227

ANUAL 06/07 * SETEMBRO 2006 PESADA S/SE 19H N/NE 19H * ANAT0 - FSE - C13
RELATORIO COMPLETO DO SISTEMA * AREA 13 * *              CEB                *

X----------------- D A D O S  -  B A R R A -------------------------X------------ F L U X O S  -  C I R C U I T O S ------------X
 DA BARRA      TENSAO GERACAO INJ EQV  CARGA   ELO CC  SHUNT    MOTOR
 NUM. KV TIPO   MOD/     MW/     MW/     MW/     MW/   Mvar/     MW/
     NOME       ANG     Mvar    Mvar    Mvar    Mvar   EQUIV    Mvar  PARA BARRA                    FLUXOS
                                                FLUXO % SHUNT L         NUM.     NOME     NC     MW    Mvar  MVA/V_d   TAP  DEFAS TIE
X------------X-------X-------X-------X-------X-------X-------X-------X----X------------X--X-------X-------X-------X------X-----X---X

 2535    1  0   0.972     0.0     0.0     0.0     0.0     0.0     0.0
 SE ST     69  -114.1     0.0     0.0     0.0     0.0     0.0     0.0
                                                  75.5%                 2518 SE ST    138  1   -17.5    -5.4    18.9
                                                  75.5%                 2518 SE ST    138  2   -17.5    -5.4    18.9
                                                  29.4%                 2536 SE PL     69  1    14.8     5.2    16.2
                                                  29.4%                 2536 SE PL     69  2    14.8     5.2    16.2
                                                  15.4%                 2537 SE PD     69  1     5.4     0.4     5.5
 2536    1  0   0.955     0.0     0.0     0.0     0.0     0.0     0.0
 SE PL     69  -115.0     0.0     0.0     0.0     0.0     0.0     0.0
                                                  29.6%                 2535 SE ST     69  1   -14.6    -5.1    16.3
                                                  29.6%                 2535 SE ST     69  2   -14.6    -5.1    16.3
                                                  83.4%                 3629 SE PL   13.8  1     9.8     3.4    10.8
                                                  83.4%                 3629 SE PL   13.8  2     9.8     3.4    10.8
                                                  83.4%                 3629 SE PL   13.8  3     9.8     3.4    10.8
 2537    1  0   0.956     0.0     0.0     0.0     0.0     0.0     0.0
 SE PD     69  -115.5     0.0     0.0     0.0     0.0     0.0     0.0
                                                  15.9%                 2535 SE ST     69  1    -5.3    -1.4     5.7
                                                  47.8%                 3630 SE PD   13.8  1     2.6     0.7     2.9
                                                  47.8%                 3630 SE PD   13.8  2     2.6     0.7     2.9
 2541    1  0   0.974     0.0     0.0     0.0     0.0     0.0     0.0
 SE 01   34.5  -108.3     0.0     0.0     0.0     0.0     0.0     0.0
                                                  73.1%                  221 B.GERAL-34.5  1   -17.1     0.4    17.5              01
                                                  73.1%                  221 B.GERAL-34.5  2   -17.1     0.4    17.5              01
                                                  73.1%                  221 B.GERAL-34.5  3   -17.1     0.4    17.5              01
                                                  73.9%                 2543 SE 05   34.5  1     8.5    -1.3     8.9
                                                  58.3%                 3613 SE 01   13.8  1    14.2     0.0    14.6 1.000F
                                                  61.6%                 3613 SE 01   13.8  2    15.0     0.0    15.4 1.000F
                                                  55.5%                 3613 SE 01   13.8  3    13.5     0.0    13.9 1.000F
 2542    1  0   0.980     0.0     0.0     0.0     0.0     0.0     0.0
 SE 02   34.5  -108.3     0.0     0.0     0.0     0.0     0.0     0.0
                                                  52.2%                  221 B.GERAL-34.5  1   -12.1     2.0    12.5              01
                                                  52.2%                  221 B.GERAL-34.5  2   -12.1     2.0    12.5              01
                                                  52.2%                  221 B.GERAL-34.5  3   -12.1     2.0    12.5              01
                                             SUP 126.2%                 2543 SE 05   34.5  1    14.4     3.5    15.1
                                                  31.6%                 3614 SE 02   13.8  1     7.1    -3.1     7.9 1.000F
                                                  31.8%                 3614 SE 02   13.8  2     7.1    -3.1     8.0 1.000F
                                                  34.0%                 3614 SE 02   13.8  3     7.6    -3.3     8.5 1.000F
CEPEL - CENTRO DE PESQUISAS DE ENERGIA ELETRICA - PROGRAMA DE ANALISE DE REDES - V08MAR05A                                PAG. 228

ANUAL 06/07 * SETEMBRO 2006 PESADA S/SE 19H N/NE 19H * ANAT0 - FSE - C13
RELATORIO COMPLETO DO SISTEMA * AREA 13 * *              CEB                *
```

```
X----------------- D A D O S  -  B A R R A ------------------------X------------ F L U X O S  -  C I R C U I T O S ------------X
 DA BARRA      TENSAO GERACAO INJ EQV  CARGA   ELO CC  SHUNT    MOTOR
 NUM. KV TIPO   MOD/     MW/     MW/     MW/    MW/   Mvar/     MW/
     NOME       ANG     Mvar    Mvar    Mvar    Mvar   EQUIV    Mvar  PARA BARRA                    FLUXOS
                                                FLUXO % SHUNT L         NUM.     NOME     NC     MW    Mvar  MVA/V_d   TAP  DEFAS TIE
X------------X-------X-------X-------X-------X-------X-------X-------X----X------------X--X-------X-------X-------X------X-----X---X

 2543    1  0   0.970     0.0     0.0     0.0     0.0     0.0     0.0
 SE 05   34.5  -108.9     0.0     0.0     0.0     0.0     0.0     0.0
                                                73.5%                  2541 SE 01   34.5  1    -8.5     1.0     8.8
                                            SUP 126.9%                 2542 SE 02   34.5  1   -14.3    -3.7    15.2
                                                 0.0%                  2576 SE 06   34.5  1     0.0     0.0     0.0
                                                45.8%                  3617 SE 05   13.8  1    11.0     1.3    11.4 1.000F
                                                48.9%                  3617 SE 05   13.8  2    11.8     1.4    12.2 1.000F
 2544    1  0   1.001     0.0     0.0     0.0     0.0     0.0     0.0
 E_GR01  34.5  -110.1     0.0     0.0     0.0     0.0     0.0     0.0
                                                 0.0%                   221 B.GERAL-34.5  1     0.0     0.0     0.0               01
                                                54.6%                  2546 SE GR   34.5  1    16.7     5.2    17.5
                                                54.6%                  2554 SE TG   34.5  1   -16.7    -5.2    17.5
 2545    1  0   0.960     0.0     0.0     0.0     0.0     0.0     0.0
 E_GR02  34.5  -108.1     0.0     0.0     0.0     0.0     0.0     0.0
                                                59.4%                   221 B.GERAL-34.5  1   -16.7    -7.3    19.0               01
                                                 0.0%                  2554 SE TG   34.5  1     0.0     0.0     0.0
                                                57.6%                  2562 SE-GR02-34.5  1    16.7     7.3    19.0
 2546    1  0   1.000     0.0     0.0     0.0     0.0     0.0     0.0
 SE GR   34.5  -110.1     0.0     0.0     0.0     0.0     0.0     0.0
                                                54.6%                  2544 E_GR01  34.5  1   -16.7    -5.2    17.5
                                                69.9%                  3605 SE GR   13.8  1    16.7     5.2    17.5 1.000F
 2554    1  0   1.028     0.0     0.0     0.0     0.0     0.0     0.0
 SE TG   34.5  -108.4     0.0     0.0     0.0     0.0     0.0     0.0
                                                91.4%                  2502 SE TG    138  1   -33.2   -17.7    36.6
                                                91.4%                  2502 SE TG    138  2   -33.2   -17.7    36.6
                                                54.6%                  2544 E_GR01  34.5  1    17.0     5.8    17.5
                                                 0.0%                  2545 E_GR02  34.5  1     0.0     0.0     0.0
                                                42.8%                  2555 SE GM   34.5  1    12.0     7.3    13.7
                                                42.8%                  2555 SE GM   34.5  2    12.0     7.3    13.7
                                                42.8%                  2555 SE GM   34.5  3    12.0     7.3    13.7
                                                23.3%                  2556 SE-BZ  13.8   1     6.7     3.8     7.5
                                                23.3%                  2556 SE-BZ  13.8   2     6.7     3.8     7.5
 2555    1  0   0.937     0.0     0.0     0.0     0.0     0.0     0.0
 SE GM   34.5  -112.1     0.0     0.0     0.0     0.0     0.0     0.0
                                                42.9%                  2554 SE TG   34.5  1   -11.4    -6.0    13.7
                                                42.9%                  2554 SE TG   34.5  2   -11.4    -6.0    13.7
                                                42.9%                  2554 SE TG   34.5  3   -11.4    -6.0    13.7
                                                82.8%                  3606 SE GM   13.8  1    17.1     9.1    20.7 0.957F
                                                82.0%                  3606 SE GM   13.8  2    17.0     9.0    20.5 0.957F
CEPEL - CENTRO DE PESQUISAS DE ENERGIA ELETRICA - PROGRAMA DE ANALISE DE REDES - V08MAR05A                                PAG. 229

ANUAL 06/07 * SETEMBRO 2006 PESADA S/SE 19H N/NE 19H * ANAT0 - FSE - C13
RELATORIO COMPLETO DO SISTEMA * AREA 13 * *              CEB                *

X----------------- D A D O S  -  B A R R A ------------------------X------------ F L U X O S  -  C I R C U I T O S ------------X
 DA BARRA      TENSAO GERACAO INJ EQV  CARGA   ELO CC  SHUNT    MOTOR
 NUM. KV TIPO   MOD/     MW/     MW/     MW/    MW/   Mvar/     MW/
     NOME       ANG     Mvar    Mvar    Mvar    Mvar   EQUIV    Mvar  PARA BARRA                    FLUXOS
                                                FLUXO % SHUNT L         NUM.     NOME     NC     MW    Mvar  MVA/V_d   TAP  DEFAS TIE
X------------X-------X-------X-------X-------X-------X-------X-------X----X------------X--X-------X-------X-------X------X-----X---X

 2556    1  0   0.994     0.0     0.0     0.0     0.0     0.0     0.0
```

```
 SE-BZ  13.8   -109.4     0.0     0.0     0.0     0.0     0.0     0.0
                                              23.4%                 2554 SE TG   34.5  1    -6.5    -3.6     7.5
                                              23.4%                 2554 SE TG   34.5  2    -6.5    -3.6     7.5
                                              74.8%                 2557 SE-BZ  13.8   1    13.0     7.2    15.0
 2557    1  0   0.861     0.0     0.0     0.0     0.0     0.0     0.0
 SE-BZ  13.8   -113.7     0.0     0.0     0.0     0.0     0.0     0.0
                                              74.8%                 2556 SE-BZ  13.8   1   -11.7    -5.4    15.0
                                               1.5%                 3607 SE BZ   13.8  1     0.1     0.0     0.1 0.913F
                                          SUP 148.9%                 3607 SE BZ   13.8  2     5.8     2.7     7.4 0.913F
                                          SUP 148.9%                 3607 SE BZ   13.8  3     5.8     2.7     7.4 0.913F
 2562    1  0   0.959     0.0     0.0     0.0     0.0     0.0     0.0
 SE-GR02-34.5  -108.2     0.0     0.0     0.0     0.0     0.0     0.0
                                              57.6%                 2545 E_GR02  34.5  1   -16.7    -7.3    19.0
                                              76.0%                 3662 SE-GR02-13.8  1    16.7     7.3    19.0 1.000F
 2563    1  0   0.984     0.0     0.0     0.0     0.0     0.0     0.0
 SE-0802-34.5  -107.1     0.0     0.0     0.0     0.0     0.0     0.0
                                              45.0%                  221 B.GERAL-34.5  1   -10.6    -0.7    10.8                01
                                               0.0%                 2572 SE BN   34.5  1     0.0     0.0     0.0
                                              43.2%                 3663 SE-0802-13.8  1    10.6     0.7    10.8 1.000F
 2572    1  0   1.030     0.0     0.0     0.0     0.0     0.0     0.0
 SE BN   34.5  -109.9     0.0     0.0     0.0     0.0     0.0     0.0
                                               0.0%                 2563 SE-0802-34.5  1     0.0     0.0     0.0
                                              30.1%                 2574 SE 03   34.5  1     9.9     0.6     9.6
                                              30.1%                 2574 SE 03   34.5  2     9.9     0.6     9.6
                                              30.1%                 2574 SE 03   34.5  3     9.9     0.7     9.6
                                              37.0%                 2575 SE 04   34.5  1    12.1     1.8    11.8
                                              37.0%                 2575 SE 04   34.5  2    12.1     1.8    11.8
                                              37.0%                 2575 SE 04   34.5  3    12.1     1.8    11.8
                                               0.0%                 2576 SE 06   34.5  1     0.0     0.0     0.0
                                               0.0%                 2580 SE 08   34.5  1     0.0     0.0     0.0
                                              53.5%                 2584 E_TO11  34.5  1    14.3     4.1    14.4
                                              43.1%                 2585 E_TO12  34.5  1    11.7     2.8    11.6
                                              37.5%                 2587 E_TO21  34.5  1    11.3     4.9    12.0
                                              53.7%                 2588 E_TO22  34.5  1    16.4     6.7    17.2
                                              51.6%                 2592 BNFIC01 34.5  1   -34.8    -7.5    34.6
                                              50.7%                 2593 BNFIC02 34.5  1   -34.2    -7.4    34.0
                                              75.0%                 2594 BNFIC03 34.5  1   -50.6   -11.0    50.2
CEPEL - CENTRO DE PESQUISAS DE ENERGIA ELETRICA - PROGRAMA DE ANALISE DE REDES - V08MAR05A                          PAG. 230

ANUAL 06/07 * SETEMBRO 2006 PESADA S/SE 19H N/NE 19H * ANAT0 - FSE - C13
RELATORIO COMPLETO DO SISTEMA * AREA 13 * *              CEB              *

X----------------- D A D O S  -  B A R R A -------------------------X------------ F L U X O S  -  C I R C U I T O S ------------X
 DA BARRA      TENSAO GERACAO INJ EQV  CARGA   ELO CC  SHUNT    MOTOR
 NUM. KV TIPO   MOD/     MW/     MW/     MW/     MW/   Mvar/     MW/
     NOME       ANG     Mvar    Mvar    Mvar    Mvar   EQUIV    Mvar  PARA BARRA                    FLUXOS
                                              FLUXO % SHUNT L         NUM.     NOME     NC     MW    Mvar  MVA/V_d   TAP  DEFAS TIE
X------------X-------X-------X-------X-------X-------X-------X-------X----X------------X--X-------X-------X-------X------X-----X---X

 2573    1  0   1.021     0.0     0.0     0.0     0.0     0.0     0.0
 SE BC   34.5  -110.5     0.0     0.0     0.0     0.0     0.0     0.0
                                              69.0%                 2514 SE BC    138  1   -27.5     6.1    27.6
                                              62.5%                 2576 SE 06   34.5  1    15.0    -2.8    15.0
                                              29.4%                 2576 SE 06   34.5  2     9.0    -3.5     9.4
                                              26.3%                 2591 UPA     34.5  1     3.5     0.2     3.4
 2574    1  0   1.017     0.0     0.0     0.0     0.0     0.0     0.0
 SE 03   34.5  -111.2     0.0     0.0     0.0     0.0     0.0     0.0
                                              30.1%                 2572 SE BN   34.5  1    -9.8    -0.5     9.6
                                              30.1%                 2572 SE BN   34.5  2    -9.8    -0.5     9.6
                                              30.1%                 2572 SE BN   34.5  3    -9.8    -0.5     9.6
```

```
                                                  57.1%                 2576 SE 06   34.5  1   -11.6     0.4    11.4
                                                  52.7%                 3615 SE 03   13.8  1    13.4     0.3    13.2 1.000F
                                                  55.5%                 3615 SE 03   13.8  2    14.1     0.4    13.9 1.000F
                                                  53.1%                 3615 SE 03   13.8  3    13.5     0.3    13.3 1.000F
 2575    1  0   1.019     0.0     0.0     0.0     0.0     0.0     0.0
 SE 04   34.5  -110.8     0.0     0.0     0.0     0.0     0.0     0.0
                                                  37.0%                 2572 SE BN   34.5  1   -12.0    -1.6    11.8
                                                  37.0%                 2572 SE BN   34.5  2   -12.0    -1.6    11.8
                                                  37.0%                 2572 SE BN   34.5  3   -12.0    -1.6    11.8
                                                   6.3%                 2576 SE 06   34.5  1    -0.8    -1.3     1.5
                                                  72.8%                 3616 SE 04   13.8  1    18.3     3.1    18.2 1.000F
                                                  73.2%                 3616 SE 04   13.8  2    18.4     3.1    18.3 1.000F
 2576    1  0   1.021     0.0     0.0     0.0     0.0     0.0     0.0
 SE 06   34.5  -110.7     0.0     0.0     0.0     0.0     0.0     0.0
                                                   0.0%                 2543 SE 05   34.5  1     0.0     0.0     0.0
                                                   0.0%                 2572 SE BN   34.5  1     0.0     0.0     0.0
                                                  62.3%                 2573 SE BC   34.5  1   -15.0     2.7    15.0
                                                  29.4%                 2573 SE BC   34.5  2    -8.9     3.5     9.4
                                                  57.1%                 2574 SE 03   34.5  1    11.6    -0.6    11.4
                                                   3.6%                 2575 SE 04   34.5  1     0.8     0.3     0.9
                                                  17.8%                 2591 UPA     34.5  1     2.3     0.6     2.3
                                                  30.1%                 3618 SE 06   13.8  2     6.3    -4.4     7.5 1.000F
                                                  13.8%                 3618 SE 06   13.8  3     2.9    -2.0     3.5 1.000F
 2577    1  0   0.980     0.0     0.0     0.0     0.0     0.0     0.0
 E_0701  34.5  -112.3     0.0     0.0     0.0     0.0     0.0     0.0
                                                   0.0%                 2579 SE 07   34.5  1     0.0     0.0     0.0
                                                  44.5%                 2587 E_TO21  34.5  1   -11.0    -4.3    12.0
                                                  37.6%                 2595 E_09-01 34.5  1    11.0     4.3    12.0
CEPEL - CENTRO DE PESQUISAS DE ENERGIA ELETRICA - PROGRAMA DE ANALISE DE REDES - V08MAR05A                                PAG. 231

ANUAL 06/07 * SETEMBRO 2006 PESADA S/SE 19H N/NE 19H * ANAT0 - FSE - C13
RELATORIO COMPLETO DO SISTEMA * AREA 13 * *              CEB                *

X----------------- D A D O S  -  B A R R A -------------------------X------------- F L U X O S  -  C I R C U I T O S -------------X
 DA BARRA      TENSAO GERACAO INJ EQV  CARGA   ELO CC  SHUNT    MOTOR
 NUM. KV TIPO   MOD/     MW/     MW/     MW/     MW/   Mvar/     MW/
     NOME       ANG     Mvar    Mvar    Mvar    Mvar   EQUIV    Mvar  PARA BARRA                    FLUXOS
                                                FLUXO % SHUNT L         NUM.     NOME     NC     MW    Mvar  MVA/V_d   TAP  DEFAS TIE
X------------X-------X-------X-------X-------X-------X-------X-------X----X------------X--X-------X-------X-------X------X-----X---X

 2578    1  0   0.960     0.0     0.0     0.0     0.0     0.0     0.0
 E_0702  34.5  -113.6     0.0     0.0     0.0     0.0     0.0     0.0
                                                  61.6%                 2579 SE 07   34.5  1    11.3     3.4    12.3
                                                  63.7%                 2588 E_TO22  34.5  1   -15.6    -5.3    17.2
                                                  15.3%                 2596 E_09-02 34.5  1     4.3     1.9     4.9
 2579    1  0   0.958     0.0     0.0     0.0     0.0     0.0     0.0
 SE 07   34.5  -113.6     0.0     0.0     0.0     0.0     0.0     0.0
                                                   0.0%                 2577 E_0701  34.5  1     0.0     0.0     0.0
                                                  61.9%                 2578 E_0702  34.5  1   -11.3    -3.6    12.4
                                                  47.6%                 3619 SE 07   13.8  1     5.6     1.8     6.2 0.957F
                                                  47.6%                 3619 SE 07   13.8  2     5.6     1.8     6.2 0.957F
 2580    1  0   0.979     0.0     0.0     0.0     0.0     0.0     0.0
 SE 08   34.5  -107.3     0.0     0.0     0.0     0.0     0.0     0.0
                                          SUP    102.9%                  221 B.GERAL-34.5  1   -23.0    -7.5    24.7                01
                                                   0.0%                 2572 SE BN   34.5  1     0.0     0.0     0.0
                                                  98.8%                 3620 SE 08   13.8  1    23.0     7.5    24.7 1.000F
 2581    1  0   0.945     0.0     0.0     0.0     0.0     0.0     0.0
 SE 09   34.5  -114.3     0.0     0.0     0.0     0.0     0.0     0.0
                                                  37.6%                 2595 E_09-01 34.5  1   -10.7    -3.8    12.0
                                                  15.4%                 2596 E_09-02 34.5  1    -4.3    -1.8     4.9
```

```
                                                                67.8%                   3621 SE 09   13.8  1    15.0     5.6    17.0 0.957F
 2582    1  0   0.968     0.0     0.0     0.0     0.0     0.0     0.0
 SE 10   34.5  -114.4     0.0     0.0     0.0     0.0     0.0     0.0
                                                                43.9%                   2591 UPA     34.5  1   -13.4    -2.1    14.0
                                                                22.3%                   2597 E_SS    34.5  1    -6.6    -2.2     7.1
                                                                41.5%                   3622 SE 10   13.8  1     9.8     2.1    10.4 0.957F
                                                                42.9%                   3622 SE 10   13.8  2    10.2     2.2    10.7 0.957F
 2583    1  0   0.965     0.0     0.0     0.0     0.0     0.0     0.0
 SE SB   34.5  -114.0     0.0     0.0     0.0     0.0     0.0     0.0
                                                                34.5%                   2584 E_TO11  34.5  1    -8.9    -1.1     9.3
                                                                43.2%                   2585 E_TO12  34.5  1   -11.1    -1.9    11.7
                                                                 0.0%                   2588 E_TO22  34.5  1     0.0     0.0     0.0
                                                                52.0%                   3628 SE SB   13.8  1     6.5     1.0     6.8 0.957F
                                                                56.8%                   3628 SE SB   13.8  2    13.5     2.1    14.2 0.957F
 2584    1  0   0.991     0.0     0.0     0.0     0.0     0.0     0.0
 E_TO11  34.5  -112.1     0.0     0.0     0.0     0.0     0.0     0.0
                                                                53.5%                   2572 SE BN   34.5  1   -13.9    -3.4    14.4
                                                                34.4%                   2583 SE SB   34.5  1     9.1     1.4     9.3
                                                                27.6%                   2586 SE TO   34.5  1     4.8     2.0     5.3
                                                                 0.0%                   2587 E_TO21  34.5  1     0.0     0.0     0.0
CEPEL - CENTRO DE PESQUISAS DE ENERGIA ELETRICA - PROGRAMA DE ANALISE DE REDES - V08MAR05A                                   PAG. 232

ANUAL 06/07 * SETEMBRO 2006 PESADA S/SE 19H N/NE 19H * ANAT0 - FSE - C13
RELATORIO COMPLETO DO SISTEMA * AREA 13 * *              CEB                 *

X----------------- D A D O S  -  B A R R A -------------------------X------------ F L U X O S  -  C I R C U I T O S ------------X
 DA BARRA      TENSAO GERACAO INJ EQV  CARGA   ELO CC  SHUNT    MOTOR
 NUM. KV TIPO   MOD/     MW/     MW/     MW/     MW/   Mvar/     MW/
     NOME       ANG     Mvar    Mvar    Mvar    Mvar   EQUIV    Mvar  PARA BARRA                    FLUXOS
                                                FLUXO % SHUNT L        NUM.     NOME     NC     MW    Mvar  MVA/V_d   TAP  DEFAS TIE
X------------X-------X-------X-------X-------X-------X-------X-------X----X------------X--X-------X-------X-------X------X-----X---X

 2585    1  0   1.000     0.0     0.0     0.0     0.0     0.0     0.0
 E_TO12  34.5  -111.7     0.0     0.0     0.0     0.0     0.0     0.0
                                                                43.2%                   2572 SE BN   34.5  1   -11.4    -2.4    11.7
                                                                43.2%                   2583 SE SB   34.5  1    11.4     2.4    11.7
                                                                 0.0%                   2586 SE TO   34.5  1     0.0     0.0     0.0
                                                                 0.0%                   2588 E_TO22  34.5  1     0.0     0.0     0.0
 2586    1  0   0.990     0.0     0.0     4.8     0.0     0.0     0.0
 SE TO   34.5  -112.2     0.0     0.0     2.0     0.0     0.0     0.0
                                                                27.6%                   2584 E_TO11  34.5  1    -4.8    -2.0     5.3
                                                                 0.0%                   2585 E_TO12  34.5  1     0.0     0.0     0.0
 2587    1  0   0.999     0.0     0.0     0.0     0.0     0.0     0.0
 E_TO21  34.5  -111.5     0.0     0.0     0.0     0.0     0.0     0.0
                                                                37.5%                   2572 SE BN   34.5  1   -11.1    -4.5    12.0
                                                                44.5%                   2577 E_0701  34.5  1    11.1     4.5    12.0
                                                                 0.0%                   2584 E_TO11  34.5  1     0.0     0.0     0.0
 2588    1  0   0.986     0.0     0.0     0.0     0.0     0.0     0.0
 E_TO22  34.5  -112.2     0.0     0.0     0.0     0.0     0.0     0.0
                                                                53.7%                   2572 SE BN   34.5  1   -15.9    -5.8    17.2
                                                                63.7%                   2578 E_0702  34.5  1    15.9     5.8    17.2
                                                                 0.0%                   2583 SE SB   34.5  1     0.0     0.0     0.0
                                                                 0.0%                   2585 E_TO12  34.5  1     0.0     0.0     0.0
 2591    1  0   1.010     0.0     0.0     0.0     0.0     0.0     0.0
 UPA     34.5  -111.1     0.0     0.0     0.0     0.0     0.0     0.0
                                                                27.5%                   2573 SE BC   34.5  1    -3.5    -1.0     3.6
                                                                21.2%                   2576 SE 06   34.5  1    -2.3    -1.6     2.8
                                                                43.8%                   2582 SE 10   34.5  1    13.9     2.9    14.0
                                                                 0.0%                   2595 E_09-01 34.5  1     0.0     0.0     0.0
                                                                 0.0%                   2596 E_09-02 34.5  1     0.0     0.0     0.0
```

```
                                                 53.0%                 2597 E_SS    34.5  1    16.9     3.1    17.0
                                                 75.3%                 3623 PARANOA--3MQ  1    -8.3    -1.1     8.3 1.045F
                                                 83.0%                 3623 PARANOA--3MQ  2    -8.3    -1.1     8.3 1.045F
                                                 84.0%                 3623 PARANOA--3MQ  3    -8.4    -1.1     8.4 1.045F
 2592    1  0   1.029     0.0     0.0     0.0     0.0     0.0     0.0
 BNFIC01 34.5  -110.2     0.0     0.0     0.0     0.0     0.0     0.0
                                                 70.4%                 2513 SE BN    138  1   -47.5   -10.1    47.2
                                                 51.6%                 2572 SE BN   34.5  1    34.8     7.3    34.6 1.000F
                                                 38.2%                 3624 SE BN   13.8  1    12.7     2.8    12.6
 2593    1  0   1.029     0.0     0.0     0.0     0.0     0.0     0.0
 BNFIC02 34.5  -110.2     0.0     0.0     0.0     0.0     0.0     0.0
                                                 69.6%                 2513 SE BN    138  1   -46.9   -10.0    46.6
                                                 50.7%                 2572 SE BN   34.5  1    34.2     7.2    34.0 1.000F
                                                 38.4%                 3624 SE BN   13.8  1    12.7     2.8    12.7
CEPEL - CENTRO DE PESQUISAS DE ENERGIA ELETRICA - PROGRAMA DE ANALISE DE REDES - V08MAR05A                                PAG. 233

ANUAL 06/07 * SETEMBRO 2006 PESADA S/SE 19H N/NE 19H * ANAT0 - FSE - C13
RELATORIO COMPLETO DO SISTEMA * AREA 13 * *                CEB                *

X----------------- D A D O S  -  B A R R A -------------------------X------------ F L U X O S  -  C I R C U I T O S ------------X
 DA BARRA      TENSAO GERACAO INJ EQV  CARGA   ELO CC  SHUNT    MOTOR
 NUM. KV TIPO   MOD/     MW/     MW/     MW/     MW/   Mvar/     MW/
     NOME       ANG     Mvar    Mvar    Mvar    Mvar   EQUIV    Mvar  PARA BARRA                    FLUXOS
                                                FLUXO % SHUNT L        NUM.     NOME     NC     MW    Mvar  MVA/V_d   TAP  DEFAS TIE
X------------X-------X-------X-------X-------X-------X-------X-------X----X------------X--X-------X-------X-------X------X-----X---X

 2594    1  0   1.029     0.0     0.0     0.0     0.0     0.0     0.0
 BNFIC03 34.5  -110.2     0.0     0.0     0.0     0.0     0.0     0.0
                                                 75.0%                 2513 SE BN    138  1   -50.6   -10.7    50.2
                                                 75.0%                 2572 SE BN   34.5  1    50.6    10.7    50.2 1.000F
                                                  0.0%                 3624 SE BN   13.8  1     0.0     0.0     0.0
 2595    1  0   0.946     0.0     0.0     0.0     0.0     0.0     0.0
 E_09-01 34.5  -114.3     0.0     0.0     0.0     0.0     0.0     0.0
                                                 37.6%                 2577 E_0701  34.5  1   -10.7    -3.8    12.0
                                                 37.6%                 2581 SE 09   34.5  1    10.7     3.8    12.0
                                                  0.0%                 2591 UPA     34.5  1     0.0     0.0     0.0
 2596    1  0   0.945     0.0     0.0     0.0     0.0     0.0     0.0
 E_09-02 34.5  -114.3     0.0     0.0     0.0     0.0     0.0     0.0
                                                 15.4%                 2578 E_0702  34.5  1    -4.3    -1.8     4.9
                                                 15.4%                 2581 SE 09   34.5  1     4.3     1.8     4.9
                                                  0.0%                 2591 UPA     34.5  1     0.0     0.0     0.0
 2597    1  0   0.976     0.0     0.0     0.0     0.0     0.0     0.0
 E_SS    34.5  -113.9     0.0     0.0     0.0     0.0     0.0     0.0
                                                 22.3%                 2582 SE 10   34.5  1     6.6     2.2     7.1
                                                 53.1%                 2591 UPA     34.5  1   -16.4    -2.2    17.0
                                                 31.4%                 2598 SE SS   34.5  1     9.8     0.0    10.1
 2598    1  0   0.965     0.0     0.0     0.0     0.0     0.0     0.0
 SE SS   34.5  -115.3     0.0     0.0     0.0     0.0     0.0     0.0
                                                 31.4%                 2597 E_SS    34.5  1    -9.7     0.2    10.1
                                                 40.2%                 3640 SE SS   13.8  1     9.7    -0.2    10.1 1.000F
 3601    1  0   0.978     0.0     0.0    49.7     0.0    17.2     0.0
 SE TG   13.8  -111.6     0.0     0.0    21.8     0.0     0.0     0.0
                                                 79.3%                 2502 SE TG    138  1   -24.7    -2.3    25.4 0.988*
                                                 80.2%                 2502 SE TG    138  2   -25.0    -2.3    25.7 0.988*
 3602    1  0   1.014     0.0     0.0    43.8     0.0    18.5     0.0
 SE CN   13.8  -111.5     0.0     0.0    19.3     0.0     0.0     0.0
                                                 67.4%                 2507 SE CN    138  1   -21.9    -0.4    21.6 1.019*
                                                 67.6%                 2507 SE CN    138  2   -21.9    -0.4    21.6 1.019*
 3603    1  0   0.999     0.0     0.0    46.9     0.0    21.6     0.0
 SE CS   13.8  -109.5     0.0     0.0    21.1     0.0     0.0     0.0
```

```
                                                  49.2%                 2508 SE CS    138  1   -15.7     0.2    15.8 0.985*
                                                  48.7%                 2508 SE CS    138  2   -15.6     0.2    15.6 0.985*
                                                  48.7%                 2508 SE CS    138  3   -15.6     0.2    15.6 0.985*
CEPEL - CENTRO DE PESQUISAS DE ENERGIA ELETRICA - PROGRAMA DE ANALISE DE REDES - V08MAR05A                                PAG. 234

ANUAL 06/07 * SETEMBRO 2006 PESADA S/SE 19H N/NE 19H * ANAT0 - FSE - C13
RELATORIO COMPLETO DO SISTEMA * AREA 13 * *              CEB                *

X----------------- D A D O S  -  B A R R A -------------------------X------------ F L U X O S  -  C I R C U I T O S ------------X
 DA BARRA      TENSAO GERACAO INJ EQV  CARGA   ELO CC  SHUNT    MOTOR
 NUM. KV TIPO   MOD/     MW/     MW/     MW/     MW/   Mvar/     MW/
     NOME       ANG     Mvar    Mvar    Mvar    Mvar   EQUIV    Mvar  PARA BARRA                    FLUXOS
                                                FLUXO % SHUNT L         NUM.     NOME     NC     MW    Mvar  MVA/V_d   TAP  DEFAS TIE
X------------X-------X-------X-------X-------X-------X-------X-------X----X------------X--X-------X-------X-------X------X-----X---X

 3604    1  0   1.013     0.0     0.0    27.7     0.0     3.7     0.0
 SE AC   13.8  -107.9     0.0     0.0     9.1     0.0     0.0     0.0
                                                  43.5%                 2501 SE AC    138  1   -13.9    -2.7    13.9 1.017*
                                                  43.5%                 2501 SE AC    138  2   -13.8    -2.7    13.9 1.017*
 3605    1  0   0.986     0.0     0.0    16.7     0.0     4.1     0.0
 SE GR   13.8  -113.1     0.0     0.0     8.3     0.0     0.0     0.0
                                                  69.9%                 2546 SE GR   34.5  1   -16.7    -4.2    17.5
 3606    1  0   0.951     0.0     0.0    34.1     0.0     0.0     0.0
 SE GM   13.8  -115.5     0.0     0.0    15.6     0.0     0.0     0.0
                                                  79.2%                 2555 SE GM   34.5  1   -17.1    -7.8    19.8
                                                  78.5%                 2555 SE GM   34.5  2   -17.0    -7.8    19.6
 3607    1  0   0.943     0.0     0.0    11.7     0.0     0.0     0.0
 SE BZ   13.8  -113.7     0.0     0.0     5.4     0.0     0.0     0.0
                                                   1.3%                 2557 SE-BZ  13.8   1    -0.1     0.0     0.1
                                                 SUP 136.0%             2557 SE-BZ  13.8   2    -5.8    -2.7     6.8
                                                 SUP 136.0%             2557 SE-BZ  13.8   3    -5.8    -2.7     6.8
 3608    1  0   1.008     0.0     0.0    27.6     0.0     4.9     0.0
 SE NB   13.8  -113.4     0.0     0.0    12.7     0.0     0.0     0.0
                                                  73.0%                 2533 SE NB     69  1    -9.2    -2.6     9.5 1.057*
                                                  73.0%                 2533 SE NB     69  2    -9.2    -2.6     9.5 1.057*
                                                  73.0%                 2533 SE NB     69  3    -9.2    -2.6     9.5 1.057*
 3613    1  0   0.975     0.0     0.0    42.7     0.0    17.1     0.0
 SE 01   13.8  -111.0     0.0     0.0    15.2     0.0     0.0     0.0
                                                  58.3%                 2541 SE 01   34.5  1   -14.2     0.6    14.6
                                                  61.6%                 2541 SE 01   34.5  2   -15.0     0.7    15.4
                                                  55.5%                 2541 SE 01   34.5  3   -13.5     0.6    13.9
 3614    1  0   0.990     0.0     0.0    21.9     0.0    19.4     0.0
 SE 02   13.8  -109.7     0.0     0.0     9.3     0.0     0.0     0.0
                                                  31.6%                 2542 SE 02   34.5  1    -7.1     3.3     7.9
                                                  31.8%                 2542 SE 02   34.5  2    -7.1     3.3     8.0
                                                  34.0%                 2542 SE 02   34.5  3    -7.6     3.5     8.5
 3615    1  0   1.017     0.0     0.0    41.0     0.0    17.4     0.0
 SE 03   13.8  -113.4     0.0     0.0    16.8     0.0     0.0     0.0
                                                  52.7%                 2574 SE 03   34.5  1   -13.4     0.2    13.2
                                                  55.5%                 2574 SE 03   34.5  2   -14.1     0.2    13.9
                                                  53.1%                 2574 SE 03   34.5  3   -13.5     0.2    13.3
 3616    1  0   1.012     0.0     0.0    36.7     0.0     9.8     0.0
 SE 04   13.8  -113.9     0.0     0.0    14.0     0.0     0.0     0.0
                                                  72.8%                 2575 SE 04   34.5  1   -18.3    -2.1    18.2
                                                  73.2%                 2575 SE 04   34.5  2   -18.4    -2.1    18.3
CEPEL - CENTRO DE PESQUISAS DE ENERGIA ELETRICA - PROGRAMA DE ANALISE DE REDES - V08MAR05A                                PAG. 235

ANUAL 06/07 * SETEMBRO 2006 PESADA S/SE 19H N/NE 19H * ANAT0 - FSE - C13
RELATORIO COMPLETO DO SISTEMA * AREA 13 * *              CEB                *
```

```
X----------------- D A D O S  -  B A R R A ------------------------X------------ F L U X O S  -  C I R C U I T O S ------------X
 DA BARRA      TENSAO GERACAO INJ EQV  CARGA   ELO CC  SHUNT    MOTOR
 NUM. KV TIPO   MOD/     MW/     MW/     MW/     MW/   Mvar/     MW/
     NOME       ANG     Mvar    Mvar    Mvar    Mvar   EQUIV    Mvar  PARA BARRA                    FLUXOS
                                                FLUXO % SHUNT L        NUM.     NOME     NC     MW    Mvar  MVA/V_d   TAP  DEFAS TIE
X------------X-------X-------X-------X-------X-------X-------X-------X----X------------X--X-------X-------X-------X------X-----X---X

 3617    1  0   0.967     0.0     0.0    22.8     0.0     6.2     0.0
 SE 05   13.8  -110.9     0.0     0.0     8.0     0.0     0.0     0.0
                                            45.8%                     2543 SE 05   34.5  1   -11.0    -0.9    11.4
                                            48.9%                     2543 SE 05   34.5  2   -11.8    -0.9    12.2
 3618    1  0   1.033     0.0     0.0     9.2     0.0    10.3     0.0
 SE 06   13.8  -111.7     0.0     0.0     3.6     0.0     0.0     0.0
                                            30.1%                     2576 SE 06   34.5  2    -6.3     4.6     7.5
                                            13.8%                     2576 SE 06   34.5  3    -2.9     2.1     3.5
 3619    1  0   0.990     0.0     0.0    11.3     0.0     2.4     0.0
 SE 07   13.8  -115.7     0.0     0.0     5.5     0.0     0.0     0.0
                                            45.6%                     2579 SE 07   34.5  1    -5.6    -1.6     5.9
                                            45.6%                     2579 SE 07   34.5  2    -5.6    -1.6     5.9
 3620    1  0   0.960     0.0     0.0    23.0     0.0     3.9     0.0
 SE 08   13.8  -111.3     0.0     0.0     9.6     0.0     0.0     0.0
                                            98.8%                     2580 SE 08   34.5  1   -23.0    -5.7    24.7
 3621    1  0   0.972     0.0     0.0    15.0     0.0     2.3     0.0
 SE 09   13.8  -117.0     0.0     0.0     7.1     0.0     0.0     0.0
                                            64.9%                     2581 SE 09   34.5  1   -15.0    -4.8    16.2
 3622    1  0   1.006     0.0     0.0    20.0     0.0     4.9     0.0
 SE 10   13.8  -116.1     0.0     0.0     8.5     0.0     0.0     0.0
                                            39.8%                     2582 SE 10   34.5  1    -9.8    -1.8     9.9
                                            41.1%                     2582 SE 10   34.5  2   -10.2    -1.9    10.3
 3623    1  1   0.980    25.0     0.0     0.0     0.0     0.0     0.0
 PARANOA--3MQ  -106.6     5.4     0.0     0.0     0.0     0.0     0.0
                                            78.6%                     2591 UPA     34.5  1     8.3     1.8     8.7
                                            86.7%                     2591 UPA     34.5  2     8.3     1.8     8.7
                                            87.8%                     2591 UPA     34.5  3     8.4     1.8     8.8
 3624    1  0   0.977     0.0     0.0    25.4     0.0     5.7     0.0
 SE BN   13.8  -111.1     0.0     0.0    10.8     0.0     0.0     0.0
                                            40.1%                     2592 BNFIC01 34.5  1   -12.7    -2.5    13.2 0.953*
                                            40.2%                     2593 BNFIC02 34.5  1   -12.7    -2.5    13.3 0.953*
                                             0.0%                     2594 BNFIC03 34.5  1     0.0     0.0     0.0 1.000F
 3625    1  0   0.970     0.0     0.0    34.5     0.0    20.3     0.0
 SE BC   13.8  -109.8     0.0     0.0    14.0     0.0     0.0     0.0
                                            38.2%                     2514 SE BC    138  1   -11.7     2.1    12.2 0.966*
                                            37.4%                     2514 SE BC    138  2   -11.4     2.1    12.0 0.966*
                                            37.4%                     2514 SE BC    138  3   -11.4     2.1    12.0 0.966*
CEPEL - CENTRO DE PESQUISAS DE ENERGIA ELETRICA - PROGRAMA DE ANALISE DE REDES - V08MAR05A                                PAG. 236

ANUAL 06/07 * SETEMBRO 2006 PESADA S/SE 19H N/NE 19H * ANAT0 - FSE - C13
RELATORIO COMPLETO DO SISTEMA * AREA 13 * *              CEB                *

X----------------- D A D O S  -  B A R R A ------------------------X------------ F L U X O S  -  C I R C U I T O S ------------X
 DA BARRA      TENSAO GERACAO INJ EQV  CARGA   ELO CC  SHUNT    MOTOR
 NUM. KV TIPO   MOD/     MW/     MW/     MW/     MW/   Mvar/     MW/
     NOME       ANG     Mvar    Mvar    Mvar    Mvar   EQUIV    Mvar  PARA BARRA                    FLUXOS
                                                FLUXO % SHUNT L        NUM.     NOME     NC     MW    Mvar  MVA/V_d   TAP  DEFAS TIE
X------------X-------X-------X-------X-------X-------X-------X-------X----X------------X--X-------X-------X-------X------X-----X---X

 3627    1  0   0.978     0.0     0.0    13.4     0.0     5.7     0.0
 SE CT   13.8  -110.1     0.0     0.0     6.0     0.0     0.0     0.0
                                            42.8%                     2519 SE CT    138  1   -13.4    -0.3    13.7 0.991*
 3628    1  0   1.003     0.0     0.0    20.0     0.0     7.2     0.0
```

```
 SE SB   13.8  -116.4     0.0     0.0     9.5     0.0     0.0     0.0
                                              49.8%                 2583 SE SB   34.5  1    -6.5    -0.7     6.5
                                              54.3%                 2583 SE SB   34.5  2   -13.5    -1.5    13.6
 3629    1  0   0.986     0.0     0.0    29.3     0.0     7.0     0.0
 SE PL   13.8  -120.1     0.0     0.0    14.4     0.0     0.0     0.0
                                              78.6%                 2536 SE PL     69  1    -9.8    -2.5    10.2 1.061*
                                              78.6%                 2536 SE PL     69  2    -9.8    -2.5    10.2 1.061*
                                              78.6%                 2536 SE PL     69  3    -9.8    -2.5    10.2 1.061*
 3630    1  0   1.022     0.0     0.0     5.3     0.0     2.5     0.0
 SE PD   13.8  -117.6     0.0     0.0     3.7     0.0     0.0     0.0
                                              44.3%                 2537 SE PD     69  1    -2.6    -0.6     2.7 1.079*
                                              44.3%                 2537 SE PD     69  2    -2.6    -0.6     2.7 1.079*
 3632   14  0   0.990     0.0     0.0    26.0     0.0     5.9     0.0
 SE-ES   13.8  -106.1     0.0     0.0    11.4     0.0     0.0     0.0
                                              42.0%                 2521 SE-ES    138  1   -13.0    -2.8    13.4 0.998*
                                              42.0%                 2521 SE-ES    138  2   -13.0    -2.8    13.4 0.998*
 3638    1  0   1.016     0.0     0.0    25.8     0.0     6.2     0.0
 SE MJ   13.8  -104.5     0.0     0.0    11.4     0.0     0.0     0.0
                                              40.5%                 2523 SE MJ    138  1   -12.9    -2.6    13.0 1.015*
                                              40.5%                 2523 SE MJ    138  2   -12.9    -2.6    13.0 1.015*
 3639    1  0   0.981     0.0     0.0    18.4     0.0     4.6     0.0
 SE SM   13.8  -105.7     0.0     0.0     7.6     0.0     0.0     0.0
                                              59.4%                 2524 SE SM    138  1   -18.4    -3.0    19.0 0.991*
 3640    1  0   0.966     0.0     0.0     9.7     0.0     4.5     0.0
 SE SS   13.8  -117.1     0.0     0.0     4.0     0.0     0.0     0.0
                                              40.2%                 2598 SE SS   34.5  1    -9.7     0.5    10.1
 3641   14  1   1.000   103.0     0.0     0.0     0.0     0.0     0.0
 CORUMBA4-1GR   -90.9     6.8     0.0     0.0     0.0     0.0     0.0
                                              77.0%                 2526 CORUMBA4-138  1    51.5     3.4    51.6
                                              77.0%                 2526 CORUMBA4-138  2    51.5     3.4    51.6
 3662    1  0   0.937     0.0     0.0    16.7     0.0     2.1     0.0
 SE-GR02-13.8  -111.4     0.0     0.0     8.3     0.0     0.0     0.0
                                              76.0%                 2562 SE-GR02-34.5  1   -16.7    -6.2    19.0
CEPEL - CENTRO DE PESQUISAS DE ENERGIA ELETRICA - PROGRAMA DE ANALISE DE REDES - V08MAR05A                                PAG. 237

ANUAL 06/07 * SETEMBRO 2006 PESADA S/SE 19H N/NE 19H * ANAT0 - FSE - C13
RELATORIO COMPLETO DO SISTEMA * AREA 13 * *              CEB              *

X----------------- D A D O S  -  B A R R A -------------------------X------------ F L U X O S  -  C I R C U I T O S ------------X
 DA BARRA      TENSAO GERACAO INJ EQV  CARGA   ELO CC  SHUNT    MOTOR
 NUM. KV TIPO   MOD/     MW/     MW/     MW/     MW/   Mvar/     MW/
     NOME       ANG     Mvar    Mvar    Mvar    Mvar   EQUIV    Mvar  PARA BARRA                    FLUXOS
                                                FLUXO % SHUNT L         NUM.     NOME     NC     MW    Mvar  MVA/V_d   TAP  DEFAS TIE
X------------X-------X-------X-------X-------X-------X-------X-------X----X------------X--X-------X-------X-------X------X-----X---X

 3663    1  0   0.982     0.0     0.0    10.6     0.0     4.1     0.0
 SE-0802-13.8  -108.9     0.0     0.0     4.4     0.0     0.0     0.0
                                              43.2%                 2563 SE-0802-34.5  1   -10.6    -0.3    10.8


TOTAIS DA AREA 13


X--------X--------X--------X--------X--------X--------X--------X--------X
  GERACAO  INJ EQV   CARGA   ELO CC    SHUNT   EXPORT   IMPORT   PERDAS
    MW/      MW/      MW/      MW/     Mvar/    MW/      MW/      MW/
   Mvar     Mvar     Mvar     Mvar     EQUIV   Mvar     Mvar     Mvar
X--------X--------X--------X--------X--------X--------X--------X--------X
```

```
    128.0      0.0    764.1      0.0    239.3    102.1    758.9     20.7
     12.2      0.0    324.9      0.0      0.0     29.9    209.1    105.8
CEPEL - CENTRO DE PESQUISAS DE ENERGIA ELETRICA - PROGRAMA DE ANALISE DE REDES - V08MAR05A                                PAG. 238

ANUAL 06/07 * SETEMBRO 2006 PESADA S/SE 19H N/NE 19H * ANAT0 - FSE - C13
RELATORIO COMPLETO DO SISTEMA * AREA 14 * *        C G E E T - TIETE         *

X----------------- D A D O S  -  B A R R A ------------------------X------------ F L U X O S  -  C I R C U I T O S ------------X
 DA BARRA      TENSAO GERACAO INJ EQV  CARGA   ELO CC  SHUNT    MOTOR
 NUM. KV TIPO   MOD/     MW/     MW/     MW/     MW/   Mvar/     MW/
     NOME       ANG     Mvar    Mvar    Mvar    Mvar   EQUIV    Mvar  PARA BARRA                    FLUXOS
                                                FLUXO % SHUNT L         NUM.     NOME     NC     MW    Mvar  MVA/V_d   TAP  DEFAS TIE
X------------X-------X-------X-------X-------X-------X-------X-------X----X------------X--X-------X-------X-------X------X-----X---X

  500    1  1   1.023  1117.0     0.0     0.0     0.0     0.0     0.0
 A.VERMEL-5GR   -64.4  -212.4     0.0     0.0     0.0     0.0     0.0
                                             74.1%                     536 AVERMELH-440  1  1117.0  -212.4  1111.5              05
  515    1  1   1.050   110.0     0.0     0.0     0.0     0.0     0.0
 BARIRI---3GR   -83.5    53.2     0.0     0.0     0.0     0.0     0.0
                                             73.2%                     634 BARIRI-A-138  1   110.0    53.2   116.4              06
  516    1  1   1.014   112.0     0.0     0.0     0.0     0.0     0.0
 B.BONITA-4GR   -85.5     4.1     0.0     0.0     0.0     0.0     0.0
                                             71.3%                     635 BBONITA--138  1   112.0     4.1   110.5              06
  517    1  1   1.025   106.0     0.0     0.0     0.0     0.0     0.0
 IBITINGA-3GR   -73.2    15.6     0.0     0.0     0.0     0.0     0.0
                                             71.6%                     645 IBITINGA-138  1   106.0    15.6   104.5              06
  518    1  1   1.000   265.0     0.0     0.0     0.0     0.0     0.0
 N.AVANHA-3GR   -66.0    67.3     0.0     0.0     0.0     0.0     0.0
                                             78.8%                     652 NAVANHAN-138  1   265.0    67.3   273.4              06
  519    1  1   1.025   211.0     0.0     0.0     0.0     0.0     0.0
 PROMISSA-3GR   -71.7    97.5     0.0     0.0     0.0     0.0     0.0
                                             75.6%                     661 PROMISSAO138  1   211.0    97.5   226.8              06
  521    1  1   1.025    64.0     0.0     0.0     0.0     0.0     0.0
 CACONDE--2GR   -88.2    14.4     0.0     0.0     0.0     0.0     0.0
                                             80.0%                     683 CACONDE--138  1    64.0    14.4    64.0              06
  522    1  1   1.035    87.0     0.0     0.0     0.0     0.0     0.0
 E.CUNHA--4GR   -90.2    19.5     0.0     0.0     0.0     0.0     0.0
                                             79.8%                     687 EUCUNHA--138  1    87.0    19.5    86.1              06
  523    1  1   1.040    26.0     0.0     0.0     0.0     0.0     0.0
 LIMOEIRO-2GR   -91.1    10.7     0.0     0.0     0.0     0.0     0.0
                                             67.6%                     693 LIMOEIRO-138  1    26.0    10.7    27.0              06
CEPEL - CENTRO DE PESQUISAS DE ENERGIA ELETRICA - PROGRAMA DE ANALISE DE REDES - V08MAR05A                                PAG. 239

ANUAL 06/07 * SETEMBRO 2006 PESADA S/SE 19H N/NE 19H * ANAT0 - FSE - C13


TOTAIS DA AREA 14


X--------X--------X--------X--------X--------X--------X--------X--------X
  GERACAO  INJ EQV   CARGA   ELO CC    SHUNT   EXPORT   IMPORT   PERDAS
    MW/      MW/      MW/      MW/     Mvar/     MW/      MW/      MW/
   Mvar     Mvar     Mvar     Mvar     EQUIV    Mvar     Mvar     Mvar
X--------X--------X--------X--------X--------X--------X--------X--------X

   2098.0      0.0      0.0      0.0      0.0   2098.0      0.0      0.0
     69.8      0.0      0.0      0.0      0.0    282.3    212.4      0.0
CEPEL - CENTRO DE PESQUISAS DE ENERGIA ELETRICA - PROGRAMA DE ANALISE DE REDES - V08MAR05A                                PAG. 240
```

ANUAL 06/07 * SETEMBRO 2006 PESADA S/SE 19H N/NE 19H * ANAT0 - FSE - C13
RELATORIO COMPLETO DO SISTEMA * AREA 15 * * DUKE ENERGY-GERACAO PARANAPANEMA *

| DADOS - BARRA | | | | | | | | | FLUXOS - CIRCUITOS | | | | | | | |
|---|---|---|---|---|---|---|---|---|---|---|---|---|---|---|---|---|
| DA BARRA NUM. NOME | KV | TIPO | TENSAO MOD/ ANG | GERACAO MW/ Mvar | INJ EQV MW/ Mvar | CARGA MW/ Mvar | ELO CC MW/ Mvar FLUXO % | SHUNT Mvar/ EQUIV SHUNT L | MOTOR MW/ Mvar | PARA BARRA NUM. | NOME | NC | MW | FLUXOS Mvar | MVA/V_d | TAP | DEFAS | TIE |
| 506 JURUMIRI-2GR | 1 | 1 | 1.000 -76.0 | 78.0 15.4 | 0.0 0.0 | 0.1 0.1 | 0.0 0.0 69.6% | 0.0 0.0 | 0.0 0.0 | 618 | JURUMIRI-230 | 1 | 77.9 | 15.3 | 79.4 | | | 05 |
| 507 CAPIVARA-4GR | 1 | 1 | 1.050 -52.5 | 512.0 79.1 | 0.0 0.0 | 0.3 0.1 | 0.0 0.0 69.3% | 0.0 0.0 | 0.0 0.0 | 549 | CAPIVARA-440 | 1 | 511.7 | 79.0 | 493.1 | | | 05 |
| 508 CANOAS-1-3GR | 1 | 1 | 0.990 -58.8 | 67.0 -11.2 | 0.0 0.0 | 0.5 0.2 | 0.0 0.0 81.1% | 0.0 0.0 | 0.0 0.0 | 555 | CANOAS-1--88 | 1 | 66.5 | -11.4 | 68.2 | | | 05 |
| 509 CANOAS-2-3GR | 1 | 1 | 0.994 -61.9 | 58.0 -9.1 | 0.0 0.0 | 0.4 0.2 | 0.0 0.0 69.9% | 0.0 0.0 | 0.0 0.0 | 557 | CANOAS-2--88 | 1 | 57.6 | -9.3 | 58.7 | | | 05 |
| 511 ROSANA---4GR | 1 | 1 | 1.030 -53.9 | 298.0 39.9 | 0.0 0.0 | 0.5 0.2 | 0.0 0.0 78.3% | 0.0 0.0 | 0.0 0.0 | 546 | ROSANA---138 | 1 | 297.5 | 39.7 | 291.4 | | | 05 |
| 512 S.GRANDE-4GR | 1 | 1 | 1.000 -67.0 | 59.0 4.6 | 0.0 0.0 | 0.3 0.1 | 0.0 0.0 63.3% | 0.0 0.0 | 0.0 0.0 | 613 | SALTOGRD-088 | 1 | 58.7 | 4.5 | 58.9 | | | 05 |
| 513 TAQUARUC-5GR | 1 | 1 | 1.020 -49.7 | 444.0 -83.0 | 0.0 0.0 | 0.9 0.4 | 0.0 0.0 78.9% | 0.0 0.0 | 0.0 0.0 | 547 | TAQUARUC-440 | 1 | 443.1 | -83.4 | 442.0 | | | 05 |
| 514 CHAVANTE-4GR | 1 | 1 | 1.000 -70.9 | 331.0 70.9 | 0.0 0.0 | 0.0 0.0 | 0.0 0.0 73.6% | 0.0 0.0 | 0.0 0.0 | 615 | CHAVANTE-230 | 1 | 331.0 | 70.9 | 338.5 | | | 05 |

TOTAIS DA AREA 15

| GERACAO MW/ Mvar | INJ EQV MW/ Mvar | CARGA MW/ Mvar | ELO CC MW/ Mvar | SHUNT Mvar/ EQUIV | EXPORT MW/ Mvar | IMPORT MW/ Mvar | PERDAS MW/ Mvar |
|---|---|---|---|---|---|---|---|
| 1847.0 | 0.0 | 3.0 | 0.0 | 0.0 | 1844.0 | 0.0 | 0.0 |
| 106.6 | 0.0 | 1.3 | 0.0 | 0.0 | 209.4 | 104.1 | 0.0 |



ANUAL 06/07 * SETEMBRO 2006 PESADA S/SE 19H N/NE 19H * ANAT0 - FSE - C13
RELATORIO COMPLETO DO SISTEMA * AREA 16 * * CELTINS *

| DADOS - BARRA | | | | | | | | | FLUXOS - CIRCUITOS | | | | | | | |
|---|---|---|---|---|---|---|---|---|---|---|---|---|---|---|---|---|
| DA BARRA NUM. NOME | KV | TIPO | TENSAO MOD/ ANG | GERACAO MW/ Mvar | INJ EQV MW/ Mvar | CARGA MW/ Mvar | ELO CC MW/ Mvar FLUXO % | SHUNT Mvar/ EQUIV SHUNT L | MOTOR MW/ Mvar | PARA BARRA NUM. | NOME | NC | MW | FLUXOS Mvar | MVA/V_d | TAP | DEFAS | TIE |

```
 1110    1  0   1.020     0.0     0.0     7.2     0.0     0.0     0.0
 CELTINS-FCE   -105.3     0.0     0.0    -6.8     0.0     0.0     0.0
                                                0.1%                 793 PORANGATU138  1    -7.2     6.8     9.7              12


TOTAIS DA AREA 16


X--------X--------X--------X--------X--------X--------X--------X--------X
  GERACAO  INJ EQV   CARGA   ELO CC    SHUNT   EXPORT   IMPORT   PERDAS
    MW/      MW/      MW/     MW/     Mvar/     MW/      MW/      MW/
   Mvar     Mvar     Mvar     Mvar     EQUIV    Mvar     Mvar     Mvar
X--------X--------X--------X--------X--------X--------X--------X--------X

      0.0      0.0      7.2      0.0      0.0      0.0      7.2      0.0
      0.0      0.0     -6.8      0.0      0.0      6.8      0.0      0.0
CEPEL - CENTRO DE PESQUISAS DE ENERGIA ELETRICA - PROGRAMA DE ANALISE DE REDES - V08MAR05A                                PAG. 242

ANUAL 06/07 * SETEMBRO 2006 PESADA S/SE 19H N/NE 19H * ANAT0 - FSE - C13
RELATORIO COMPLETO DO SISTEMA * AREA 17 * *       ITAIPU (50 E 60 HZ)        *

X----------------- D A D O S  -  B A R R A ------------------------X------------ F L U X O S  -  C I R C U I T O S ------------X
 DA BARRA      TENSAO GERACAO INJ EQV  CARGA   ELO CC  SHUNT    MOTOR
 NUM. KV TIPO   MOD/     MW/     MW/     MW/     MW/   Mvar/     MW/
     NOME       ANG     Mvar    Mvar    Mvar    Mvar   EQUIV    Mvar  PARA BARRA                    FLUXOS
                                                FLUXO % SHUNT L         NUM.     NOME     NC     MW    Mvar  MVA/V_d   TAP  DEFAS TIE
X------------X-------X-------X-------X-------X-------X-------X-------X----X------------X--X-------X-------X-------X------X-----X---X

 1100    1  2   1.040  6079.3     0.0    14.0     0.0     0.0     0.0
 ITAIPU50-9GR     0.0  2330.3     0.0     0.0     0.0     0.0     0.0
                                                78.1%                 1101 ITAIPU50-500  1  6065.3  2330.3  6247.6
 1101    1  0   1.022     0.0     0.0     0.0     0.0     0.0     0.0
 ITAIPU50-500    -7.6     0.0     0.0     0.0     0.0     0.0     0.0
                                                76.6%                   85 FOZ-500-50HZ  1  1376.7   292.2  1377.2              01
                                                78.7%                   85 FOZ-500-50HZ  2  1415.2   300.8  1415.7              01
                                                76.3%                 1100 ITAIPU50-9GR  1 -6065.3 -1444.7  6101.2 1.024F
                                                16.6%                 1103 MARGEMDIR500  1  1645.3   428.3  1663.6
                                                16.5%                 1103 MARGEMDIR500  2  1628.2   423.4  1646.2
 1103    1  0   1.021     0.0     0.0   700.0     0.0     0.0     0.0
 MARGEMDIR500    -7.8     0.0     0.0   339.0     0.0     0.0     0.0
                                                70.7%                   85 FOZ-500-50HZ  1  1273.6   249.7  1271.4              01
                                                72.1%                   85 FOZ-500-50HZ  2  1299.1   255.0  1297.0              01
                                                16.6%                 1101 ITAIPU50-500  1 -1644.9  -424.3  1664.2
                                                16.5%                 1101 ITAIPU50-500  2 -1627.8  -419.5  1646.8
 1106  500  0   1.050     0.0     0.0     0.0     0.0     0.0     0.0
 ITAIPU60-500   -39.7     0.0     0.0     0.0     0.0     0.0     0.0
                                                80.6%                   61 FOZ-500-60HZ  1  1462.9    97.1  1396.3              01
                                                81.8%                   61 FOZ-500-60HZ  2  1484.7    98.8  1417.2              01
                                                83.3%                   61 FOZ-500-60HZ  3  1511.6   100.6  1442.8              01
                                                84.5%                   61 FOZ-500-60HZ  4  1532.7   102.2  1463.0              01
                                                71.5%                 1107 ITAIPU60-9GR  1 -5991.9  -398.7  5719.2 1.024F
 1107    1  1   1.044  6000.0     0.0     8.0     0.0     0.0     0.0
 ITAIPU60-9GR   -32.1  1208.4     0.0     0.0     0.0     0.0     0.0
                                                73.2%                 1106 ITAIPU60-500  1  5991.9  1208.4  5856.5


TOTAIS DA AREA 17
```

```
X--------X--------X--------X--------X--------X--------X--------X--------X
  GERACAO  INJ EQV   CARGA   ELO CC    SHUNT   EXPORT   IMPORT   PERDAS
    MW/      MW/      MW/      MW/     Mvar/     MW/      MW/      MW/
   Mvar     Mvar     Mvar     Mvar     EQUIV    Mvar     Mvar     Mvar
X--------X--------X--------X--------X--------X--------X--------X--------X

  12079.3      0.0    722.0      0.0      0.0  11347.8      0.0      9.4
   3538.7      0.0    339.0      0.0      0.0   1425.9      0.0   1773.8
CEPEL - CENTRO DE PESQUISAS DE ENERGIA ELETRICA - PROGRAMA DE ANALISE DE REDES - V08MAR05A                                PAG. 243

ANUAL 06/07 * SETEMBRO 2006 PESADA S/SE 19H N/NE 19H * ANAT0 - FSE - C13
RELATORIO COMPLETO DO SISTEMA * AREA 18 * *      CATAGUAZES LEOPOLDINA       *

X----------------- D A D O S  -  B A R R A -------------------------X------------ F L U X O S  -  C I R C U I T O S ------------X
 DA BARRA      TENSAO GERACAO INJ EQV  CARGA   ELO CC  SHUNT    MOTOR
 NUM. KV TIPO   MOD/     MW/     MW/     MW/     MW/   Mvar/    MW/
     NOME       ANG     Mvar    Mvar    Mvar    Mvar   EQUIV    Mvar  PARA BARRA                    FLUXOS
                                                FLUXO % SHUNT L         NUM.     NOME     NC     MW    Mvar  MVA/V_d   TAP  DEFAS TIE
X------------X-------X-------X-------X-------X-------X-------X-------X----X------------X--X-------X-------X-------X------X-----X---X

 3300  138  0   1.018     0.0     0.0     0.0     0.0     0.0     0.0
 APARAIBA-138  -117.8     0.0     0.0     0.0     0.0     0.0     0.0
                                                 9.2%                  258 I.POMBOS-138  1     0.1    -6.2     6.1              09
                                                 9.2%                  258 I.POMBOS-138  2     0.1    -6.2     6.1              09
                                                 8.1%                 3301 LEOPOLD--138  1    -5.5     5.6     7.7
                                                 8.9%                 3305 CATAG(2)-138  1    -3.1     8.0     8.4
                                                56.5%                 3324 APARAIBA--69  1     8.5    -1.2     8.5 1.000F
 3301  138  0   1.013     0.0     0.0     0.0     0.0     0.0     0.0
 LEOPOLD--138  -117.3     0.0     0.0     0.0     0.0     0.0     0.0
                                                10.2%                 3300 APARAIBA-138  1     5.6    -8.1     9.7
                                                54.9%                 3302 LEOPOLD---69  1    20.2     3.7    20.3 0.975F
                                                27.2%                 3303 N.U.MAUR-138  1   -25.8     4.4    25.8
 3302   69  0   1.032     0.0     0.0    20.2     0.0     7.7     0.0
 LEOPOLD---69  -119.2     0.0     0.0    10.7     0.0     0.0     0.0
                                                53.5%                 3301 LEOPOLD--138  1   -20.2    -3.0    19.8
 3303  138  0   1.017     0.0     0.0     0.0     0.0     0.0     0.0
 N.U.MAUR-138  -116.5     0.0     0.0     0.0     0.0     0.0     0.0
                                                27.4%                 3301 LEOPOLD--138  1    26.0    -5.4    26.1
                                                21.4%                 3304 N.U.MAUR--69  1    -7.7    -2.5     7.9 0.975F
                                                27.4%                 3305 CATAG(2)-138  1    25.7     6.2    26.0
                                                41.2%                 3333 U.TRIUNF-138  1   -44.0     1.6    43.3
 3304   69 -1   1.048    29.0     0.0     3.2     0.0     0.0     0.0
 N.U.MAUR--69  -115.8     6.9     0.0     1.5     0.0     0.0     0.0
                                                20.9%                 3303 N.U.MAUR-138  1     7.7     2.6     7.7
                                                57.1%                 3331 SJNEPUMUC-69  1    11.1     2.4    10.9
                                                29.1%                 3334 ASTOLFO.D-69  1     7.0     0.4     6.7
 3305  138  0   1.006     0.0     0.0     0.0     0.0     0.0     0.0
 CATAG(2)-138  -117.2     0.0     0.0     0.0     0.0     0.0     0.0
                                                12.3%                 3300 APARAIBA-138  1     3.2   -11.3    11.7
                                                27.7%                 3303 N.U.MAUR-138  1   -25.5    -7.2    26.3
                                                89.3%                 3306 CATAG(2)--69  1    31.2    11.5    33.0 0.950F
                                                10.7%                 3337 U.BRAUNA-138  1    -8.9     6.9    11.2
 3306   69 -1   1.041     0.9     0.0    22.3     0.0     6.2     0.0
 CATAG(2)--69  -119.6     0.7     0.0     4.7     0.0     0.0     0.0
                                                84.8%                 3305 CATAG(2)-138  1   -31.1   -10.0    31.4
                                                68.3%                 3318 CATAG(1)--69  1    12.7     4.6    13.0
                                                55.6%                 3325 LARANJ(DR)69  1    -3.0     7.5     7.8
 3307  138  0   0.999     0.0     0.0     0.0     0.0     0.0     0.0
 MURIAE(2)138  -116.3     0.0     0.0     0.0     0.0     0.0     0.0
```

```
                                                 36.4%                 3308 MURIAE(2)-69  1    -9.0    10.0    13.5 0.950F
                                                 12.8%                 3337 U.BRAUNA-138  1     9.0   -10.0    13.5
CEPEL - CENTRO DE PESQUISAS DE ENERGIA ELETRICA - PROGRAMA DE ANALISE DE REDES - V08MAR05A                                PAG. 244

ANUAL 06/07 * SETEMBRO 2006 PESADA S/SE 19H N/NE 19H * ANAT0 - FSE - C13
RELATORIO COMPLETO DO SISTEMA * AREA 18 * *      CATAGUAZES LEOPOLDINA       *

X----------------- D A D O S  -  B A R R A -------------------------X------------ F L U X O S  -  C I R C U I T O S ------------X
 DA BARRA      TENSAO GERACAO INJ EQV  CARGA   ELO CC  SHUNT    MOTOR
 NUM. KV TIPO   MOD/     MW/     MW/     MW/     MW/   Mvar/     MW/
     NOME       ANG     Mvar    Mvar    Mvar    Mvar   EQUIV    Mvar  PARA BARRA                    FLUXOS
                                                FLUXO % SHUNT L        NUM.     NOME     NC     MW     Mvar  MVA/V_d   TAP  DEFAS TIE
X------------X-------X-------X-------X-------X-------X-------X-------X----X------------X--X-------X-------X-------X------X-----X---X

 3308   69  0   1.044     0.0     0.0    11.2     0.0     5.9     0.0
 MURIAE(2)-69  -115.1     0.0     0.0     4.2     0.0     0.0     0.0
                                                 34.6%                 3307 MURIAE(2)138  1     9.1    -9.8    12.8
                                                 65.8%                 3309 MURIAE(1)-69  1    15.7    -1.4    15.1
                                                 61.1%                 3327 U.ENCOBER-69  1   -36.0    12.8    36.7
 3309   69 -1   1.028     5.4     0.0    14.8     0.0     3.8     0.0
 MURIAE(1)-69  -116.2    -1.5     0.0     7.3     0.0     0.0     0.0
                                                 65.7%                 3308 MURIAE(2)-69  1   -15.5     1.5    15.1
                                                 61.8%                 3325 LARANJ(DR)69  1     6.1    -6.5     8.7
 3310  138  0   1.009     0.0     0.0     0.0     0.0     0.0     0.0
 UBA(2)---138  -115.1     0.0     0.0     0.0     0.0     0.0     0.0
                                                 75.0%                 3311 UBA(2)----69  1    26.8     8.2    27.8 0.975F
                                                 33.6%                 3313 VRBRAN(2)138  1   -10.9    16.0    19.2
                                                  3.3%                 3317 TOCANT---138  1     0.1    -3.2     3.2
                                                 24.9%                 3333 U.TRIUNF-138  1   -16.0   -21.0    26.2
 3311   69  0   1.021     0.0     0.0    15.4     0.0     0.0     0.0
 UBA(2)----69  -117.3     0.0     0.0     3.4     0.0     0.0     0.0
                                                 73.1%                 3310 UBA(2)---138  1   -26.7    -7.0    27.1
                                                 41.6%                 3312 UBA(1)----69  1    11.3     3.6    11.6
 3312   69  0   1.019     0.0     0.0     7.0     0.0     0.0     0.0
 UBA(1)----69  -117.5     0.0     0.0     1.9     0.0     0.0     0.0
                                                 41.7%                 3311 UBA(2)----69  1   -11.3    -3.7    11.7
                                                 14.3%                 3336 DIVIN(DR)69   1     4.3     1.8     4.6
 3313  138  0   1.003     0.0     0.0     0.0     0.0     0.0     0.0
 VRBRAN(2)138  -114.7     0.0     0.0     0.0     0.0     0.0     0.0
                                                 35.3%                 3310 UBA(2)---138  1    10.9   -16.9    20.1
                                                 38.8%                 3314 VRBRAN(2)-69  1    12.7     6.8    14.3 0.975F
                                                 54.6%                 3329 S.M.ANTA-138  1   -23.6    10.2    25.6
 3314   69  0   1.018     0.0     0.0     4.4     0.0     1.9     0.0
 VRBRAN(2)-69  -115.7     0.0     0.0     1.4     0.0     0.0     0.0
                                                 37.8%                 3313 VRBRAN(2)138  1   -12.7    -6.5    14.0
                                                 40.1%                 3315 VRBRAN(1)-69  1    10.9     3.4    11.2
                                                 54.2%                 3328 GUIRIC----69  1    -2.6     3.5     4.3
 3315   69  0   1.017     0.0     0.0    10.9     0.0     0.0     0.0
 VRBRAN(1)-69  -115.8     0.0     0.0     3.4     0.0     0.0     0.0
                                                 40.1%                 3314 VRBRAN(2)-69  1   -10.9    -3.4    11.2
 3316   69 -1   1.007     4.1     0.0     5.3     0.0     0.0     0.0
 U.ITUERE--69  -115.1     1.2     0.0     4.1     0.0     0.0     0.0
                                                 12.5%                 3332 U.ITUERE-138  1    -1.2    -2.9     3.1
CEPEL - CENTRO DE PESQUISAS DE ENERGIA ELETRICA - PROGRAMA DE ANALISE DE REDES - V08MAR05A                                PAG. 245

ANUAL 06/07 * SETEMBRO 2006 PESADA S/SE 19H N/NE 19H * ANAT0 - FSE - C13
RELATORIO COMPLETO DO SISTEMA * AREA 18 * *      CATAGUAZES LEOPOLDINA       *

X----------------- D A D O S  -  B A R R A -------------------------X------------ F L U X O S  -  C I R C U I T O S ------------X
 DA BARRA      TENSAO GERACAO INJ EQV  CARGA   ELO CC  SHUNT    MOTOR
```

```
 NUM. KV TIPO   MOD/     MW/     MW/     MW/     MW/   Mvar/     MW/
     NOME       ANG     Mvar    Mvar    Mvar    Mvar   EQUIV    Mvar  PARA BARRA                    FLUXOS
                                                FLUXO % SHUNT L         NUM.     NOME     NC     MW    Mvar  MVA/V_d   TAP  DEFAS TIE
X------------X-------X-------X-------X-------X-------X-------X-------X----X------------X--X-------X-------X-------X------X-----X---X

 3317  138  0   1.010     0.0     0.0     5.5     0.0     0.0     0.0
 TOCANT---138  -115.1     0.0     0.0     1.5     0.0     0.0     0.0
                                                2.7%                    3310 UBA(2)---138  1    -0.1     2.6     2.6
                                                7.1%                    3332 U.ITUERE-138  1    -5.4    -4.1     6.7
 3318   69  0   1.031     0.0     0.0    12.6     0.0     2.2     0.0
 CATAG(1)--69  -119.9     0.0     0.0     6.8     0.0     0.0     0.0
                                               68.4%                    3306 CATAG(2)--69  1   -12.6    -4.6    13.0
 3319   69 -1   0.985    16.2     0.0    23.6     0.0     3.5     0.0
 MANHUACU--69  -132.6     5.8     0.0    10.7     0.0     0.0     0.0
                                               20.7%                    9001 MANHUACU-138  1    -7.4    -1.4     7.6
 3320   69  0   0.971     0.0     0.0     5.8     0.0     0.0     0.0
 REALEZA---69  -111.6     0.0     0.0     1.5     0.0     0.0     0.0
                                               22.0%                    3322 MATIPO----69  1    -5.8    -1.5     6.2
 3321  138  0   0.999     0.0     0.0     0.0     0.0     0.0     0.0
 MATIPO---138  -109.3     0.0     0.0     0.0     0.0     0.0     0.0
                                               45.2%                    3322 MATIPO----69  1    10.8     3.2    11.3 1.000F
                                               78.1%                    3323 U.GRANAD-138  1   -38.6     9.7    39.8
                                               43.2%                    3329 S.M.ANTA-138  1    27.8   -12.9    30.7
 3322   69 -1   0.990     0.5     0.0     5.4     0.0     0.0     0.0
 MATIPO----69  -110.9     0.4     0.0     2.0     0.0     0.0     0.0
                                               21.8%                    3320 REALEZA---69  1     5.9     1.3     6.1
                                               45.2%                    3321 MATIPO---138  1   -10.8    -2.9    11.3
 3323   69  1   1.000    38.7     0.0     0.0     0.0     0.0     0.0
 U.GRANAD-138  -109.0    -9.8     0.0     0.0     0.0     0.0     0.0
                                               78.3%                    3321 MATIPO---138  1    38.7    -9.8    39.9
 3324   69  0   1.019     0.0     0.0     8.5     0.0     3.7     0.0
 APARAIBA--69  -119.8     0.0     0.0     2.2     0.0     0.0     0.0
                                               56.5%                    3300 APARAIBA-138  1    -8.5     1.5     8.5
 3325   69  0   1.030     0.0     0.0     2.7     0.0     0.0     0.0
 LARANJ(DR)69  -118.3     0.0     0.0     1.4     0.0     0.0     0.0
                                               57.8%                    3306 CATAG(2)--69  1     3.1    -7.7     8.1
                                               59.6%                    3309 MURIAE(1)-69  1    -5.8     6.3     8.4
 3326   69 -1   1.018     6.9     0.0     2.6     0.0     0.0     0.0
 U.ERVALIA-69  -114.5    -2.0     0.0     1.1     0.0     0.0     0.0
                                               47.3%                    3328 GUIRIC----69  1     4.3    -3.1     5.2
 3327   69 -1   1.045    38.4     0.0     2.1     0.0     0.0     0.0
 U.ENCOBER-69  -114.0   -11.1     0.0     1.2     0.0     0.0     0.0
                                               61.2%                    3308 MURIAE(2)-69  1    36.3   -12.3    36.7
CEPEL - CENTRO DE PESQUISAS DE ENERGIA ELETRICA - PROGRAMA DE ANALISE DE REDES - V08MAR05A                                PAG. 246

ANUAL 06/07 * SETEMBRO 2006 PESADA S/SE 19H N/NE 19H * ANAT0 - FSE - C13
RELATORIO COMPLETO DO SISTEMA * AREA 18 * *      CATAGUAZES LEOPOLDINA       *

X----------------- D A D O S  -  B A R R A -------------------------X------------ F L U X O S  -  C I R C U I T O S ------------X
 DA BARRA      TENSAO GERACAO INJ EQV  CARGA   ELO CC  SHUNT    MOTOR
 NUM. KV TIPO   MOD/     MW/     MW/     MW/     MW/   Mvar/     MW/
     NOME       ANG     Mvar    Mvar    Mvar    Mvar   EQUIV    Mvar  PARA BARRA                    FLUXOS
                                                FLUXO % SHUNT L         NUM.     NOME     NC     MW    Mvar  MVA/V_d   TAP  DEFAS TIE
X------------X-------X-------X-------X-------X-------X-------X-------X----X------------X--X-------X-------X-------X------X-----X---X

 3328   69  0   1.016     0.0     0.0     1.6     0.0     0.0     0.0
 GUIRIC----69  -115.1     0.0     0.0     0.8     0.0     0.0     0.0
                                               56.5%                    3314 VRBRAN(2)-69  1     2.7    -3.7     4.5
                                               46.3%                    3326 U.ERVALIA-69  1    -4.3     2.9     5.1
 3329  138  0   1.001     0.0     0.0     3.2     0.0     0.0     0.0
```

```
 S.M.ANTA-138  -112.8     0.0     0.0     2.1     0.0     0.0     0.0
                                                57.1%                 3313 VRBRAN(2)138  1    24.0   -12.1    26.8
                                                40.7%                 3321 MATIPO---138  1   -27.2    10.0    28.9
 3330  138 -1   1.020     6.6     0.0     0.0     0.0     0.0     0.0
 U.GUARY--138  -114.7     1.5     0.0     0.0     0.0     0.0     0.0
                                                 6.3%                 3332 U.ITUERE-138  1     6.6     3.2     7.2
                                                 1.4%                 4101  JFORA1---13  1     0.0    -1.6     1.6                41
 3331   69  0   1.013     0.0     0.0    10.8     0.0     1.8     0.0
 SJNEPUMUC-69  -117.1     0.0     0.0     4.3     0.0     0.0     0.0
                                                57.6%                 3304 N.U.MAUR--69  1   -10.8    -2.5    10.9
 3332  138  0   1.013     0.0     0.0     0.0     0.0     0.0     0.0
 U.ITUERE-138  -115.0     0.0     0.0     0.0     0.0     0.0     0.0
                                                12.5%                 3316 U.ITUERE--69  1     1.2     2.9     3.1 1.000F
                                                 6.2%                 3317 TOCANT---138  1     5.4     2.5     5.9
                                                 7.4%                 3330 U.GUARY--138  1    -6.6    -5.5     8.4
 3333  138 -1   1.029    60.8     0.0     0.0     0.0     0.0     0.0
 U.TRIUNF-138  -114.9    17.7     0.0     0.0     0.0     0.0     0.0
                                                41.3%                 3303 N.U.MAUR-138  1    44.5    -2.0    43.3
                                                23.6%                 3310 UBA(2)---138  1    16.3    19.7    24.8
 3334   69  0   1.034     0.0     0.0     4.0     0.0     1.3     0.0
 ASTOLFO.D-69  -116.5     0.0     0.0     0.9     0.0     0.0     0.0
                                                29.2%                 3304 N.U.MAUR--69  1    -6.9    -0.6     6.7
                                                12.9%                 3335 RODEIR(DR)69  1     2.9     1.0     3.0
 3335   69  0   1.030     0.0     0.0     2.9     0.0     0.0     0.0
 RODEIR(DR)69  -116.6     0.0     0.0     1.1     0.0     0.0     0.0
                                                13.1%                 3334 ASTOLFO.D-69  1    -2.9    -1.1     3.0
 3336   69  0   1.016     0.0     0.0     4.3     0.0     0.0     0.0
 DIVIN(DR)69   -117.6     0.0     0.0     1.8     0.0     0.0     0.0
                                                14.3%                 3312 UBA(1)----69  1    -4.3    -1.8     4.6
 3337  138  0   1.003     0.0     0.0     0.0     0.0     0.0     0.0
 U.BRAUNA-138  -116.7     0.0     0.0     0.0     0.0     0.0     0.0
                                                11.7%                 3305 CATAG(2)-138  1     8.9    -8.5    12.3
                                                11.7%                 3307 MURIAE(2)138  1    -8.9     8.5    12.3
CEPEL - CENTRO DE PESQUISAS DE ENERGIA ELETRICA - PROGRAMA DE ANALISE DE REDES - V08MAR05A                          PAG. 247

ANUAL 06/07 * SETEMBRO 2006 PESADA S/SE 19H N/NE 19H * ANAT0 - FSE - C13
RELATORIO COMPLETO DO SISTEMA * AREA 18 * *      CATAGUAZES LEOPOLDINA       *

X----------------- D A D O S  -  B A R R A -------------------------X------------ F L U X O S  -  C I R C U I T O S ------------X
 DA BARRA      TENSAO GERACAO INJ EQV  CARGA   ELO CC  SHUNT    MOTOR
 NUM. KV TIPO   MOD/     MW/     MW/     MW/     MW/   Mvar/     MW/
     NOME       ANG     Mvar    Mvar    Mvar    Mvar   EQUIV    Mvar  PARA BARRA                    FLUXOS
                                                FLUXO % SHUNT L         NUM.     NOME     NC     MW    Mvar  MVA/V_d   TAP  DEFAS TIE
X------------X-------X-------X-------X-------X-------X-------X-------X----X------------X--X-------X-------X-------X------X-----X---X

 9001  138  0   0.989     0.0     0.0     0.0     0.0     0.0     0.0
 MANHUACU-138  -131.9     0.0     0.0     0.0     0.0     0.0     0.0
                                                20.7%                 3319 MANHUACU--69  1     7.4     1.5     7.6 1.000F
                                                20.7%                 4063 MANHUACU-138  1    -7.4    -1.5     7.6                03


TOTAIS DA AREA 18


X--------X--------X--------X--------X--------X--------X--------X--------X
  GERACAO  INJ EQV   CARGA   ELO CC    SHUNT   EXPORT   IMPORT   PERDAS
    MW/      MW/      MW/     MW/     Mvar/     MW/      MW/      MW/
   Mvar     Mvar     Mvar    Mvar     EQUIV    Mvar     Mvar     Mvar
X--------X--------X--------X--------X--------X--------X--------X--------X
```

```
    207.5      0.0    210.3      0.0     38.0      0.1      7.4      4.5
      9.8      0.0     82.0      0.0      0.0      0.0     15.5    -18.8
CEPEL - CENTRO DE PESQUISAS DE ENERGIA ELETRICA - PROGRAMA DE ANALISE DE REDES - V08MAR05A                                PAG. 248

ANUAL 06/07 * SETEMBRO 2006 PESADA S/SE 19H N/NE 19H * ANAT0 - FSE - C13
RELATORIO COMPLETO DO SISTEMA * AREA 19 * *            TRACTEBEL             *

X----------------- D A D O S  -  B A R R A -------------------------X------------ F L U X O S  -  C I R C U I T O S ------------X
 DA BARRA      TENSAO GERACAO INJ EQV  CARGA   ELO CC  SHUNT    MOTOR
 NUM. KV TIPO   MOD/     MW/     MW/     MW/     MW/   Mvar/     MW/
     NOME       ANG     Mvar    Mvar    Mvar    Mvar   EQUIV    Mvar  PARA BARRA                    FLUXOS
                                                FLUXO % SHUNT L         NUM.     NOME     NC     MW    Mvar  MVA/V_d   TAP  DEFAS TIE
X------------X-------X-------X-------X-------X-------X-------X-------X----X------------X--X-------X-------X-------X------X-----X---X

  900    1 -1   0.979     0.0     0.0     0.0     0.0     0.0     0.0
 ALEGRETE-000   -46.4     0.0     0.0     0.0     0.0     0.0     0.0
                                                 0.0%                  1182 Alegrete--69  1     0.0     0.0     0.0               31
  901    1  1   1.000    25.0     0.0     0.0     0.0     0.0     0.0
 CHARQUEA-1GR   -59.8    12.3     0.0     0.0     0.0     0.0     0.0
                                                37.7%                   951 Charquea-230  1    30.0    12.3    32.4               20
                                                16.7%                  2054 SJeronimo-13  1    -5.0     0.0     5.0               70
  902   14  1   1.000    28.0     0.0     0.0     0.0     0.0     0.0
 CogLages-1GR   -64.9     2.4     0.0     0.0     0.0     0.0     0.0
                                                80.3%                  2880 CogLages-138  1    28.0     2.4    28.1               25
  904    1  1   0.990  1405.0     0.0     0.5     0.0     0.0     0.0
 ITA------5GR   -43.3  -296.2     0.0     0.0     0.0     0.0     0.0
                                                89.2%                   996 Ita----G-525  1  1404.5  -296.2  1449.9
  905    1 -1   1.025     0.0     0.0     0.0     0.0     0.0     0.0
 ITA------000   -50.7     0.0     0.0     0.0     0.0     0.0     0.0
                                                 0.0%                   996 Ita----G-525  1     0.0     0.0     0.0
  907    1  1   0.970    25.0     0.0     2.5     0.0     0.0     0.0
 JLACA1E2-1GR   -73.2    -6.6     0.0     1.2     0.0     0.0     0.0
                                                21.2%                  1007 JLacerdA-138  1    22.5    -7.8    24.6               20
  909    1  1   0.970    33.0     0.0     3.3     0.0     0.0     0.0
 JLACA3E4-1GR   -71.7     9.5     0.0     1.6     0.0     0.0     0.0
                                                19.9%                  1006 JLacerdA-230  1    29.7     7.9    31.7               20
  911    1  1   0.970    80.0     0.0     8.0     0.0     0.0     0.0
 JLACB5E6-1GR   -70.0    11.3     0.0     4.0     0.0     0.0     0.0
                                                23.9%                  1010 JLacerdB-230  1    72.0     7.3    74.6               20
  913    1  1   0.970   180.0     0.0    18.0     0.0     0.0     0.0
 JLACERC7-1GR   -70.2    28.3     0.0     9.0     0.0     0.0     0.0
                                                43.0%                  1011 JLacerdC-230  1    80.8     9.6    83.9               20
                                                43.2%                  1011 JLacerdC-230  2    81.2     9.6    84.3               20
  915    1  1   0.990  1026.0     0.0     0.6     0.0     0.0     0.0
 MACHADIN-3GR   -44.0  -186.5     0.0     0.0     0.0     0.0     0.0
                                                84.0%                  1030 Machadin-525  1  1025.4  -186.5  1052.7               20
  916    1 -1   1.026     0.0     0.0     0.0     0.0     0.0     0.0
 MACHADIN-000   -52.0     0.0     0.0     0.0     0.0     0.0     0.0
                                                 0.0%                  1030 Machadin-525  1     0.0     0.0     0.0               20
CEPEL - CENTRO DE PESQUISAS DE ENERGIA ELETRICA - PROGRAMA DE ANALISE DE REDES - V08MAR05A                                PAG. 249

ANUAL 06/07 * SETEMBRO 2006 PESADA S/SE 19H N/NE 19H * ANAT0 - FSE - C13
RELATORIO COMPLETO DO SISTEMA * AREA 19 * *            TRACTEBEL             *

X----------------- D A D O S  -  B A R R A -------------------------X------------ F L U X O S  -  C I R C U I T O S ------------X
 DA BARRA      TENSAO GERACAO INJ EQV  CARGA   ELO CC  SHUNT    MOTOR
 NUM. KV TIPO   MOD/     MW/     MW/     MW/     MW/   Mvar/     MW/
     NOME       ANG     Mvar    Mvar    Mvar    Mvar   EQUIV    Mvar  PARA BARRA                    FLUXOS
                                                FLUXO % SHUNT L         NUM.     NOME     NC     MW    Mvar  MVA/V_d   TAP  DEFAS TIE
```

```
X------------X-------X-------X-------X-------X-------X-------X-------X----X------------X--X-------X-------X-------X------X-----X---X

  917    1  1   1.000   203.0     0.0     0.0     0.0     0.0     0.0
 PFUNDO---2GR   -51.3    -6.0     0.0     0.0     0.0     0.0     0.0
                                                69.8%                  1041 PFundo---230  1   203.0    -6.0   203.1               20
  918    1 -1   1.005     0.0     0.0     0.0     0.0     0.0     0.0
 PFUNDO---000   -56.7     0.0     0.0     0.0     0.0     0.0     0.0
                                                 0.0%                  1041 PFundo---230  1     0.0     0.0     0.0               20
  919    1  1   1.030   655.0     0.0     1.2     0.0     0.0     0.0
 SOSOR1A4-4GR   -43.4    55.8     0.0     0.0     0.0     0.0     0.0
                                                80.8%                  1047 SOsorio--230  1   653.8    55.8   637.1               20
  920    1 -1   1.025     0.0     0.0     0.0     0.0     0.0     0.0
 SOSOR1A4-000   -49.4     0.0     0.0     0.0     0.0     0.0     0.0
                                                 0.0%                  1047 SOsorio--230  1     0.0     0.0     0.0               20
  921    1  1   1.030   315.0     0.0     0.6     0.0     0.0     0.0
 SOSOR5E6-2GR   -43.6    26.2     0.0     0.0     0.0     0.0     0.0
                                                77.9%                  1047 SOsorio--230  1   314.4    26.2   306.3               20
  922    1 -1   1.025     0.0     0.0     0.0     0.0     0.0     0.0
 SOSOR5E6-000   -49.4     0.0     0.0     0.0     0.0     0.0     0.0
                                                 0.0%                  1047 SOsorio--230  1     0.0     0.0     0.0               20
  923    1 -1   0.952     0.0     0.0     0.0     0.0     0.0     0.0
 WARJONA4-000   -85.4     0.0     0.0     0.0     0.0     0.0     0.0
                                                 0.0%                  1890 CGImbiru-138  1     0.0     0.0     0.0               26
  924    1 -1   0.952     0.0     0.0     0.0     0.0     0.0     0.0
 WARJONA5-000   -85.4     0.0     0.0     0.0     0.0     0.0     0.0
                                                 0.0%                  1890 CGImbiru-138  1     0.0     0.0     0.0               26
  925    1  1   0.980  1378.0     0.0     0.6     0.0     0.0     0.0
 SSANTIAG-4GR   -40.5   -81.2     0.0     0.0     0.0     0.0     0.0
                                                SUP 100.4%              1060 SSantiag-525  1  1377.4   -81.2  1408.0               20
  926    1 -1   1.001     0.0     0.0     0.0     0.0     0.0     0.0
 SSANTIAG-000   -49.7     0.0     0.0     0.0     0.0     0.0     0.0
                                                 0.0%                  1060 SSantiag-525  1     0.0     0.0     0.0               20
  927    1  1   0.970    32.0     0.0     0.0     0.0     0.0     0.0
 WARJONA1-1GR   -79.0     6.7     0.0     0.0     0.0     0.0     0.0
                                                67.4%                  1890 CGImbiru-138  1    32.0     6.7    33.7               26
  928    1  1   0.970    32.0     0.0     0.0     0.0     0.0     0.0
 WARJONA2-1GR   -79.0     6.7     0.0     0.0     0.0     0.0     0.0
                                                67.4%                  1890 CGImbiru-138  1    32.0     6.7    33.7               26
CEPEL - CENTRO DE PESQUISAS DE ENERGIA ELETRICA - PROGRAMA DE ANALISE DE REDES - V08MAR05A                                  PAG. 250

ANUAL 06/07 * SETEMBRO 2006 PESADA S/SE 19H N/NE 19H * ANAT0 - FSE - C13
RELATORIO COMPLETO DO SISTEMA * AREA 19 * *            TRACTEBEL             *

X----------------- D A D O S  -  B A R R A ------------------------X------------ F L U X O S  -  C I R C U I T O S ------------X
 DA BARRA      TENSAO GERACAO INJ EQV  CARGA   ELO CC  SHUNT    MOTOR
 NUM. KV TIPO   MOD/     MW/     MW/     MW/     MW/   Mvar/     MW/
     NOME       ANG     Mvar    Mvar    Mvar    Mvar   EQUIV    Mvar  PARA BARRA                    FLUXOS
                                                FLUXO % SHUNT L         NUM.     NOME     NC     MW    Mvar  MVA/V_d   TAP  DEFAS TIE
X------------X-------X-------X-------X-------X-------X-------X-------X----X------------X--X-------X-------X-------X------X-----X---X

  929    1  1   0.970    32.0     0.0     0.0     0.0     0.0     0.0
 WARJONA3-1GR   -79.0     6.7     0.0     0.0     0.0     0.0     0.0
                                                67.4%                  1890 CGImbiru-138  1    32.0     6.7    33.7               26
  996  525  0   1.025     0.0     0.0     0.0     0.0     0.0     0.0
 Ita----G-525   -50.7     0.0     0.0     0.0     0.0     0.0     0.0
                                                89.2%                   904 ITA------5GR  1 -1402.9   490.3  1449.9 1.000F
                                                 0.0%                   905 ITA------000  1     0.0     0.0     0.0 1.000F
                                                30.8%                   995 Ita------525  1   701.5  -245.1   725.0               20
                                                30.8%                   995 Ita------525  2   701.5  -245.1   725.0               20
```

TOTAIS DA AREA 19

| GERACAO MW/ Mvar | INJ EQV MW/ Mvar | CARGA MW/ Mvar | ELO CC MW/ Mvar | SHUNT Mvar/ EQUIV | EXPORT MW/ Mvar | IMPORT MW/ Mvar | PERDAS MW/ Mvar |
|---|---|---|---|---|---|---|---|
| 5449.0 | 0.0 | 35.3 | 0.0 | 0.0 | 5413.0 | 5.0 | 5.7 |
| -410.7 | 0.0 | 15.9 | 0.0 | 0.0 | 38.8 | 1185.0 | 719.6 |



| DADOS - BARRA | | | | | | | | FLUXOS - CIRCUITOS | | | | | | | | | |
|---|---|---|---|---|---|---|---|---|---|---|---|---|---|---|---|---|---|
| DA BARRA NUM. KV TIPO NOME | TENSAO MOD/ ANG | GERACAO MW/ Mvar | INJ EQV MW/ Mvar | CARGA MW/ Mvar | ELO CC MW/ Mvar FLUXO % | SHUNT Mvar/ EQUIV SHUNT L | MOTOR MW/ Mvar | PARA BARRA NUM. | NOME | NC | MW | FLUXOS Mvar | MVA/V_d | TAP | DEFAS | TIE |
| 930 138 0 | 1.001 | 0.0 | 0.0 | 0.0 | 0.0 | 0.0 | 0.0 | | | | | | | | | |
| Alegrete-138 | -48.1 | 0.0 | 0.0 | 0.0 | 0.0 | 0.0 | 0.0 | | | | | | | | | |
| | | | | | 38.3% | | | 1182 | Alegrete--69 | 1 | -7.7 | 5.7 | 9.6 | 0.956* | | 31 |
| | | | | | 38.1% | | | 1182 | Alegrete--69 | 2 | -7.7 | 5.6 | 9.5 | 0.956* | | 31 |
| | | | | | 31.8% | | | 1276 | SMaria1--138 | 1 | 15.4 | -11.3 | 19.1 | | | 31 |
| 933 525 0 | 1.015 | 0.0 | 0.0 | 5.3 | 0.0 | 0.0 | 0.0 | | | | | | | | | |
| Areia----525 | -54.2 | 0.0 | 0.0 | 0.0 | 0.0 | 0.0 | 0.0 | | | | | | | | | |
| | | | | | 35.0% | | | 824 | GBMunhoz-525 | 1 | -767.3 | 103.5 | 763.2 | | | 21 |
| | | | | | 34.4% | | | 824 | GBMunhoz-525 | 2 | -755.3 | 100.7 | 751.1 | | | 21 |
| | | | | | 51.4% | | | 856 | SSegredo-525 | 1 | -1176.5 | 143.6 | 1168.2 | | | 21 |
| | | | | | 54.8% | | | 895 | Bateias--525 | 1 | 1173.7 | 24.2 | 1157.2 | | | 21 |
| | | | | | 33.1% | | | 934 | Areia----230 | 1 | 219.2 | 52.9 | 222.3 | | | |
| | | | | | 9.7% | | | 955 | CNovos---525 | 1 | -44.8 | -202.9 | 204.8 | | | |
| | | | | | 46.2% | | | 959 | Curitiba-525 | 1 | 1023.2 | -3.1 | 1008.5 | | | |
| | | | | | 16.9% | | | 999 | IvaiporE-525 | 1 | 322.5 | -218.9 | 384.1 | | | |
| 934 230 0 | 1.040 | 0.0 | 0.0 | 0.0 | 0.0 | 0.0 | 0.0 | | | | | | | | | |
| Areia----230 | -55.7 | 0.0 | 0.0 | 0.0 | 0.0 | 0.0 | 0.0 | | | | | | | | | |
| | | | | | 14.7% | | | 823 | Areia----138 | 1 | -1.2 | 23.0 | 22.1 | 1.004* | | 22 |
| | | | | | 51.6% | | | 829 | PGrossaN-230 | 1 | 169.3 | 21.5 | 164.1 | | | 21 |
| | | | | | 53.4% | | | 834 | SMateus--230 | 1 | 198.9 | -14.0 | 191.7 | | | 21 |
| | | | | | 32.1% | | | 933 | Areia----525 | 1 | -219.1 | -46.9 | 215.4 | 1.032* | | |
| | | | | | 22.1% | | | 1047 | SOsorio--230 | 1 | -73.4 | -3.1 | 70.6 | | | |
| | | | | | 22.2% | | | 1047 | SOsorio--230 | 2 | -73.5 | -3.1 | 70.7 | | | |
| | | | | | 14.6% | | | 9335 | Areia----FIC | 1 | -1.1 | 22.7 | 21.8 | 1.004* | | 22 |
| 938 525 0 | 1.023 | 0.0 | 0.0 | 1.6 | 0.0 | 0.0 | 0.0 | | | | | | | | | |
| Blumenau-525 | -66.7 | 0.0 | 0.0 | 0.0 | 0.0 | 0.0 | 0.0 | | | | | | | | | |
| | | | | | 61.1% | | | 939 | Blumenau-230 | 1 | 420.1 | -7.8 | 410.5 | | | |
| | | | | | 60.4% | | | 939 | Blumenau-230 | 2 | 415.3 | -7.9 | 405.9 | | | |
| | | | | | 55.3% | | | 939 | Blumenau-230 | 3 | 380.6 | 3.2 | 371.9 | | | |
| | | | | | 27.3% | | | 955 | CNovos---525 | 1 | -796.1 | -51.5 | 779.5 | | | |
| | | | | | 29.4% | | | 955 | CNovos---525 | 2 | -796.4 | -50.2 | 779.7 | | | |
| | | | | | 30.2% | | | 959 | Curitiba-525 | 1 | 374.9 | 114.2 | 382.9 | | | |

```
RELATORIO COMPLETO DO SISTEMA * AREA 20 * *            ELETROSUL            *

X----------------- D A D O S  -  B A R R A -------------------------X------------ F L U X O S  -  C I R C U I T O S ------------X
 DA BARRA      TENSAO GERACAO INJ EQV  CARGA   ELO CC  SHUNT    MOTOR
 NUM. KV TIPO   MOD/     MW/     MW/     MW/     MW/   Mvar/     MW/
     NOME       ANG     Mvar    Mvar    Mvar    Mvar   EQUIV    Mvar  PARA BARRA                    FLUXOS
                                                FLUXO % SHUNT L         NUM.     NOME     NC     MW    Mvar  MVA/V_d   TAP  DEFAS TIE
X------------X-------X-------X-------X-------X-------X-------X-------X----X------------X--X-------X-------X-------X------X-----X---X

  939  230  0   1.020     0.0     0.0     0.0     0.0     0.0     0.0
 Blumenau-230   -69.3     0.0     0.0     0.0     0.0     0.0     0.0
                                              61.3%                 938 Blumenau-525  1  -419.5    27.2   412.2 0.996*
                                              60.6%                 938 Blumenau-525  2  -414.8    27.1   407.5 0.996*
                                              55.6%                 938 Blumenau-525  3  -380.6    14.4   373.3 0.996*
                                              80.3%                 940 Blumenau-138  1   122.7     7.1   120.5
                                              83.1%                 940 Blumenau-138  2   127.1     5.3   124.7
                                              81.6%                 940 Blumenau-138  3   124.7     6.2   122.4
                                              72.7%                 940 Blumenau-138  4   124.6     1.5   122.2
                                              51.8%                 947 Biguacu--230  1   115.6   -23.3   115.6
                                              33.3%                 991 Itajai---230  1   118.2   -11.3   116.4
                                              33.3%                 991 Itajai---230  2   118.2   -11.3   116.4
                                              41.6%                1015 Joinvill-230  1   135.0   -10.5   132.7
                                              41.6%                1015 Joinvill-230  2   134.9   -10.9   132.7
                                              44.6%                1034 Palhoca--230  1    94.1   -21.4    94.6
  940  138  0   1.040     0.0     0.0     0.0     0.0     0.0     0.0
 Blumenau-138   -73.5     0.0     0.0     0.0     0.0     0.0     0.0
                                              78.4%                 939 Blumenau-230  1  -122.2     1.8   117.5 1.025*
                                              81.1%                 939 Blumenau-230  2  -126.5     3.9   121.7 1.025*
                                              79.6%                 939 Blumenau-230  3  -124.2     2.8   119.4 1.025*
                                              71.0%                 939 Blumenau-230  4  -123.8     7.4   119.2 1.025*
                                              30.3%                 985 Ilhota---138  1    41.1    -6.1    40.0
                                              38.0%                2710 BluGarci-138  1    50.2     1.6    48.3               25
                                              38.0%                2710 BluGarci-138  2    50.2     1.6    48.3               25
                                              33.0%                2712 Blumena2-138  1    97.6    10.6    94.4               25
                                              32.5%                2712 Blumena2-138  2    96.5     4.0    92.8               25
                                              32.1%                2752 Gaspar---138  1    43.6    -6.7    42.4               25
                                              34.5%                2866 Timbo----138  1    48.6   -16.5    49.3               25
                                              41.5%                2874 Timbo--F-138  1    68.9    -4.5    66.4               25
  942  230  0   1.033     0.0     0.0     0.0     0.0     0.0     0.0
 EnseadaT-230   -77.2     0.0     0.0     0.0     0.0     0.0     0.0
                                              17.8%                 944 CaiacanT-230  1    48.9   -41.7    62.2
                                              17.8%                1032 PalhocaT-230  1   -48.9    41.7    62.2
  943  230  0   1.021     0.0     0.0     0.0     0.0     0.0     0.0
 Canoinha-230   -72.2     0.0     0.0     0.0     0.0     0.0     0.0
                                              34.6%                 834 SMateus--230  1  -109.4    11.7   107.7               21
                                              47.8%                2725 Canoinha-138  1    36.4    -3.9    35.9               25
                                              47.5%                2725 Canoinha-138  2    36.2    -3.8    35.6               25
                                              48.3%                2725 Canoinha-138  3    36.8    -3.9    36.3               25
  944  230  0   1.033     0.0     0.0     0.0     0.0     0.0     0.0
 CaiacanT-230   -77.3     0.0     0.0     0.0     0.0     0.0     0.0
                                              15.3%                 942 EnseadaT-230  1   -48.8    26.0    53.5
                                              15.3%                 945 Desterro-230  1    48.8   -26.0    53.5
CEPEL - CENTRO DE PESQUISAS DE ENERGIA ELETRICA - PROGRAMA DE ANALISE DE REDES - V08MAR05A                                PAG. 253

ANUAL 06/07 * SETEMBRO 2006 PESADA S/SE 19H N/NE 19H * ANAT0 - FSE - C13
RELATORIO COMPLETO DO SISTEMA * AREA 20 * *            ELETROSUL            *

X----------------- D A D O S  -  B A R R A -------------------------X------------ F L U X O S  -  C I R C U I T O S ------------X
 DA BARRA      TENSAO GERACAO INJ EQV  CARGA   ELO CC  SHUNT    MOTOR
 NUM. KV TIPO   MOD/     MW/     MW/     MW/     MW/   Mvar/     MW/
```

```
     NOME       ANG     Mvar    Mvar    Mvar    Mvar   EQUIV    Mvar  PARA BARRA                    FLUXOS
                                               FLUXO % SHUNT L         NUM.     NOME     NC     MW    Mvar  MVA/V_d   TAP  DEFAS TIE
X------------X-------X-------X-------X-------X-------X-------X-------X----X------------X--X-------X-------X-------X------X-----X---X

  945  230  0   1.035     0.0     0.0     0.0     0.0     0.0     0.0
 Desterro-230   -77.7     0.0     0.0     0.0     0.0     0.0     0.0
                                            14.9%                  944 CaiacanT-230  1   -48.7    22.9    52.0
                                            34.7%                 2706 Desterro-138  1    48.7   -22.9    52.0                25
  947  230  0   1.019     0.0     0.0     0.0     0.0     0.0     0.0
 Biguacu--230   -76.1     0.0     0.0     0.0     0.0     0.0     0.0
                                            50.4%                  939 Blumenau-230  1  -113.0    18.4   112.4
                                            46.9%                  948 Biguacu--138  1    65.8    28.5    70.4                25
                                            11.3%                 1010 JLacerdB-230  1   -25.5    -2.4    25.2
                                            19.6%                 1032 PalhocaT-230  1    49.1   -49.7    68.5
                                             6.8%                 1034 Palhoca--230  1    23.7     5.2    23.8
  951  230  0   1.021     0.0     0.0     2.4     0.0     0.0     0.0
 Charquea-230   -64.1     0.0     0.0     0.0     0.0     0.0     0.0
                                            35.9%                  901 CHARQUEA-1GR  1   -30.0    -9.8    30.9 1.050F         19
                                            20.5%                 1202 AFPiratin-69  1    18.0     3.7    18.0 1.014*         70
                                            96.5%                 1203 Charquead-69  1    76.9    40.1    85.0 0.979*         70
                                            47.7%                 1255 SCruz1-Y-230  1   -92.1    12.7    91.0                23
                                            21.7%                 1258 CInduPAl-230  1    30.2   -29.6    41.4                23
                                             9.8%                 2086 Scharlau-230  1    -5.5   -17.1    17.6                23
  954  230  0   0.985     0.0     0.0     0.0     0.0     0.0     0.0
 CMourao--230   -64.2     0.0     0.0     0.0     0.0     0.0     0.0
                                            82.0%                  860 CMourao--138  1   118.6    24.9   123.0 0.971*         22
                                            23.3%                  878 Apucaran-230  1    66.8   -28.0    73.6                21
                                            32.5%                 1031 MaringaF-230  1   100.5   -11.3   102.6
                                            41.4%                 1047 SOsorio--230  1  -142.3     8.6   144.8
                                            41.7%                 1047 SOsorio--230  2  -143.5     5.9   145.8
  955  525  0   1.030     0.0     0.0     2.5     0.0     0.0     0.0
 CNovos---525   -53.7     0.0     0.0     0.0     0.0     0.0     0.0                                  0.0 SHL
                                             3.3%     0.0           933 Areia----525  1    44.9   -57.1    70.5
                                            28.1%                  938 Blumenau-525  1   812.0  -146.4   800.9
                                            30.2%                  938 Blumenau-525  2   812.6  -147.7   801.7
                                       SUP 109.5%                  956 CNovos---230  1  -721.7   232.7   736.0
                                            68.7%                  956 CNovos---230  2  -225.7    75.4   231.0
                                            32.6%                  964 Caxias---525  1   542.4  -167.5   551.0
                                            24.2%                 1030 Machadin-525  1  -538.4    82.8   528.8
                                            25.4%                 1030 Machadin-525  2  -728.7   127.8   718.1
```





```
X----------------- D A D O S  -  B A R R A ------------------------X------------ F L U X O S  -  C I R C U I T O S ------------X
 DA BARRA      TENSAO GERACAO INJ EQV  CARGA   ELO CC  SHUNT    MOTOR
 NUM. KV TIPO   MOD/     MW/     MW/     MW/     MW/   Mvar/     MW/
     NOME       ANG     Mvar    Mvar    Mvar    Mvar   EQUIV    Mvar  PARA BARRA                    FLUXOS
                                               FLUXO % SHUNT L         NUM.     NOME     NC     MW    Mvar  MVA/V_d   TAP  DEFAS TIE
X------------X-------X-------X-------X-------X-------X-------X-------X----X------------X--X-------X-------X-------X------X-----X---X

  956  230  0   1.021     0.0     0.0     0.0     0.0     0.0     0.0
 CNovos---230   -48.8     0.0     0.0     0.0     0.0     0.0     0.0
                                            66.1%                  936 BGrande--230  1  -472.3    97.4   472.5                64
                                            66.4%                  953 CNovos-G-230  1  -395.1    63.1   392.1                64
                                            66.4%                  953 CNovos-G-230  2  -395.1    63.1   392.1                64
                                       SUP 108.1%                  955 CNovos---525  1   722.5  -165.6   726.3 1.013*
                                            67.8%                  955 CNovos---525  2   226.2   -54.3   227.9 1.013*
                                            95.9%                  957 CNovos-A-138  1   146.8     3.5   143.9
```

```
                                                 54.7%                 958 CNovos-B-138  1    83.6    -3.7    82.0
                                                 54.5%                 958 CNovos-B-138  2    83.3    -3.5    81.7
 957  138  0   1.031     0.0     0.0     0.0     0.0     0.0     0.0
CNovos-A-138   -53.4     0.0     0.0     0.0     0.0     0.0     0.0
                                                 94.7%                 956 CNovos---230  1  -146.2     8.4   142.1 1.013*
                                                 70.7%                2750 CNovos1Y-138  1   146.2    -8.4   142.1               25
 958  138  0   1.031     0.0     0.0     0.0     0.0     0.0     0.0
CNovos-B-138   -51.4     0.0     0.0     0.0     0.0     0.0     0.0
                                                 54.2%                 956 CNovos---230  1   -83.4     7.5    81.3 1.009*
                                                 54.0%                 956 CNovos---230  2   -83.1     7.3    81.0 1.009*
                                                 80.7%                2751 CNovos2Y-138  1   166.5   -14.9   162.2               25
 959  525  0   0.986     0.0     0.0     4.4     0.0  -145.9     0.0
Curitiba-525   -69.9     0.0     0.0     0.0     0.0     0.0     0.0                                 0.0 SHL
                                                 27.0%     0.0         895 Bateias--525  1   545.7  -135.2   569.9               21
                                                 46.6%                 933 Areia----525  1 -1002.3   -52.5  1017.5
                                                 37.5%                 938 Blumenau-525  1  -372.6  -283.3   474.6
                                                 67.0%                 960 Curitiba-230  1   413.0   162.6   450.0
                                                 66.8%                 960 Curitiba-230  2   411.8   162.5   448.8
 960  230  0   1.040     0.0     0.0     0.0     0.0     0.0     0.0
Curitiba-230   -72.8     0.0     0.0     0.0     0.0     0.0     0.0
                                                 48.3%                 821 Umbara-2-230  1   331.9    89.9   330.7               21
                                                 69.8%                 822 Umbara-1-230  1   476.7   140.7   478.0               21
                                                 16.1%                 834 SMateus--230  1   -51.4    14.2    51.3               21
                                                 62.3%                 959 Curitiba-525  1  -412.4  -139.0   418.5 1.075*
                                                 62.1%                 959 Curitiba-525  2  -411.2  -139.0   417.4 1.075*
                                                 11.2%                1015 Joinvill-230  1    33.0    16.6    35.6
                                                 11.2%                1015 Joinvill-230  2    33.3    16.7    35.8
CEPEL - CENTRO DE PESQUISAS DE ENERGIA ELETRICA - PROGRAMA DE ANALISE DE REDES - V08MAR05A                                PAG. 255

ANUAL 06/07 * SETEMBRO 2006 PESADA S/SE 19H N/NE 19H * ANAT0 - FSE - C13
RELATORIO COMPLETO DO SISTEMA * AREA 20 * *            ELETROSUL            *

X----------------- D A D O S  -  B A R R A ------------------------X------------ F L U X O S  -  C I R C U I T O S ------------X
 DA BARRA      TENSAO GERACAO INJ EQV  CARGA   ELO CC  SHUNT    MOTOR
 NUM. KV TIPO   MOD/     MW/     MW/     MW/     MW/   Mvar/     MW/
     NOME       ANG     Mvar    Mvar    Mvar    Mvar   EQUIV    Mvar  PARA BARRA                    FLUXOS
                                                FLUXO % SHUNT L         NUM.     NOME     NC      MW     Mvar  MVA/V_d   TAP  DEFAS TIE
X------------X-------X-------X-------X-------X-------X-------X-------X----X------------X--X-------X-------X-------X------X-----X---X

 962  230  0   1.035     0.0     0.0     0.0     0.0     0.0     0.0
Farroupi-230   -63.1     0.0     0.0     0.0     0.0     0.0     0.0
                                                 43.7%                 963 MClaro---230  1  -149.1    21.2   145.5
                                                 49.8%                1191 Caxias-C-230  1  -107.7   -10.4   104.6               23
                                                 49.8%                1191 Caxias-C-230  2  -107.7   -10.4   104.6               23
                                                 53.9%                1192 Caxias5--230  1   185.4     7.0   179.4
                                                  4.9%                1200 Caxias2--230  1     7.8    -7.2    10.3               23
                                                 15.7%                1206 Garibald-230  1    53.4     0.5    51.6               23
                                                 43.2%                1207 Farroupil-69  1    39.3     1.7    38.0 1.003*        32
                                                 44.9%                1207 Farroupil-69  2    40.8     1.7    39.5 1.003*        32
                                                  3.1%                1228 NPrata2--230  1     9.4     0.2     9.1               23
                                                 15.5%                2086 Scharlau-230  1    28.3    -4.3    27.7               23
 963  230  0   1.037     0.0     0.0     0.0     0.0     0.0     0.0
MClaro---230   -60.6     0.0     0.0     0.0     0.0     0.0     0.0
                                                 43.9%                 962 Farroupi-230  1   150.3   -20.3   146.2
                                                 10.0%                1041 PFundo---230  1   -33.4    -8.2    33.2
                                                 35.0%                1161 MClaro-G-230  1  -116.8    28.5   116.0               64
 964  525  0   1.031     0.0     0.0     4.4     0.0  -159.5     0.0
Caxias---525   -60.6     0.0     0.0     0.0     0.0     0.0     0.0
                                                 31.1%                 955 CNovos---525  1  -537.2   -72.6   525.7
                                                 29.3%                 965 Caxias---230  1   202.5    13.5   196.8
```

```
                                                  28.8%                965 Caxias---230  2   198.9    13.3   193.3
                                                  29.3%                965 Caxias---230  3   202.5    13.5   196.8
                                                  30.0%                976 Gravatai-525  1   521.2   -42.2   507.0
                                                  26.6%                995 Ita------525  1  -592.3   -85.0   580.3
 965  230  0   1.041     0.0     0.0     0.0     0.0     0.0     0.0
Caxias---230   -62.0     0.0     0.0     0.0     0.0     0.0     0.0
                                                  29.0%                964 Caxias---525  1  -202.5    -8.8   194.8 1.011*
                                                  28.5%                964 Caxias---525  2  -198.9    -8.7   191.3 1.011*
                                                  29.0%                964 Caxias---525  3  -202.5    -8.8   194.8 1.011*
                                                   5.8%               1191 Caxias-C-230  1   603.8    26.3   580.8              23
 967  138  0   1.014     0.0     0.0     0.0     0.0     0.0     0.0
Floriano-138   -78.6     0.0     0.0     0.0     0.0     0.0     0.0
                                                  30.2%                948 Biguacu--138  1   -20.7   -27.7    34.1              25
                                                  30.3%                968 Florianop-69  1     7.7    -0.7     7.6 1.038*
                                                  31.0%                968 Florianop-69  2     7.8    -0.7     7.7 1.038*
                                                  31.2%                968 Florianop-69  3     7.9    -0.8     7.8 1.038*
                                                  12.0%               1035 PalhocaE-138  1   -19.7     4.0    19.8
                                                  13.9%               1035 PalhocaE-138  2   -19.7     4.0    19.8
                                                  16.8%               2775 ItajaFaz-138  1   -19.2    -1.6    19.0              25
                                                  72.2%               2845 Rocado----13  1    56.0    23.5    59.9 0.980*       25
CEPEL - CENTRO DE PESQUISAS DE ENERGIA ELETRICA - PROGRAMA DE ANALISE DE REDES - V08MAR05A                                PAG. 256

ANUAL 06/07 * SETEMBRO 2006 PESADA S/SE 19H N/NE 19H * ANAT0 - FSE - C13
RELATORIO COMPLETO DO SISTEMA * AREA 20 * *            ELETROSUL             *

X----------------- D A D O S  -  B A R R A -------------------------X------------ F L U X O S  -  C I R C U I T O S ------------X
 DA BARRA      TENSAO GERACAO INJ EQV  CARGA   ELO CC  SHUNT    MOTOR
 NUM. KV TIPO   MOD/     MW/     MW/     MW/     MW/   Mvar/     MW/
     NOME       ANG     Mvar    Mvar    Mvar    Mvar   EQUIV    Mvar  PARA BARRA                    FLUXOS
                                                FLUXO % SHUNT L         NUM.     NOME     NC     MW    Mvar  MVA/V_d   TAP  DEFAS TIE
X------------X-------X-------X-------X-------X-------X-------X-------X----X------------X--X-------X-------X-------X------X-----X---X

 968   69  0   0.978     0.0     0.0     0.0     0.0     0.0     0.0
Florianop-69   -80.0     0.0     0.0     0.0     0.0     0.0     0.0
                                                  31.5%                967 Floriano-138  1    -7.6     0.9     7.9
                                                  32.2%                967 Floriano-138  2    -7.8     0.9     8.0
                                                  32.4%                967 Floriano-138  3    -7.9     1.0     8.1
                                                  43.3%               2735 Coqueiros-69  1    30.5     0.9    31.2              25
                                                  68.5%               2884 UsGarcia--69  1    -7.2    -3.7     8.2              25
 976  525  0   1.027     0.0     0.0     4.4     0.0     0.0     0.0
Gravatai-525   -63.2     0.0     0.0     0.0     0.0     0.0     0.0
                                                  30.1%                964 Caxias---525  1  -519.3   -53.1   508.2
                                                  11.5%                979 NSRita---525  1  -255.4    28.4   250.2
                                                  36.3%               1210 Gravata2-230  1   250.7     9.3   244.2              23
                                                  38.9%               1210 Gravata2-230  2   268.5     7.4   261.5              23
                                                  36.4%               1210 Gravata2-230  3   251.1     8.1   244.6              23
 978  230  0   1.023     0.0     0.0     0.0     0.0     0.0     0.0
Guaira-F-230   -61.4     0.0     0.0     0.0     0.0     0.0     0.0
                                                   0.6%                846 Guaira---230  1    55.5    24.7    59.4              21
                                                  59.5%               1086 Dourados-230  1   156.7   -16.0   154.0
                                                  67.0%               2458 CascavOe-230  1  -212.2    -8.7   207.6              21
 979  525  0   1.026     0.0     0.0     0.0     0.0     0.0     0.0
NSRita---525   -62.6     0.0     0.0     0.0     0.0     0.0     0.0
                                                  12.0%                976 Gravatai-525  1   255.6   -82.4   261.9
                                                  27.6%                980 NSRita---230  1   155.3   109.3   185.2 0.974*
                                                  27.6%                980 NSRita---230  2   155.3   109.3   185.2 0.974*
                                                  26.0%                995 Ita------525  1  -566.2  -136.3   567.9
 980  230  0   1.040     0.0     0.0     0.0     0.0     0.0     0.0
NSRita---230   -63.6     0.0     0.0     0.0     0.0     0.0     0.0
                                                  26.8%                979 NSRita---525  1  -155.3  -105.3   180.3
```

```
                                                 26.8%                 979 NSRita---525  2  -155.3  -105.3   180.3
                                                 33.9%                1204 PoloPetr-230  1   153.0   113.7   183.2              23
                                                 39.2%                1215 Itauba---230  1  -117.8    10.7   113.7              23
                                                 19.0%                1217 LajeadoY-230  1   -43.2    11.1    42.8              23
                                                 43.9%                1258 CInduPAl-230  1   106.2    25.0   104.9              23
                                                 43.9%                1258 CInduPAl-230  2   106.2    25.0   104.9              23
                                                 43.9%                1258 CInduPAl-230  3   106.2    25.0   104.9              23
CEPEL - CENTRO DE PESQUISAS DE ENERGIA ELETRICA - PROGRAMA DE ANALISE DE REDES - V08MAR05A                                PAG. 257

ANUAL 06/07 * SETEMBRO 2006 PESADA S/SE 19H N/NE 19H * ANAT0 - FSE - C13
RELATORIO COMPLETO DO SISTEMA * AREA 20 * *            ELETROSUL            *

X----------------- D A D O S  -  B A R R A -------------------------X------------ F L U X O S  -  C I R C U I T O S ------------X
 DA BARRA      TENSAO GERACAO INJ EQV  CARGA   ELO CC  SHUNT    MOTOR
 NUM. KV TIPO   MOD/     MW/     MW/     MW/     MW/   Mvar/     MW/
     NOME       ANG     Mvar    Mvar    Mvar    Mvar   EQUIV    Mvar  PARA BARRA                    FLUXOS
                                                FLUXO % SHUNT L         NUM.     NOME     NC     MW    Mvar  MVA/V_d   TAP  DEFAS TIE
X------------X-------X-------X-------X-------X-------X-------X-------X----X------------X--X-------X-------X-------X------X-----X---X

  985  138  0   1.030     0.0     0.0     0.0     0.0     0.0     0.0
 Ilhota---138   -75.9     0.0     0.0     0.0     0.0     0.0     0.0
                                                 30.0%                 940 Blumenau-138  1   -40.5     5.0    39.6
                                                 61.3%                 987 Ilhota-1-FIC  1    30.4    -8.5    30.7 1.018*
                                                 60.0%                 988 Ilhota-2-FIC  1    29.8    -8.0    30.0 1.018*
                                                 15.9%                 992 Itajai---138  1   -26.8     4.6    26.4
                                                 15.9%                 992 Itajai---138  2   -26.8     4.6    26.4
                                                 16.8%                2726 Cebrac1Y-138  1    16.5     2.1    16.2              25
                                                 16.6%                2752 Gaspar---138  1   -22.4     2.4    21.9              25
                                                 44.9%                2830 Picarras-138  1    39.6    -2.2    38.6              25
  986   69  0   1.031     0.0     0.0     0.0     0.0     0.0     0.0
 Ilhota----69   -78.6     0.0     0.0     0.0     0.0     0.0     0.0
                                                 58.0%                 987 Ilhota-1-FIC  1   -29.8    -1.8    29.0 1.004F
                                                 57.0%                 988 Ilhota-2-FIC  1   -29.3    -2.6    28.5 1.004F
                                                 45.6%                2776 ItajaiSal-69  1    29.6     2.2    28.7              25
                                                 45.6%                2776 ItajaiSal-69  2    29.6     2.2    28.7              25
  987    1  0   1.027     0.0     0.0     0.0     0.0     0.0     0.0
 Ilhota-1-FIC   -78.9     0.0     0.0     0.0     0.0     0.0     0.0
                                                 62.4%                 985 Ilhota---138  1   -30.4    10.2    31.2
                                                 58.2%                 986 Ilhota----69  1    29.9     1.6    29.1
                                                 57.7%                 989 Ilhota-1-1CS  1     0.5   -11.8    11.5
  988    1  0   1.027     0.0     0.0     0.0     0.0     0.0     0.0
 Ilhota-2-FIC   -79.0     0.0     0.0     0.0     0.0     0.0     0.0
                                                 61.0%                 985 Ilhota---138  1   -29.8     9.7    30.5
                                                 57.2%                 986 Ilhota----69  1    29.3     2.4    28.6
                                                 59.2%                 990 Ilhota-1-1CS  1     0.5   -12.1    11.8
  989    1  1   1.000     0.0     0.0     0.5     0.0     0.0     0.0
 Ilhota-1-1CS   -79.0    12.3     0.0     0.2     0.0     0.0     0.0
                                                 60.3%                 987 Ilhota-1-FIC  1    -0.5    12.1    12.1 0.956F
  990    1  1   1.000     0.0     0.0     0.5     0.0     0.0     0.0
 Ilhota-1-1CS   -79.1    12.6     0.0     0.2     0.0     0.0     0.0
                                                 61.9%                 988 Ilhota-2-FIC  1    -0.5    12.4    12.4 0.956F
  991  230  0   1.015     0.0     0.0     0.0     0.0     0.0     0.0
 Itajai---230   -71.5     0.0     0.0     0.0     0.0     0.0     0.0
                                                 33.2%                 939 Blumenau-230  1  -117.2     9.0   115.8
                                                 33.2%                 939 Blumenau-230  2  -117.2     9.0   115.8
                                                 77.2%                 992 Itajai---138  1   117.3    -8.9   115.9
                                                 77.2%                 992 Itajai---138  2   117.2    -9.0   115.7
CEPEL - CENTRO DE PESQUISAS DE ENERGIA ELETRICA - PROGRAMA DE ANALISE DE REDES - V08MAR05A                                PAG. 258

ANUAL 06/07 * SETEMBRO 2006 PESADA S/SE 19H N/NE 19H * ANAT0 - FSE - C13
```

```
RELATORIO COMPLETO DO SISTEMA * AREA 20 * *            ELETROSUL            *

X----------------- D A D O S  -  B A R R A -------------------------X------------ F L U X O S  -  C I R C U I T O S ------------X
 DA BARRA      TENSAO GERACAO INJ EQV  CARGA   ELO CC  SHUNT    MOTOR
 NUM. KV TIPO   MOD/     MW/     MW/     MW/     MW/   Mvar/     MW/
     NOME       ANG     Mvar    Mvar    Mvar    Mvar   EQUIV    Mvar  PARA BARRA                    FLUXOS
                                                FLUXO % SHUNT L         NUM.     NOME     NC     MW    Mvar  MVA/V_d   TAP  DEFAS TIE
X------------X-------X-------X-------X-------X-------X-------X-------X----X------------X--X-------X-------X-------X------X-----X---X

  992  138  0   1.030     0.0     0.0     0.0     0.0     0.0     0.0
 Itajai---138   -75.4     0.0     0.0     0.0     0.0     0.0     0.0
                                              16.0%                  985 Ilhota---138  1    26.8    -5.2    26.5
                                              16.0%                  985 Ilhota---138  2    26.8    -5.2    26.5
                                              76.3%                  991 Itajai---230  1  -116.7    17.0   114.4 1.012*
                                              76.2%                  991 Itajai---230  2  -116.5    17.1   114.3 1.012*
                                              21.7%                 2718 Brusque--138  1    31.9    -2.5    31.0                25
                                              32.8%                 2723 CambMBoi-138  1    53.0   -17.7    54.2                25
                                              51.9%                 2775 ItajaFaz-138  1    60.3     3.6    58.6                25
                                              23.9%                 2778 Itaipava-138  1    34.4    -7.2    34.2                25
  995  525  0   1.025     0.0     0.0     3.0     0.0  -157.7     0.0
 Ita------525   -50.8     0.0     0.0     0.0     0.0     0.0     0.0                                -315.4 SHL
                                              28.0%                  964 Caxias---525  1   597.9  -187.1   611.0
                                               5.3%  -157.7          973 Garabi-2-525  1     0.0   -66.9    65.3                33
                                              27.7%                  979 NSRita---525  1   575.6  -227.4   603.6
                                              30.8%                  996 Ita----G-525  1  -701.4   243.3   724.0                19
                                              30.8%                  996 Ita----G-525  2  -701.4   243.3   724.0                19
                                              11.5%                 1030 Machadin-525  1   244.6   -79.4   250.8
                                               6.8%  -157.7         1045 SAngelo--525  1    71.7    46.3    83.3
                                               7.3%                 1060 SSantiag-525  1   -90.2  -129.9   154.2
  999  525  0   1.030     0.0     0.0     3.1     0.0     0.0     0.0
 IvaiporE-525   -57.8     0.0     0.0     0.0     0.0     0.0     0.0                                -106.1 SHL
                                              13.7%                   66 IVAIPORA-525  1   318.0    43.8   311.6                01
                                              13.7%                   66 IVAIPORA-525  2   318.0    43.8   311.6                01
                                              13.8%                   66 IVAIPORA-525  3   313.5    75.6   313.1                01
                                              19.8%  -106.1          896 CascavOe-525  1  -486.9    42.8   474.6                21
                                              13.7%                  933 Areia----525  1  -320.7   -16.0   311.8
                                              29.7%                 1027 Londrina-525  1   685.7  -109.0   674.2
                                              26.6%                 1027 Londrina-525  2   687.7  -109.2   676.1
                                              32.4%                 1060 SSantiag-525  1  -758.9    14.8   737.0
                                              23.2%                 1060 SSantiag-525  2  -759.3    13.3   737.4
 1006  230  0   1.012     0.0     0.0     1.3     0.0     0.0     0.0
 JLacerdA-230   -74.0     0.0     0.0     0.0     0.0     0.0     0.0
                                              18.9%                  909 JLACA3E4-1GR  1   -29.6    -6.6    30.0 1.056F        19
                                              46.6%                 1007 JLacerdA-138  1    24.0    28.4    36.8
                                              46.6%                 1007 JLacerdA-138  2    24.0    28.5    36.8
                                              71.9%                 1008 JLacerdaA-69  1    59.1   -12.4    59.7 0.995*
                                              22.6%                 1010 JLacerdB-230  1   -78.8   -37.9    86.4
CEPEL - CENTRO DE PESQUISAS DE ENERGIA ELETRICA - PROGRAMA DE ANALISE DE REDES - V08MAR05A                                PAG. 259

ANUAL 06/07 * SETEMBRO 2006 PESADA S/SE 19H N/NE 19H * ANAT0 - FSE - C13
RELATORIO COMPLETO DO SISTEMA * AREA 20 * *            ELETROSUL            *

X----------------- D A D O S  -  B A R R A -------------------------X------------ F L U X O S  -  C I R C U I T O S ------------X
 DA BARRA      TENSAO GERACAO INJ EQV  CARGA   ELO CC  SHUNT    MOTOR
 NUM. KV TIPO   MOD/     MW/     MW/     MW/     MW/   Mvar/     MW/
     NOME       ANG     Mvar    Mvar    Mvar    Mvar   EQUIV    Mvar  PARA BARRA                    FLUXOS
                                                FLUXO % SHUNT L         NUM.     NOME     NC     MW    Mvar  MVA/V_d   TAP  DEFAS TIE
X------------X-------X-------X-------X-------X-------X-------X-------X----X------------X--X-------X-------X-------X------X-----X---X

 1007  138  0   1.031     0.0     0.0     0.0     0.0     0.0     0.0
```

```
 JLacerdA-138   -75.5     0.0     0.0     0.0     0.0     0.0     0.0
                                                20.2%                 907 JLACA1E2-1GR  1   -22.5     8.8    23.4 1.048F        19
                                                44.2%                1006 JLacerdA-230  1   -23.9   -26.8    34.9 1.054*
                                                44.2%                1006 JLacerdA-230  2   -23.9   -26.9    34.9 1.054*
                                                66.4%                1008 JLacerdaA-69  1    12.3    11.9    16.6 0.965*
                                                64.7%                1008 JLacerdaA-69  2    24.4    22.8    32.4 0.965*
                                                11.8%                1035 PalhocaE-138  1    20.1    -1.9    19.6
                                                24.4%                2771 Imbituba-138  1    40.6    -9.9    40.6               25
                                                11.1%                2820 OrleansF-138  1   -10.8     9.8    14.1               25
                                                16.9%                2859 SJoaquim-138  1   -16.3    12.2    19.7               25
 1008   69  0   1.031     0.0     0.0     0.0     0.0     0.0     0.0
 JLacerdaA-69   -77.5     0.0     0.0     0.0     0.0     0.0     0.0
                                                71.5%                1006 JLacerdA-230  1   -59.0    16.2    59.4
                                                64.0%                1007 JLacerdA-138  1   -12.2   -11.1    16.0
                                                62.4%                1007 JLacerdA-138  2   -24.3   -21.1    31.2
                                                45.4%                2742 GravatalY-69  1    36.6     7.4    36.3               25
                                                52.4%                2875 Tubarao---69  1    33.1     7.8    33.0               25
                                                61.0%                2875 Tubarao---69  2    25.7     0.7    25.0               25
 1010  230  0   1.013     0.0     0.0     0.0     0.0     0.0     0.0
 JLacerdB-230   -73.9     0.0     0.0     0.0     0.0     0.0     0.0
                                                22.8%                 911 JLACB5E6-1GR  1   -71.9    -2.3    71.1 1.050F        19
                                                14.8%                 947 Biguacu--230  1    25.7   -21.2    32.9
                                                22.6%                1006 JLacerdA-230  1    78.8    37.8    86.4
                                                41.1%                1011 JLacerdC-230  1  -162.0    -8.7   160.2
                                                11.7%                1034 Palhoca--230  1    34.1   -19.7    38.9
                                                14.6%                1057 Sideropo-230  1    46.6     6.7    46.5
                                                15.2%                1057 Sideropo-230  2    48.7     7.4    48.6
 1011  230  0   1.013     0.0     0.0     0.0     0.0     0.0     0.0
 JLacerdC-230   -73.9     0.0     0.0     0.0     0.0     0.0     0.0
                                                41.0%                 913 JLACERC7-1GR  1   -80.8    -4.4    79.9 1.050F        19
                                                41.2%                 913 JLACERC7-1GR  2   -81.2    -4.4    80.3 1.050F        19
                                                41.1%                1010 JLacerdB-230  1   162.0     8.8   160.2
CEPEL - CENTRO DE PESQUISAS DE ENERGIA ELETRICA - PROGRAMA DE ANALISE DE REDES - V08MAR05A                                PAG. 260

ANUAL 06/07 * SETEMBRO 2006 PESADA S/SE 19H N/NE 19H * ANAT0 - FSE - C13
RELATORIO COMPLETO DO SISTEMA * AREA 20 * *            ELETROSUL             *

X------------------ D A D O S  -  B A R R A -------------------------X------------- F L U X O S  -  C I R C U I T O S -------------X
 DA BARRA       TENSAO GERACAO INJ EQV  CARGA   ELO CC  SHUNT    MOTOR
 NUM. KV TIPO    MOD/     MW/     MW/     MW/     MW/   Mvar/     MW/
     NOME        ANG     Mvar    Mvar    Mvar    Mvar   EQUIV    Mvar  PARA BARRA                    FLUXOS
                                                FLUXO % SHUNT L         NUM.     NOME     NC     MW    Mvar  MVA/V_d   TAP  DEFAS TIE
X------------X-------X-------X-------X-------X-------X-------X-------X----X------------X--X-------X-------X-------X------X-----X---X

 1015  230  0   1.010     0.0     0.0     0.0     0.0     0.0     0.0
 Joinvill-230   -74.3     0.0     0.0     0.0     0.0     0.0     0.0
                                                41.3%                 939 Blumenau-230  1  -132.7    10.4   131.8
                                                41.3%                 939 Blumenau-230  2  -132.6    10.5   131.7
                                                14.4%                 960 Curitiba-230  1   -32.7   -32.7    45.8
                                                14.5%                 960 Curitiba-230  2   -33.0   -33.0    46.2
                                                59.0%                1016 Joinvill-138  1    44.3     6.0    44.2
                                                64.0%                1016 Joinvill-138  2    96.2    12.3    96.1
                                                59.5%                1016 Joinvill-138  3    44.8     5.3    44.6
                                                59.4%                1016 Joinvill-138  4    44.6     6.0    44.5
                                                79.9%                1017 Joinville-69  1    77.8    21.4    79.9 0.963*
                                                 5.8%                2886 VegaSul--230  1    11.8    -3.2    12.1               25
                                                 5.8%                2886 VegaSul--230  2    11.8    -3.2    12.1               25
 1016  138  0   1.014     0.0     0.0     0.0     0.0     0.0     0.0
 Joinvill-138   -77.5     0.0     0.0     0.0     0.0     0.0     0.0
                                                58.2%                1015 Joinvill-230  1   -44.1    -3.5    43.6 1.013*
```

```
                                                 63.2%                 1015 Joinvill-230  2   -95.9    -6.9    94.8 1.013*
                                                 58.7%                 1015 Joinvill-230  3   -44.6    -2.8    44.1 1.013*
                                                 58.6%                 1015 Joinvill-230  4   -44.4    -3.5    43.9 1.013*
                                                 24.2%                 1017 Joinville-69  1    11.0    -5.5    12.1 0.994*
                                                 21.2%                 1017 Joinville-69  2     6.3    -3.2     7.0 0.994*
                                                 21.6%                 1017 Joinville-69  3     6.4    -3.3     7.1 0.994*
                                                 18.2%                 2726 Cebrac1Y-138  1   -16.4    -6.9    17.5                25
                                                 67.1%                 2789 Joinvil4-138  1    85.3    32.1    89.9                25
                                                 67.1%                 2789 Joinvil4-138  2    85.3    32.1    89.9                25
                                                 26.9%                 2799 JoinviSC-138  1    24.7    -8.6    25.8                25
                                                 15.4%                 2853 SBenNBra-138  1    13.3   -12.1    17.8                25
                                                 27.2%                 2867 Tigre----138  1    34.5    -6.1    34.5                25
                                                 16.7%                 2898 WegFundi-138  1   -21.5    -1.7    21.3                25
 1017   69  0   1.029     0.0     0.0     0.0     0.0     0.0     0.0
 Joinville-69   -78.5     0.0     0.0     0.0     0.0     0.0     0.0
                                                 76.9%                 1015 Joinvill-230  1   -77.6   -15.4    76.9
                                                 24.1%                 1016 Joinvill-138  1   -10.9     5.8    12.0
                                                 21.1%                 1016 Joinvill-138  2    -6.3     3.3     6.9
                                                 21.4%                 1016 Joinvill-138  3    -6.4     3.4     7.1
                                                 78.2%                 2786 Joinvill1-69  1    50.6     1.4    49.2                25
                                                 78.2%                 2786 Joinvill1-69  2    50.6     1.4    49.2                25
 1027  525  0   1.029     0.0     0.0     0.0     0.0     0.0     0.0
 Londrina-525   -63.0     0.0     0.0     0.0     0.0     0.0     0.0
                                                 32.4%                  556 ASSIS----525  1   653.0  -139.0   648.6                05
                                                 29.1%                  999 IvaiporE-525  1  -680.8    -9.7   661.5
                                                 26.1%                  999 IvaiporE-525  2  -682.7    -9.3   663.4
                                                 51.5%                 1028 LondrinE-230  1   348.2    74.8   346.0
                                                 53.7%                 1028 LondrinE-230  2   362.3    83.2   361.2
CEPEL - CENTRO DE PESQUISAS DE ENERGIA ELETRICA - PROGRAMA DE ANALISE DE REDES - V08MAR05A                                PAG. 261

ANUAL 06/07 * SETEMBRO 2006 PESADA S/SE 19H N/NE 19H * ANAT0 - FSE - C13
RELATORIO COMPLETO DO SISTEMA * AREA 20 * *            ELETROSUL             *

X----------------- D A D O S  -  B A R R A -------------------------X------------- F L U X O S  -  C I R C U I T O S -------------X
 DA BARRA      TENSAO GERACAO INJ EQV  CARGA   ELO CC  SHUNT    MOTOR
 NUM. KV TIPO   MOD/     MW/     MW/     MW/     MW/   Mvar/     MW/
     NOME       ANG     Mvar    Mvar    Mvar    Mvar   EQUIV    Mvar  PARA BARRA                    FLUXOS
                                                FLUXO % SHUNT L         NUM.     NOME     NC     MW    Mvar  MVA/V_d   TAP  DEFAS TIE
X------------X-------X-------X-------X-------X-------X-------X-------X----X------------X--X-------X-------X-------X------X-----X---X

 1028  230  0   1.040     0.0     0.0     0.0     0.0     0.0     0.0
 LondrinE-230   -65.4     0.0     0.0     0.0     0.0     0.0     0.0
                                                 15.3%                  553 ASSIS-MAR230  1    48.0   -15.4    48.5                05
                                                 56.5%                  878 Apucaran-230  1   204.0   104.6   220.5                21
                                                 41.9%                  886 Ibipora--230  1    98.5    -9.0    95.1                21
                                                 41.9%                  886 Ibipora--230  2    98.5    -9.0    95.1                21
                                                 50.5%                 1027 Londrina-525  1  -347.7   -59.5   339.3 1.020*
                                                 52.7%                 1027 Londrina-525  2  -362.1   -67.3   354.2 1.020*
                                                 54.7%                 1029 LondrinF-230  1   181.4     6.6   174.6
                                                 28.4%                 1031 MaringaF-230  1    79.4    49.0    89.7
 1029  230  0   1.031     0.0     0.0     0.0     0.0     0.0     0.0
 LondrinF-230   -67.8     0.0     0.0     0.0     0.0     0.0     0.0
                                                  8.8%                  551 ASSI-LON-230  1    33.7   -18.6    37.4                05
                                                 45.2%                  889 LondrinC-230  1   146.4    25.9   144.2                21
                                                 54.8%                 1028 LondrinE-230  1  -180.1    -7.3   174.9
 1030  525  0   1.026     0.0     0.0     0.0     0.0     0.0     0.0
 Machadin-525   -52.0     0.0     0.0     0.0     0.0     0.0     0.0
                                                 84.0%                  915 MACHADIN-3GR  1 -1025.4   339.1  1052.7 1.000F        19
                                                  0.0%                  916 MACHADIN-000  1     0.0     0.0     0.0 1.000F        19
                                                 24.9%                  955 CNovos---525  1   539.6  -141.8   543.8
```

```
                                                  25.8%                 955 CNovos---525  2   730.0  -163.9   729.3
                                                  11.0%                 995 Ita------525  1  -244.2   -33.4   240.3
 1031  230  0   0.977     0.0     0.0     0.0     0.0     0.0     0.0
 MaringaF-230   -69.0     0.0     0.0     0.0     0.0     0.0     0.0
                                                   1.9%                 868 Maringa--230  1   176.7    50.7   188.2                21
                                                  32.1%                 954 CMourao--230  1   -98.9     6.5   101.5
                                                  31.3%                1028 LondrinE-230  1   -77.8   -57.2    98.9
 1032  230  0   1.027     0.0     0.0     0.0     0.0     0.0     0.0
 PalhocaT-230   -76.7     0.0     0.0     0.0     0.0     0.0     0.0
                                                  18.6%                 942 EnseadaT-230  1    49.0   -45.3    65.0
                                                  18.6%                 947 Biguacu--230  1   -49.0    45.3    65.0
 1034  230  0   1.017     0.0     0.0     0.0     0.0     0.0     0.0
 Palhoca--230   -76.3     0.0     0.0     0.0     0.0     0.0     0.0
                                                  42.9%                 939 Blumenau-230  1   -91.9     9.3    90.9
                                                   7.3%                 947 Biguacu--230  1   -23.7   -10.3    25.4
                                                  10.0%                1010 JLacerdB-230  1   -33.8     0.1    33.2
                                                  36.5%                1035 PalhocaE-138  1    31.2    -0.9    30.7
                                                  37.0%                1035 PalhocaE-138  2    28.2     0.2    27.8
                                                  38.5%                1035 PalhocaE-138  3    29.3     0.8    28.9
                                                  39.8%                1035 PalhocaE-138  4    60.6     0.7    59.6
CEPEL - CENTRO DE PESQUISAS DE ENERGIA ELETRICA - PROGRAMA DE ANALISE DE REDES - V08MAR05A                                PAG. 262

ANUAL 06/07 * SETEMBRO 2006 PESADA S/SE 19H N/NE 19H * ANAT0 - FSE - C13
RELATORIO COMPLETO DO SISTEMA * AREA 20 * *            ELETROSUL             *

X----------------- D A D O S  -  B A R R A -------------------------X------------ F L U X O S  -  C I R C U I T O S ------------X
 DA BARRA      TENSAO GERACAO INJ EQV  CARGA   ELO CC  SHUNT    MOTOR
 NUM. KV TIPO   MOD/     MW/     MW/     MW/     MW/   Mvar/     MW/
     NOME       ANG     Mvar    Mvar    Mvar    Mvar   EQUIV    Mvar  PARA BARRA                    FLUXOS
                                                FLUXO % SHUNT L         NUM.     NOME     NC     MW    Mvar  MVA/V_d   TAP  DEFAS TIE
X------------X-------X-------X-------X-------X-------X-------X-------X----X------------X--X-------X-------X-------X------X-----X---X

 1035  138  0   1.014     0.0     0.0     0.0     0.0     0.0     0.0
 PalhocaE-138   -78.4     0.0     0.0     0.0     0.0     0.0     0.0
                                                  12.0%                 967 Floriano-138  1    19.7    -4.6    20.0
                                                  14.0%                 967 Floriano-138  2    19.7    -4.6    20.0
                                                  12.1%                1007 JLacerdA-138  1   -19.9    -4.6    20.1
                                                  36.5%                1034 Palhoca--230  1   -31.0     2.0    30.7 1.000*
                                                  37.0%                1034 Palhoca--230  2   -28.1     0.8    27.8 1.000*
                                                  38.5%                1034 Palhoca--230  3   -29.3     0.2    28.9 1.000*
                                                  39.8%                1034 Palhoca--230  4   -60.5     1.4    59.6 1.000*
                                                  35.8%                2769 IlhaCent-138  1    51.3     7.5    51.1                25
                                                   7.7%                2771 Imbituba-138  1    -4.8   -10.1    11.0                25
                                                  55.8%                2826 Palhoca--138  1    40.2     6.6    40.1                25
                                                  29.6%                2872 Trindade-138  1    42.6     5.4    42.3                25
 1041  230  0   1.030     0.0     0.0     0.7     0.0     0.0     0.0
 PFundo---230   -56.7     0.0     0.0     0.0     0.0     0.0     0.0
                                                  68.1%                 917 PFUNDO---2GR  1  -202.6    25.0   198.1 1.025F        19
                                                   0.0%                 918 PFUNDO---000  1     0.0     0.0     0.0 1.025F        19
                                                  12.8%                 963 MClaro---230  1    33.9   -27.6    42.5
                                                  40.0%                1042 PFundo---138  1    34.6     0.2    33.6
                                                  40.0%                1042 PFundo---138  2    34.6     0.2    33.6
                                                   7.7%                1069 Xanxere--230  1    24.3     7.5    24.7
                                                   7.8%                1069 Xanxere--230  2    24.3     7.6    24.7
                                                  12.0%                1213 Guarita--230  1    22.1    -0.2    21.4                23
                                                  23.4%                1228 NPrata2--230  1    63.8   -26.5    67.1                23
                                                  17.8%                1281 StaMarta-230  1   -35.8    13.9    37.3                23
 1042  138  0   1.030     0.0     0.0     0.0     0.0     0.0     0.0
 PFundo---138   -57.4     0.0     0.0     0.0     0.0     0.0     0.0
                                                  39.9%                1041 PFundo---230  1   -34.6     0.3    33.5 1.002*
```

```
                                                 39.9%                 1041 PFundo---230  2   -34.6     0.3    33.5 1.002*
                                                 67.5%                 2069 Erechim1-138  1    57.0    -1.5    55.3                32
                                                 98.1%                 2095 PFundo----23  1    12.1     0.9    11.8 1.039*        32
 1043  230  0   1.022     0.0     0.0     0.0     0.0     0.0     0.0
 RiveraCF-230   -52.0     0.0     0.0     0.0     0.0     0.0     0.0
                                                  0.0%                 1044 Rivera-CF-13  1     0.0     0.0     0.0 1.021*
                                                  0.0%                 1230 Livramen-230  1     0.0     0.0     0.0                23
 1044    1  0   1.000     0.0     0.0     0.0     0.0     0.0     0.0
 Rivera-CF-13   -52.0     0.0     0.0     0.0     0.0     0.0     0.0
                                                  0.0%                 1043 RiveraCF-230  1     0.0     0.0     0.0
CEPEL - CENTRO DE PESQUISAS DE ENERGIA ELETRICA - PROGRAMA DE ANALISE DE REDES - V08MAR05A                                PAG. 263

ANUAL 06/07 * SETEMBRO 2006 PESADA S/SE 19H N/NE 19H * ANAT0 - FSE - C13
RELATORIO COMPLETO DO SISTEMA * AREA 20 * *            ELETROSUL            *

X----------------- D A D O S  -  B A R R A -------------------------X------------ F L U X O S  -  C I R C U I T O S ------------X
 DA BARRA      TENSAO GERACAO INJ EQV  CARGA   ELO CC  SHUNT    MOTOR
 NUM. KV TIPO   MOD/     MW/     MW/     MW/     MW/   Mvar/     MW/
     NOME       ANG     Mvar    Mvar    Mvar    Mvar   EQUIV    Mvar  PARA BARRA                    FLUXOS
                                                FLUXO % SHUNT L        NUM.     NOME     NC     MW    Mvar  MVA/V_d   TAP  DEFAS TIE
X------------X-------X-------X-------X-------X-------X-------X-------X----X------------X--X-------X-------X-------X------X-----X---X

 1045  525  0   1.013     0.0     0.0     4.4     0.0  -154.0     0.0
 SAngelo--525   -51.8     0.0     0.0     0.0     0.0     0.0     0.0
                                                  3.7%                  972 Garabi-1-525  1     0.2    45.6    45.0                33
                                                 16.1%                  995 Ita------525  1   -71.6  -186.8   197.4
                                                  5.2%                 1046 SAngelo--230  1    34.6    -6.6    34.8
                                                  4.8%                 1046 SAngelo--230  2    32.4    -6.3    32.6
 1046  230  0   1.040     0.0     0.0     0.0     0.0     0.0     0.0
 SAngelo--230   -52.0     0.0     0.0     0.0     0.0     0.0     0.0
                                                  5.0%                 1045 SAngelo--525  1   -34.6     6.7    33.9 1.026*
                                                  4.7%                 1045 SAngelo--525  2   -32.4     6.4    31.7 1.026*
                                                 23.4%                 1225 Macambar-230  1   -89.9     3.5    86.5                23
                                                 14.3%                 1250 SAngelo2-230  1    47.4   -16.0    48.0                23
                                                 23.8%                 1283 StaRosa--230  1    81.4    -1.8    78.3                23
                                                 21.9%                 1283 StaRosa--230  2    81.4    -1.8    78.3                23
                                                 21.5%                 2078 Missoes--230  1   -53.3     3.0    51.3                23
 1047  230  0   1.051     0.0     0.0     1.3     0.0     0.0     0.0
 SOsorio--230   -49.4     0.0     0.0     0.0     0.0     0.0     0.0
                                                 47.0%                  839 Cascavel-230  1    93.3     2.7    88.9                21
                                                 37.8%                  852 PBranco--230  1   125.7    14.5   120.5                21
                                                 56.0%                  898 FChopim--230  1   190.5     6.2   181.5                21
                                                 78.9%                  919 SOSOR1A4-4GR  1  -652.8    13.3   621.5 1.025F         19
                                                  0.0%                  920 SOSOR1A4-000  1     0.0     0.0     0.0 1.025F         19
                                                 76.0%                  921 SOSOR5E6-2GR  1  -313.9     5.6   298.8 1.025F         19
                                                  0.0%                  922 SOSOR5E6-000  1     0.0     0.0     0.0 1.025F         19
                                                 23.0%                  934 Areia----230  1    75.0   -18.5    73.5
                                                 23.1%                  934 Areia----230  2    75.1   -18.4    73.6
                                                 41.7%                  954 CMourao--230  1   153.2    -2.2   145.8
                                                 41.8%                  954 CMourao--230  2   153.6     1.0   146.2
                                                  4.3%                 1048 SOsorio---69  1     1.5     0.0     1.4 1.050*
                                                 29.1%                 1069 Xanxere--230  1    97.5    -4.2    92.9
 1048   69  0   1.001     0.0     0.0     1.3     0.0     0.0     0.0
 SOsorio---69   -49.8     0.0     0.0     0.8     0.0     0.0     0.0
                                                  4.5%                 1047 SOsorio--230  1    -1.5     0.0     1.5
                                                  1.8%                 2455 SOsorio-Y-69  1     0.2    -0.8     0.8                22
 1057  230  0   1.003     0.0     0.0     0.0     0.0     0.0     0.0
 Sideropo-230   -75.2     0.0     0.0     0.0     0.0     0.0     0.0
                                                 15.1%                 1010 JLacerdB-230  1   -46.4   -14.1    48.3
                                                 15.8%                 1010 JLacerdB-230  2   -48.4   -14.4    50.4
```

```
                                                  74.0%                 1058 SideropoE-69  1    64.7     9.3    65.2 0.964*
                                                  45.9%                 1058 SideropoE-69  2    15.0     2.2    15.1 0.964*
                                                  72.2%                 1058 SideropoE-69  3    63.1     9.1    63.5 0.964*
                                                  69.1%                 1058 SideropoE-69  4    60.4     8.7    60.8 0.964*
                                                  32.4%                 1163 LageaGde-230  1  -108.4    -0.8   108.0              39
CEPEL - CENTRO DE PESQUISAS DE ENERGIA ELETRICA - PROGRAMA DE ANALISE DE REDES - V08MAR05A                                 PAG. 264

ANUAL 06/07 * SETEMBRO 2006 PESADA S/SE 19H N/NE 19H * ANAT0 - FSE - C13
RELATORIO COMPLETO DO SISTEMA * AREA 20 * *            ELETROSUL             *

X----------------- D A D O S  -  B A R R A -------------------------X------------ F L U X O S  -  C I R C U I T O S ------------X
 DA BARRA      TENSAO GERACAO INJ EQV  CARGA   ELO CC  SHUNT    MOTOR
 NUM. KV TIPO   MOD/     MW/     MW/     MW/     MW/   Mvar/     MW/
     NOME       ANG     Mvar    Mvar    Mvar    Mvar   EQUIV    Mvar  PARA BARRA                    FLUXOS
                                                FLUXO % SHUNT L         NUM.     NOME     NC     MW    Mvar  MVA/V_d   TAP  DEFAS TIE
X------------X-------X-------X-------X-------X-------X-------X-------X----X------------X--X-------X-------X-------X------X-----X---X

 1058   69  0   1.031     0.0     0.0     0.0     0.0     0.0     0.0
 SideropoE-69   -79.2     0.0     0.0     0.0     0.0     0.0     0.0
                                                  71.4%                 1057 Sideropo-230  1   -64.6    -4.7    62.8
                                                  44.3%                 1057 Sideropo-230  2   -15.0    -1.2    14.6
                                                  69.6%                 1057 Sideropo-230  3   -63.0    -4.6    61.2
                                                  66.6%                 1057 Sideropo-230  4   -60.3    -4.4    58.6
                                                  66.9%                 2737 Criciuma--69  1    49.6     1.9    48.2              25
                                                  58.0%                 2737 Criciuma--69  2    49.6     1.9    48.2              25
                                                  44.6%                 2738 CriciFlor-69  1    23.8     7.1    24.1              25
                                                  53.8%                 2747 Forquilhi-69  1    44.3     1.7    43.0              25
                                                  43.2%                 2857 Sideropol-69  1    35.6     2.3    34.6              25
 1060  525  0   1.025     0.0     0.0     4.7     0.0     0.0     0.0
 SSantiag-525   -49.7     0.0     0.0     0.0     0.0     0.0     0.0
                                                   7.1%                  856 SSegredo-525  1    52.3   149.7   154.7              21
                                                  18.3%                  897 SCaxias--525  1  -306.9     1.4   299.4              21
                                                  98.1%                  925 SSANTIAG-4GR  1 -1375.7   306.5  1375.0 1.024F       19
                                                   0.0%                  926 SSANTIAG-000  1     0.0     0.0     0.0 1.024F       19
                                                   8.0%                  995 Ita------525  1    90.3  -147.2   168.4
                                                  33.6%                  999 IvaiporE-525  1   767.6  -156.0   764.1
                                                  24.0%                  999 IvaiporE-525  2   767.8  -154.5   764.0
 1061   69  0   1.002     0.0     0.0     0.2     0.0     0.0     0.0
 SSantiago-69   -49.9     0.0     0.0     0.0     0.0     0.0     0.0
                                                   0.4%                 2455 SOsorio-Y-69  1    -0.2     0.0     0.2              22
 1067  230  0   1.027     0.0     0.0     0.0     0.0     0.0     0.0
 UruguaCF-230   -34.7     0.0     0.0     0.0     0.0     0.0     0.0
                                                  46.7%                 1068 UruguaiCF-13  1     0.0    25.9    25.2 0.992*
                                                  12.0%                 1296 Uruguai5-230  1     0.0   -25.9    25.2              23
 1068    1  0   1.000     0.0     0.0     0.0     0.0   -25.0     0.0
 UruguaiCF-13   -34.6     0.0     0.0     0.0     0.0     0.0     0.0
                                                  46.3%                 1067 UruguaCF-230  1     0.0   -25.0    25.0
 1069  230  0   1.016     0.0     0.0     0.0     0.0     0.0     0.0
 Xanxere--230   -57.6     0.0     0.0     0.0     0.0     0.0     0.0
                                                  19.0%                  852 PBranco--230  1   -61.6     4.0    60.7              21
                                                   9.9%                 1041 PFundo---230  1   -24.2   -21.0    31.5
                                                   9.9%                 1041 PFundo---230  2   -24.2   -21.0    31.5
                                                  29.5%                 1047 SOsorio--230  1   -94.8   -11.2    94.0
                                                  55.5%                 2896 Xanxere--138  1    45.9    11.6    46.6              25
                                                  55.8%                 2896 Xanxere--138  2    46.1    11.7    46.8              25
                                                  54.5%                 2896 Xanxere--138  3    45.1    11.5    45.8              25
                                                  60.2%                 2896 Xanxere--138  4    44.7    10.3    45.2              25
                                                  69.5%                 2897 Xanxere---69  1    22.9     4.0    22.9 0.990*       25
CEPEL - CENTRO DE PESQUISAS DE ENERGIA ELETRICA - PROGRAMA DE ANALISE DE REDES - V08MAR05A                                 PAG. 265
```

ANUAL 06/07 * SETEMBRO 2006 PESADA S/SE 19H N/NE 19H * ANAT0 - FSE - C13
RELATORIO COMPLETO DO SISTEMA * AREA 20 * * ELETROSUL *

| DA BARRA NUM. KV TIPO NOME | TENSAO MOD/ ANG | GERACAO MW/ Mvar | INJ EQV MW/ Mvar | CARGA MW/ Mvar | ELO CC MW/ Mvar FLUXO % | SHUNT Mvar/ EQUIV SHUNT L | MOTOR MW/ Mvar | PARA BARRA NUM. | NOME | NC | MW | FLUXOS Mvar | MVA/V_d | TAP | DEFAS | TIE |
|---|---|---|---|---|---|---|---|---|---|---|---|---|---|---|---|---|
| 1078 230 0 | 1.026 | 0.0 | 0.0 | 0.0 | 0.0 | 0.0 | 0.0 | | | | | | | | | |
| Anastaci-230 | -83.5 | 0.0 | 0.0 | 0.0 | 0.0 | 0.0 | 0.0 | | | | | | | | | |
| | | | | | 71.9% | | | 1079 | Anastaci-138 | 1 | 55.2 | 4.1 | 53.9 | | | |
| | | | | | 25.4% | | | 1086 | Dourados-230 | 1 | -55.2 | -4.1 | 53.9 | | | |
| 1079 138 0 | 1.030 | 0.0 | 0.0 | 0.0 | 0.0 | 0.0 | 0.0 | | | | | | | | | |
| Anastaci-138 | -87.4 | 0.0 | 0.0 | 0.0 | 0.0 | 0.0 | 0.0 | | | | | | | | | |
| | | | | | 71.0% | | | 1078 | Anastaci-230 | 1 | -54.8 | -0.4 | 53.2 | 1.012* | | |
| | | | | | 46.3% | | | 1131 | Aquidaua-138 | 1 | 54.8 | 0.4 | 53.2 | | | 26 |
| 1082 138 0 | 0.993 | 0.0 | 0.0 | 0.0 | 0.0 | 0.0 | 0.0 | | | | | | | | | |
| CGrande--138 | -84.7 | 0.0 | 0.0 | 0.0 | 0.0 | 0.0 | 0.0 | | | | | | | | | |
| | | | | | 35.8% | | | 1134 | CGMCouto-138 | 1 | 42.7 | -5.5 | 43.3 | | | 26 |
| | | | | | 35.8% | | | 1134 | CGMCouto-138 | 2 | 42.7 | -5.5 | 43.3 | | | 26 |
| | | | | | 52.4% | | | 1136 | CGCuiaba-138 | 1 | 49.9 | 2.5 | 50.3 | | | 26 |
| | | | | | 16.1% | | | 1138 | Sidrolan-138 | 1 | 10.9 | -10.9 | 15.5 | | | 26 |
| | | | | | 39.6% | | | 1144 | Mimoso---138 | 1 | -43.5 | 7.5 | 44.4 | | | 26 |
| | | | | | 36.0% | | | 1144 | Mimoso---138 | 2 | -43.7 | 7.6 | 44.6 | | | 26 |
| | | | | | 38.4% | | | 1144 | Mimoso---138 | 3 | -46.3 | 9.6 | 47.6 | | | 26 |
| | | | | | 38.4% | | | 1144 | Mimoso---138 | 4 | -46.3 | 9.6 | 47.6 | | | 26 |
| | | | | | 33.5% | | | 1148 | SGabriel-138 | 1 | 28.6 | -14.1 | 32.2 | | | 26 |
| | | | | | 42.2% | | | 1149 | AguasCGr-138 | 1 | 4.9 | -0.9 | 5.1 | | | 26 |
| 1086 230 0 | 1.013 | 0.0 | 0.0 | 0.5 | 0.0 | 0.0 | 0.0 | | | | | | | | | |
| Dourados-230 | -78.0 | 0.0 | 0.0 | 0.0 | 0.0 | 0.0 | 0.0 | | | | | 0.0 | SHL | | | |
| | | | | | 57.7% | 0.0 | | 978 | Guaira-F-230 | 1 | -150.8 | 14.8 | 149.5 | | | |
| | | | | | 30.2% | | | 1078 | Anastaci-230 | 1 | 55.9 | -33.0 | 64.0 | | | |
| | | | | | 65.9% | | | 1142 | DouSCruz-138 | 1 | 49.1 | 10.0 | 49.4 | | | 26 |
| | | | | | 60.6% | | | 1142 | DouSCruz-138 | 2 | 45.3 | 8.2 | 45.5 | | | 26 |
| 1091 138 0 | 1.020 | 0.0 | 0.0 | 0.0 | 0.0 | 0.0 | 0.0 | | | | | | | | | |
| EldoradF-138 | -64.2 | 0.0 | 0.0 | 0.0 | 0.0 | 0.0 | 0.0 | | | | | | | | | |
| | | | | SUP | 146.1% | | | 847 | Guaira---138 | 1 | -34.2 | 1.6 | 33.6 | | | 22 |
| | | | | | 35.0% | | | 1141 | Eldorado-138 | 1 | 34.2 | -1.6 | 33.6 | | | 26 |
| 1192 230 0 | 1.028 | 0.0 | 0.0 | 0.0 | 0.0 | 0.0 | 0.0 | | | | | | | | | |
| Caxias5--230 | -64.8 | 0.0 | 0.0 | 0.0 | 0.0 | 0.0 | 0.0 | | | | | | | | | |
| | | | | | 53.9% | | | 962 | Farroupi-230 | 1 | -184.3 | -4.6 | 179.5 | | | |
| | | | | | 24.7% | | | 1163 | LageaGde-230 | 1 | 83.0 | -16.3 | 82.3 | | | 39 |
| | | | | | 34.9% | | | 1193 | Caxias5---69 | 1 | 55.8 | 19.7 | 57.6 | 0.987* | | 32 |
| | | | | | 44.4% | | | 9279 | Caxias5-A-13 | 1 | 22.8 | 0.6 | 22.2 | 1.027* | | 32 |
| | | | | | 44.4% | | | 9282 | Caxias5-B-13 | 1 | 22.8 | 0.6 | 22.2 | 1.027* | | 32 |



ANUAL 06/07 * SETEMBRO 2006 PESADA S/SE 19H N/NE 19H * ANAT0 - FSE - C13

TOTAIS DA AREA 20

| GERACAO MW/ Mvar | INJ EQV MW/ Mvar | CARGA MW/ Mvar | ELO CC MW/ Mvar | SHUNT Mvar/ EQUIV | EXPORT MW/ Mvar | IMPORT MW/ Mvar | PERDAS MW/ Mvar |
|---|---|---|---|---|---|---|---|

```
X--------X--------X--------X--------X--------X--------X--------X--------X

     0.0      0.0     46.5      0.0   -642.2  11438.6  11739.3    254.2
    24.8      0.0      1.2      0.0      0.0   3562.9    690.6  -3490.9
CEPEL - CENTRO DE PESQUISAS DE ENERGIA ELETRICA - PROGRAMA DE ANALISE DE REDES - V08MAR05A                                PAG. 267

ANUAL 06/07 * SETEMBRO 2006 PESADA S/SE 19H N/NE 19H * ANAT0 - FSE - C13
RELATORIO COMPLETO DO SISTEMA * AREA 21 * *              COPEL               *

X----------------- D A D O S  -  B A R R A ------------------------X------------ F L U X O S  -  C I R C U I T O S ------------X
 DA BARRA      TENSAO GERACAO INJ EQV  CARGA   ELO CC  SHUNT    MOTOR
 NUM. KV TIPO   MOD/     MW/     MW/     MW/     MW/   Mvar/     MW/
     NOME       ANG     Mvar    Mvar    Mvar    Mvar   EQUIV    Mvar  PARA BARRA                    FLUXOS
                                                FLUXO % SHUNT L         NUM.     NOME     NC     MW    Mvar  MVA/V_d   TAP  DEFAS TIE
X------------X-------X-------X-------X-------X-------X-------X-------X----X------------X--X-------X-------X-------X------X-----X---X

  813  230  0   1.037     0.0     0.0     0.0     0.0     0.0     0.0
 GralhAzu-230   -73.2     0.0     0.0     0.0     0.0     0.0     0.0
                                                 0.0%                  802 ARAUCARG-000  1     0.0     0.0     0.0 1.000F        39
                                                 0.0%                  803 ARAUCARV-000  1     0.0     0.0     0.0 1.000F        39
                                                34.2%                  815 CIndustr-230  1   153.7    41.2   153.4
                                                38.3%                  822 Umbara-1-230  1  -171.7   -47.9   171.9
                                                 4.8%                 2496 Cisa-----230  1    18.0     6.7    18.5               68
  814  230  0   1.040     0.0     0.0     0.0     0.0     0.0     0.0
 Bateias--230   -73.1     0.0     0.0     0.0     0.0     0.0     0.0
                                                25.2%                  816 CComprid-230  1    80.6    29.8    82.6
                                                25.2%                  816 CComprid-230  2    80.6    29.8    82.6
                                                23.8%                  816 CComprid-230  3    76.3    25.6    77.4
                                                26.2%                  827 Jaguaria-230  1    90.5    12.9    87.9
                                                45.6%                  831 PGrossaS-230  1    24.2    79.4    79.8
                                                40.0%                  895 Bateias--525  1  -226.6  -104.1   239.8 1.066*
                                                40.0%                  895 Bateias--525  2  -226.6  -104.1   239.8 1.066*
                                                33.9%                 2359 Bateias--138  1    50.5    15.4    50.8 1.030*        22
                                                33.9%                 2359 Bateias--138  2    50.5    15.4    50.8 1.030*        22
  815  230  0   1.030     0.0     0.0     0.0     0.0     0.0     0.0
 CIndustr-230   -74.1     0.0     0.0     0.0     0.0     0.0     0.0
                                                34.3%                  813 GralhAzu-230  1  -153.2   -40.9   154.0
                                                13.5%                  816 CComprid-230  1   -50.2   -18.7    52.1
                                                56.7%                 2368 CIndustri-69  1    84.2    24.0    85.0 0.999*        22
                                                57.5%                 2368 CIndustri-69  2    85.4    24.3    86.2 0.999*        22
                                                34.6%                 9342 Cindustri-13  1    16.9     5.6    17.3 1.010*        22
                                                34.8%                 9342 Cindustri-13  2    17.0     5.7    17.4 1.010*        22
  816  230  0   1.033     0.0     0.0     0.0     0.0     0.0     0.0
 CComprid-230   -73.7     0.0     0.0     0.0     0.0     0.0     0.0
                                                25.5%                  814 Bateias--230  1   -80.4   -32.1    83.8
                                                25.6%                  814 Bateias--230  2   -80.4   -32.1    83.8
                                                24.1%                  814 Bateias--230  3   -76.1   -27.8    78.4
                                                13.3%                  815 CIndustr-230  1    50.3    16.4    51.2
                                                54.1%                  819 Pilarzin-230  1   206.5    79.3   214.2
                                                24.5%                  821 Umbara-2-230  1   -68.0   -15.6    67.5
                                                26.9%                  822 Umbara-1-230  1   -96.9   -23.6    96.6
                                                47.1%                 2363 CComprido-69  1    57.1    12.3    56.6 1.000F        22
                                                46.4%                 2363 CComprido-69  2    56.2    12.1    55.7 1.000F        22
                                                32.5%                 9321 CComprido-13  1    15.9     5.5    16.3 1.013*        22
                                                32.4%                 9321 CComprido-13  2    15.8     5.5    16.2 1.013*        22
CEPEL - CENTRO DE PESQUISAS DE ENERGIA ELETRICA - PROGRAMA DE ANALISE DE REDES - V08MAR05A                                PAG. 268

ANUAL 06/07 * SETEMBRO 2006 PESADA S/SE 19H N/NE 19H * ANAT0 - FSE - C13
RELATORIO COMPLETO DO SISTEMA * AREA 21 * *              COPEL               *
```

```
X----------------- D A D O S  -  B A R R A -------------------------X------------ F L U X O S  -  C I R C U I T O S ------------X
 DA BARRA      TENSAO GERACAO INJ EQV  CARGA   ELO CC  SHUNT    MOTOR
 NUM. KV TIPO   MOD/     MW/     MW/     MW/     MW/   Mvar/     MW/
     NOME       ANG     Mvar    Mvar    Mvar    Mvar   EQUIV    Mvar  PARA BARRA                    FLUXOS
                                                FLUXO % SHUNT L        NUM.     NOME     NC     MW    Mvar  MVA/V_d   TAP  DEFAS TIE
X------------X-------X-------X-------X-------X-------X-------X-------X----X------------X--X-------X-------X-------X------X-----X---X

  817  230  0   1.026     0.0     0.0     0.0     0.0    14.2     0.0
 GPSouza--230   -73.3     0.0     0.0     0.0     0.0     0.0     0.0
                                               90.4%                   804 GPSOUZA--4GR  1  -232.8   -20.6   227.9 1.043F        38
                                                0.0%                   805 GPSOUZA--000  1     0.0     0.0     0.0 1.043F        38
                                               23.3%                  2373 GPSouza--138  1    32.7    14.8    35.0 0.988*        22
                                               23.3%                  2373 GPSouza--138  2    32.7    14.8    35.0 0.988*        22
                                               26.7%                  2459 PFiscal--230  1    40.5   -19.3    43.8               22
                                               51.1%                  2477 StaMonica230  1    94.0    18.6    93.5
                                               21.8%                  9337 GPSouza--FIC  1    32.9     6.0    32.6 0.993*        22
  818  230  0   1.017     0.0     0.0     0.0     0.0     0.0     0.0
 DISJoseP-230   -74.8     0.0     0.0     0.0     0.0     0.0     0.0
                                               20.4%                   820 Uberaba--230  1    55.3    27.6    60.8
                                               25.6%                  2353 CAssobio-230  1   -72.1   -28.8    76.4
                                               16.6%                  9322 DISJosePi-13  1     8.4     0.6     8.3 1.015*        22
                                               16.6%                  9322 DISJosePi-13  2     8.4     0.6     8.3 1.015*        22
  819  230  0   1.013     0.0     0.0     0.0     0.0     0.0     0.0
 Pilarzin-230   -75.5     0.0     0.0     0.0     0.0     0.0     0.0
                                               54.4%                   816 CComprid-230  1  -204.9   -74.6   215.3
                                               26.3%                  2377 RBS011CCP230  1    27.1     4.2    27.1               22
                                               49.2%                  2387 Pilarzinh-69  1    70.7    24.5    73.9 0.978*        22
                                               48.7%                  2387 Pilarzinh-69  2    70.0    24.2    73.1 0.978*        22
                                               23.2%                  2477 StaMonica230  1    37.0    21.7    42.4
  820  230  0   1.012     0.0     0.0     0.0     0.0     0.0     0.0
 Uberaba--230   -75.1     0.0     0.0     0.0     0.0     0.0     0.0
                                               20.7%                   818 DISJoseP-230  1   -55.2   -29.4    61.8
                                               47.6%                   822 Umbara-1-230  1  -132.5   -55.3   141.9
                                               74.7%                  2401 Uberaba---69  1    97.9    57.1   112.0 0.944*        22
                                               75.8%                  2401 Uberaba---69  2    99.5    58.0   113.8 0.944*        22
                                               19.4%                  2459 PFiscal--230  1    -9.7   -30.4    31.5               22
  821  230  0   1.040     0.0     0.0     0.0     0.0     0.0     0.0
 Umbara-2-230   -72.8     0.0     0.0     0.0     0.0     0.0     0.0
                                               24.1%                   816 CComprid-230  1    68.2    11.9    66.6
                                               30.9%                   822 Umbara-1-230  1   144.8    50.8   147.6
                                               48.3%                   960 Curitiba-230  1  -331.9   -89.8   330.7               20
                                               28.7%                  2399 ARC043SIG230  1    34.8     7.2    34.2               22
                                               55.4%                  2402 Umbara-A--69  1    84.2    19.9    83.2 1.015*        22
CEPEL - CENTRO DE PESQUISAS DE ENERGIA ELETRICA - PROGRAMA DE ANALISE DE REDES - V08MAR05A                                PAG. 269

ANUAL 06/07 * SETEMBRO 2006 PESADA S/SE 19H N/NE 19H * ANAT0 - FSE - C13
RELATORIO COMPLETO DO SISTEMA * AREA 21 * *              COPEL              *

X----------------- D A D O S  -  B A R R A -------------------------X------------ F L U X O S  -  C I R C U I T O S ------------X
 DA BARRA      TENSAO GERACAO INJ EQV  CARGA   ELO CC  SHUNT    MOTOR
 NUM. KV TIPO   MOD/     MW/     MW/     MW/     MW/   Mvar/     MW/
     NOME       ANG     Mvar    Mvar    Mvar    Mvar   EQUIV    Mvar  PARA BARRA                    FLUXOS
                                                FLUXO % SHUNT L        NUM.     NOME     NC     MW    Mvar  MVA/V_d   TAP  DEFAS TIE
X------------X-------X-------X-------X-------X-------X-------X-------X----X------------X--X-------X-------X-------X------X-----X---X

  822  230  0   1.040     0.0     0.0     0.0     0.0     0.0     0.0
 Umbara-1-230   -72.8     0.0     0.0     0.0     0.0     0.0     0.0
                                               38.2%                   813 GralhAzu-230  1   171.9    48.2   171.7
                                               26.7%                   816 CComprid-230  1    97.2    21.4    95.8
                                               46.7%                   820 Uberaba--230  1   133.9    55.1   139.3
```

```
                                                 30.9%                 821 Umbara-2-230  1  -144.8   -50.8   147.6
                                                 69.8%                 960 Curitiba-230  1  -476.7  -140.5   478.0                20
                                                 46.6%                2353 CAssobio-230  1   133.6    54.3   138.7
                                                 55.0%                2406 Umbara-B--69  1    84.8    12.3    82.4 1.029*         22
  824  525  0   1.014     0.0     0.0     0.0     0.0     0.0     0.0
 GBMunhoz-525   -53.6     0.0     0.0     0.0     0.0     0.0     0.0
                                                 90.6%                 800 GBMUNHOZ-4GR  1 -1523.8   221.3  1518.6 1.024F         38
                                                  0.0%                 801 GBMUNHOZ-000  1     0.0     0.0     0.0 1.024F         38
                                                 35.1%                 933 Areia----525  1   767.9  -111.9   765.3                20
                                                 34.5%                 933 Areia----525  2   755.9  -109.4   753.3                20
  827  230  0   0.995     0.0     0.0     0.0     0.0     0.0     0.0
 Jaguaria-230   -79.1     0.0     0.0     0.0     0.0     0.0     0.0
                                                 27.9%                 814 Bateias--230  1   -88.8   -28.2    93.6
                                                 20.4%                 884 Figueira-230  1   -57.7    -6.5    58.3
                                                 50.3%                2423 Jaguaria-138  1    73.1    17.3    75.4 0.986*         22
                                                 50.5%                2423 Jaguaria-138  2    73.4    17.4    75.8 0.986*         22
  829  230  0   0.960     0.0     0.0     0.0     0.0     0.0     0.0
 PGrossaN-230   -72.7     0.0     0.0     0.0     0.0     0.0     0.0
                                                 48.0%                 830 PGrossaN-138  1    13.7    31.7    36.0 0.924*         22
                                                 47.2%                 830 PGrossaN-138  2    13.5    31.2    35.4 0.924*         22
                                                 38.8%                 831 PGrossaS-230  1    45.6   -46.7    68.0
                                                 38.6%                 884 Figueira-230  1    39.4   -44.4    61.8
                                                 52.3%                 934 Areia----230  1  -159.7    -1.4   166.3                20
                                                 59.1%                9327 PGrossaN-FIC  1    36.0    22.7    44.3 0.953*         22
                                                 18.6%                9328 PGrossaNo-34  1    11.5     6.9    14.0 0.953*         22
  831  230  0   0.968     0.0     0.0     0.0     0.0     0.0     0.0
 PGrossaS-230   -73.4     0.0     0.0     0.0     0.0     0.0     0.0
                                                 53.4%                 814 Bateias--230  1   -23.0   -87.6    93.5
                                                 37.3%                 829 PGrossaN-230  1   -45.4    44.1    65.4
                                                 21.9%                2437 PGrossaS-138  1    12.3    10.1    16.4 0.952*         22
                                                 25.8%                2437 PGrossaS-138  2     9.7     7.9    12.9 0.952*         22
                                                 54.3%                9324 PGrossaS-FIC  1    23.0    12.7    27.2 0.891*         22
                                                 55.1%                9325 PGrossaSu-34  1    23.4    12.9    27.5 0.891*         22
CEPEL - CENTRO DE PESQUISAS DE ENERGIA ELETRICA - PROGRAMA DE ANALISE DE REDES - V08MAR05A                                PAG. 270

ANUAL 06/07 * SETEMBRO 2006 PESADA S/SE 19H N/NE 19H * ANAT0 - FSE - C13
RELATORIO COMPLETO DO SISTEMA * AREA 21 * *              COPEL              *

X----------------- D A D O S  -  B A R R A -------------------------X------------ F L U X O S  -  C I R C U I T O S ------------X
 DA BARRA       TENSAO GERACAO INJ EQV  CARGA   ELO CC  SHUNT    MOTOR
 NUM. KV TIPO   MOD/     MW/     MW/     MW/     MW/   Mvar/    MW/
     NOME       ANG     Mvar    Mvar    Mvar    Mvar   EQUIV    Mvar  PARA BARRA                    FLUXOS
                                                FLUXO % SHUNT L         NUM.     NOME     NC     MW    Mvar  MVA/V_d   TAP  DEFAS TIE
X------------X-------X-------X-------X-------X-------X-------X-------X----X------------X--X-------X-------X-------X------X-----X---X

  834  230  0   1.025     0.0     0.0     0.0     0.0     0.0     0.0
 SMateus--230   -69.3     0.0     0.0     0.0     0.0     0.0     0.0
                                                 52.6%                 934 Areia----230  1  -190.0    37.1   188.8                20
                                                 35.0%                 943 Canoinha-230  1   110.5   -14.6   108.7                20
                                                 18.6%                 960 Curitiba-230  1    52.1   -31.7    59.4                20
                                                 13.8%                2424 SMS211XIS230  1    14.0     4.0    14.2                22
                                                 30.0%                9330 SaoMateus-34  1     9.0     3.2     9.3 1.010*         22
                                                 15.2%                9331 SaoMateus-13  1     4.4     2.0     4.7 1.006*         22
  839  230  0   1.034     0.0     0.0     0.0     0.0     0.0     0.0
 Cascavel-230   -53.1     0.0     0.0     0.0     0.0     0.0     0.0
                                                 77.7%                 840 Cascavel-138  1   114.7    37.2   116.5 0.984*         22
                                                 82.0%                 840 Cascavel-138  2   121.0    39.3   123.0 0.984*         22
                                                 77.0%                 840 Cascavel-138  3   113.6    36.9   115.5 0.984*         22
                                                 39.9%                 898 FChopim--230  1   -77.2   -11.6    75.4
                                                 47.6%                1047 SOsorio--230  1   -92.3   -11.6    90.0                20
```

```
                                                 26.9%                 2458 CascavOe-230  1   -87.9   -42.0    94.2
                                                 28.2%                 2458 CascavOe-230  2   -92.0   -48.1   100.3
 846  230  0   1.023     0.0     0.0     0.0     0.0     0.0     0.0
Guaira---230   -61.4     0.0     0.0     0.0     0.0     0.0     0.0
                                                 39.6%                  847 Guaira---138  1    55.5    24.7    59.4 0.987*        22
                                                  0.6%                  978 Guaira-F-230  1   -55.5   -24.7    59.4               20
 852  230  0   1.018     0.0     0.0     0.0     0.0     0.0     0.0
PBranco--230   -54.8     0.0     0.0     0.0     0.0     0.0     0.0
                                                 50.7%                  853 PBranco--138  1    30.4    16.4    34.0 0.986*        22
                                                 51.2%                  853 PBranco--138  2    30.7    16.6    34.3 0.986*        22
                                                 38.4%                 1047 SOsorio--230  1  -123.3   -17.8   122.4               20
                                                 19.7%                 1069 Xanxere--230  1    62.1   -15.1    62.8               20
 856  525  0   1.012     0.0     0.0     0.0     0.0     0.0     0.0
SSegredo-525   -49.8     0.0     0.0     0.0     0.0     0.0     0.0
                                                 93.5%                  810 GNBRAGA--4GR  1 -1131.6   372.1  1177.6 1.000F        38
                                                  0.0%                  811 GNBRAGA--000  1     0.0     0.0     0.0 1.000F        38
                                                 51.8%                  933 Areia----525  1  1183.6  -136.1  1177.8               20
                                                 10.9%                 1060 SSantiag-525  1   -52.0  -236.0   238.9               20
 868  230  0   0.977     0.0     0.0     0.0     0.0     0.0     0.0
Maringa--230   -69.0     0.0     0.0     0.0     0.0     0.0     0.0
                                                 61.1%                  869 Maringa--138  1    73.8    50.5    91.6 0.941*        22
                                                 59.8%                  869 Maringa--138  2    72.3    49.5    89.7 0.941*        22
                                                 32.7%                  872 Sarandi--230  1    30.6   -49.4    59.5
                                                  1.9%                 1031 MaringaF-230  1  -176.7   -50.6   188.2               20
CEPEL - CENTRO DE PESQUISAS DE ENERGIA ELETRICA - PROGRAMA DE ANALISE DE REDES - V08MAR05A                                 PAG. 271

ANUAL 06/07 * SETEMBRO 2006 PESADA S/SE 19H N/NE 19H * ANAT0 - FSE - C13
RELATORIO COMPLETO DO SISTEMA * AREA 21 * *              COPEL                *

X----------------- D A D O S  -  B A R R A -------------------------X------------ F L U X O S  -  C I R C U I T O S ------------X
 DA BARRA      TENSAO GERACAO INJ EQV  CARGA   ELO CC  SHUNT    MOTOR
 NUM. KV TIPO   MOD/     MW/     MW/     MW/     MW/   Mvar/     MW/
     NOME       ANG     Mvar    Mvar    Mvar    Mvar   EQUIV    Mvar  PARA BARRA                    FLUXOS
                                                FLUXO % SHUNT L        NUM.     NOME     NC     MW    Mvar  MVA/V_d   TAP  DEFAS TIE
X------------X-------X-------X-------X-------X-------X-------X-------X----X------------X--X-------X-------X-------X------X-----X---X

 872  230  0   0.984     0.0     0.0     0.0     0.0     0.0     0.0
Sarandi--230   -69.4     0.0     0.0     0.0     0.0     0.0     0.0
                                                 31.2%                  868 Maringa--230  1   -30.4    46.9    56.8
                                                 20.1%                  878 Apucaran-230  1   -27.7   -23.0    36.6
                                                 42.6%                 2472 Sarandi--138  1    58.2   -24.0    63.9 1.000*        22
 878  230  0   0.995     0.0     0.0     0.0     0.0     0.0     0.0
Apucaran-230   -68.9     0.0     0.0     0.0     0.0     0.0     0.0
                                                 17.9%                  872 Sarandi--230  1    27.8    16.7    32.6
                                                 53.4%                  879 Apucaran-138  1    63.8    47.6    80.0 0.940*        22
                                                 53.3%                  879 Apucaran-138  2    63.7    47.5    79.9 0.940*        22
                                                 40.1%                  884 Figueira-230  1   111.5   -27.6   115.5
                                                 21.4%                  954 CMourao--230  1   -65.7    14.6    67.7               20
                                                 57.8%                 1028 LondrinE-230  1  -201.2   -98.8   225.3               20
 884  230  0   1.000     0.0     0.0     0.0     0.0     0.0     0.0
Figueira-230   -76.4     0.0     0.0     0.0     0.0     0.0     0.0
                                                 17.6%                  615 CHAVANTE-230  1    -6.8   -40.7    41.3               05
                                                 20.3%                  827 Jaguaria-230  1    57.9    -4.9    58.1
                                                 29.4%                  829 PGrossaN-230  1   -38.7    26.6    47.0
                                                 38.6%                  878 Apucaran-230  1  -108.7    23.3   111.2
                                                 32.4%                 2485 Figueira-138  2    48.5    -1.9    48.5 1.024*        22
                                                 31.9%                 9333 Figueira-FIC  1    47.8    -2.5    47.9 1.024*        22
 886  230  0   1.038     0.0     0.0     0.0     0.0     0.0     0.0
Ibipora--230   -66.4     0.0     0.0     0.0     0.0     0.0     0.0
                                                 65.5%                  887 Ibipora--138  1   101.8    -6.8    98.3 1.043S        22
```

```
                                                 60.9%                 887 Ibipora--138  2    94.6    -6.4    91.3 1.043S        22
                                                 41.8%                1028 LondrinE-230  1   -98.2     6.6    94.8               20
                                                 41.8%                1028 LondrinE-230  2   -98.2     6.6    94.8               20
  889  230  0   1.031     0.0     0.0     0.0     0.0     0.0     0.0
 LondrinC-230   -67.8     0.0     0.0     0.0     0.0     0.0     0.0
                                                 47.8%                 890 Londrina-138  1    72.8    12.9    71.7 1.023*        22
                                                 48.4%                 890 Londrina-138  2    73.6    13.0    72.6 1.023*        22
                                                 45.2%                1029 LondrinF-230  1  -146.4   -25.9   144.2               20
  895  525  0   0.989     0.0     0.0     0.0     0.0     0.0     0.0
 Bateias--525   -71.4     0.0     0.0     0.0     0.0     0.0     0.0
                                                 49.9%                 112 Bateias500-1  1   618.6  -170.3   648.7               01
                                                 49.9%                 113 Bateias500-2  1   618.6  -170.3   648.7               01
                                                 42.6%                 814 Bateias--230  1   226.6   112.3   255.7
                                                 42.6%                 814 Bateias--230  2   226.6   112.3   255.7
                                                 54.9%                 933 Areia----525  1 -1146.3    13.1  1159.2               20
                                                 26.5%                 959 Curitiba-525  1  -544.1   102.8   559.9               20
CEPEL - CENTRO DE PESQUISAS DE ENERGIA ELETRICA - PROGRAMA DE ANALISE DE REDES - V08MAR05A                                 PAG. 272

ANUAL 06/07 * SETEMBRO 2006 PESADA S/SE 19H N/NE 19H * ANAT0 - FSE - C13
RELATORIO COMPLETO DO SISTEMA * AREA 21 * *              COPEL              *

X----------------- D A D O S  -  B A R R A -------------------------X------------ F L U X O S  -  C I R C U I T O S ------------X
 DA BARRA      TENSAO GERACAO INJ EQV  CARGA   ELO CC  SHUNT    MOTOR
 NUM. KV TIPO   MOD/     MW/     MW/     MW/     MW/   Mvar/     MW/
     NOME       ANG     Mvar    Mvar    Mvar    Mvar   EQUIV    Mvar  PARA BARRA                    FLUXOS
                                                FLUXO % SHUNT L         NUM.     NOME     NC     MW    Mvar  MVA/V_d   TAP  DEFAS TIE
X------------X-------X-------X-------X-------X-------X-------X-------X----X------------X--X-------X-------X-------X------X-----X---X

  896  525  0   1.023     0.0     0.0     0.0     0.0     0.0     0.0
 CascavOe-525   -51.3     0.0     0.0     0.0     0.0     0.0     0.0
                                                 53.2%                 897 SCaxias--525  1  -886.2    89.3   870.4
                                                 21.5%                 999 IvaiporE-525  1   491.3  -193.4   516.0               20
                                                 33.3%                2458 CascavOe-230  1   197.4    52.0   199.5
                                                 33.3%                2458 CascavOe-230  2   197.4    52.0   199.5
  897  525  0   1.020     0.0     0.0     0.0     0.0     0.0     0.0
 SCaxias--525   -47.7     0.0     0.0     0.0     0.0     0.0     0.0
                                                 89.0%                 808 SCAXIAS--4GR  1 -1197.6   235.6  1196.2 1.024F        38
                                                  0.0%                 809 SCAXIAS--000  1     0.0     0.0     0.0 1.024F        38
                                                 53.7%                 896 CascavOe-525  1   890.0  -114.9   879.5
                                                 19.8%                1060 SSantiag-525  1   307.6  -120.7   323.8               20
  898  230  0   1.047     0.0     0.0     0.0     0.0     0.0     0.0
 FChopim--230   -50.3     0.0     0.0     0.0     0.0     0.0     0.0
                                                 39.3%                 839 Cascavel-230  1    77.8     1.9    74.3
                                                 71.5%                 848 FChopim--138  1   112.3     3.1   107.2 1.041*        22
                                                 56.0%                1047 SOsorio--230  1  -190.0    -5.0   181.5               20
 2353  230  0   1.024     0.0     0.0     0.0     0.0     0.0     0.0
 CAssobio-230   -74.2     0.0     0.0     0.0     0.0     0.0     0.0
                                                 25.2%                 818 DISJoseP-230  1    72.3    26.4    75.2
                                                 47.1%                 822 Umbara-1-230  1  -132.8   -54.6   140.3
                                                 21.0%                2354 CAssobio-138  1    15.0     5.8    15.7 1.018*        22
                                                 20.0%                2354 CAssobio-138  2    14.4     5.5    15.0 1.018*        22
                                                 34.5%                9332 CAssobio--13  1    15.5     8.4    17.3 0.992*        22
                                                 34.6%                9332 CAssobio--13  2    15.6     8.4    17.3 0.992*        22
 2458  230  0   1.041     0.0     0.0     0.0     0.0     0.0     0.0
 CascavOe-230   -52.7     0.0     0.0     0.0     0.0     0.0     0.0
                                                 26.7%                 839 Cascavel-230  1    88.0    41.0    93.3
                                                 27.9%                 839 Cascavel-230  2    92.1    46.9    99.4
                                                 32.5%                 896 CascavOe-525  1  -197.4   -47.0   195.0 1.023*
                                                 32.5%                 896 CascavOe-525  2  -197.4   -47.0   195.0 1.023*
                                                 66.6%                 978 Guaira-F-230  1   214.7     6.0   206.4               20
```

```
 2477  230  0   1.005     0.0     0.0     0.0     0.0     0.0     0.0
 StaMonica230   -76.0     0.0     0.0     0.0     0.0     0.0     0.0
                                                52.2%                 817 GPSouza--230  1   -93.1   -23.5    95.6
                                                24.6%                 819 Pilarzin-230  1   -36.9   -26.1    45.0
                                                46.2%                2478 StaMonica-69  1    65.0    24.8    69.3 0.967*        22
                                                46.2%                2478 StaMonica-69  2    65.0    24.8    69.3 0.967*        22
CEPEL - CENTRO DE PESQUISAS DE ENERGIA ELETRICA - PROGRAMA DE ANALISE DE REDES - V08MAR05A                                PAG. 273

ANUAL 06/07 * SETEMBRO 2006 PESADA S/SE 19H N/NE 19H * ANAT0 - FSE - C13


TOTAIS DA AREA 21


X--------X--------X--------X--------X--------X--------X--------X--------X
  GERACAO  INJ EQV   CARGA   ELO CC    SHUNT   EXPORT   IMPORT   PERDAS
    MW/      MW/      MW/      MW/     Mvar/     MW/      MW/      MW/
   Mvar     Mvar     Mvar     Mvar     EQUIV    Mvar     Mvar     Mvar
X--------X--------X--------X--------X--------X--------X--------X--------X

      0.0      0.0      0.0      0.0     14.2   8219.1   8256.7     37.6
      0.0      0.0      0.0      0.0      0.0   1328.0   1605.3    291.6
CEPEL - CENTRO DE PESQUISAS DE ENERGIA ELETRICA - PROGRAMA DE ANALISE DE REDES - V08MAR05A                                PAG. 274

ANUAL 06/07 * SETEMBRO 2006 PESADA S/SE 19H N/NE 19H * ANAT0 - FSE - C13
RELATORIO COMPLETO DO SISTEMA * AREA 22 * *        COPEL - SECUNDARIA        *

X----------------- D A D O S  -  B A R R A -------------------------X------------ F L U X O S  -  C I R C U I T O S ------------X
 DA BARRA      TENSAO GERACAO INJ EQV  CARGA   ELO CC  SHUNT    MOTOR
 NUM. KV TIPO   MOD/     MW/     MW/     MW/     MW/   Mvar/     MW/
     NOME       ANG     Mvar    Mvar    Mvar    Mvar   EQUIV    Mvar  PARA BARRA                    FLUXOS
                                                FLUXO % SHUNT L         NUM.     NOME     NC     MW    Mvar  MVA/V_d   TAP  DEFAS TIE
X------------X-------X-------X-------X-------X-------X-------X-------X----X------------X--X-------X-------X-------X------X-----X---X

  823  138  0   1.022     0.0     0.0     0.0     0.0     0.0     0.0
 Areia----138   -55.6     0.0     0.0     0.0     0.0     0.0     0.0
                                                13.8%                 835 Socorro--138  1    -6.4    13.9    14.9
                                                35.7%                 836 UVitoria-138  1    50.7    -6.5    50.0
                                                23.9%                 836 UVitoria-138  2    28.9    -4.9    28.7
                                                14.8%                 934 Areia----230  1     1.2   -22.6    22.2              20
                                                59.7%                2454 CSegredo-138  1   -76.3    42.2    85.3
                                                14.5%                9335 Areia----FIC  1     2.0   -22.1    21.7
  825  138  0   0.986     0.0     0.0    23.3     0.0     4.7     0.0
 Guarapua-138   -53.7     0.0     0.0     8.4     0.0     0.0     0.0
                                                46.8%                 807 StaClara-138  1   -78.2    17.6    81.4              39
                                                63.2%                 826 Irati----138  1    76.7   -21.5    80.8
                                                19.7%                 837 VilaCarl-138  1   -24.9    -0.3    25.3
                                                10.3%                2420 Guarapuav-69  1     3.1     0.5     3.2 0.985*
  826  138  0   0.964     1.1     0.0    41.0     0.0     4.5     0.0
 Irati----138   -65.0     0.0     0.0    17.4     0.0     0.0     0.0
                                                61.8%                 825 Guarapua-138  1   -69.9    30.3    79.1
                                                24.7%                 832 RioAzul--138  1   -26.2     0.6    27.2
                                                57.9%                 833 Sabara---138  1    56.2   -43.9    74.0
  828  138  0   0.982    15.0     0.0    18.6     0.0     2.3     0.0
 Pitanga--138   -72.2     0.0     0.0     8.8     0.0     0.0     0.0
                                                 5.3%                 888 Ivaipora-138  1    -3.6    -6.5     7.6
  830  138  0   1.007     0.0     0.0     0.0     0.0     0.0     0.0
 PGrossaN-138   -73.5     0.0     0.0     0.0     0.0     0.0     0.0
                                                44.3%                 829 PGrossaN-230  1   -13.7   -30.5    33.2              21
```

```
                                                   43.6%                 829 PGrossaN-230  2   -13.5   -30.0    32.7                21
                                                   60.9%                 833 Sabara---138  1   -33.1    53.8    62.8
                                                   17.0%                2417 Belem----138  1    25.4    -2.0    25.3
                                                   32.5%                2439 CTO215BTV138  1    34.9     8.7    35.7
  832  138  0   0.972     0.0     0.0    11.0     0.0     1.1     0.0
 RioAzul--138   -63.8     0.0     0.0     3.9     0.0     0.0     0.0
                                                   24.8%                 826 Irati----138  1    26.4    -1.8    27.2
                                                   38.9%                 836 UVitoria-138  1   -37.4    -1.0    38.5
  833  138  0   0.998     0.0     0.0    18.3     0.0     4.8     0.0
 Sabara---138   -72.7     0.0     0.0     9.4     0.0     0.0     0.0
                                                   55.8%                 826 Irati----138  1   -51.9    48.8    71.4
                                                   61.4%                 830 PGrossaN-138  1    33.6   -53.4    63.3
  835  138  0   1.002     0.0     0.0     8.7     0.0     0.0     0.0
 Socorro--138   -54.3     0.0     0.0     2.7     0.0     0.0     0.0
                                                   17.5%                 823 Areia----138  1     6.6   -17.8    18.9
                                                   21.0%                 837 VilaCarl-138  1   -15.3    15.1    21.5
CEPEL - CENTRO DE PESQUISAS DE ENERGIA ELETRICA - PROGRAMA DE ANALISE DE REDES - V08MAR05A                                PAG. 275

ANUAL 06/07 * SETEMBRO 2006 PESADA S/SE 19H N/NE 19H * ANAT0 - FSE - C13
RELATORIO COMPLETO DO SISTEMA * AREA 22 * *        COPEL - SECUNDARIA        *

X----------------- D A D O S  -  B A R R A -------------------------X------------ F L U X O S  -  C I R C U I T O S ------------X
 DA BARRA      TENSAO GERACAO INJ EQV  CARGA   ELO CC  SHUNT    MOTOR
 NUM. KV TIPO   MOD/     MW/     MW/     MW/     MW/   Mvar/     MW/
     NOME       ANG     Mvar    Mvar    Mvar    Mvar   EQUIV    Mvar  PARA BARRA                    FLUXOS
                                                FLUXO % SHUNT L         NUM.     NOME     NC     MW    Mvar  MVA/V_d   TAP  DEFAS TIE
X------------X-------X-------X-------X-------X-------X-------X-------X----X------------X--X-------X-------X-------X------X-----X---X

  836  138  0   1.012     0.6     0.0    40.2     0.0     9.8     0.0
 UVitoria-138   -58.5     0.0     0.0    13.4     0.0     0.0     0.0
                                                   35.5%                 823 Areia----138  1   -50.1    -4.0    49.7
                                                   23.5%                 823 Areia----138  2   -28.4     1.8    28.1
                                                   38.9%                 832 RioAzul--138  1    39.0    -1.3    38.5
  837  138  0   0.991     0.0     0.0    23.2     0.0     4.7     0.0
 VilaCarl-138   -52.9     0.0     0.0     7.7     0.0     0.0     0.0
                                                   38.0%                 807 StaClara-138  1   -63.8    15.1    66.2                39
                                                   19.8%                 825 Guarapua-138  1    25.0    -0.8    25.3
                                                   23.0%                 835 Socorro--138  1    15.6   -17.3    23.5
  838  138  0   1.003     0.0     0.0    21.8     0.0     2.4     0.0
 AChateau-138   -63.3     0.0     0.0     6.7     0.0     0.0     0.0
                                                   10.3%                 851 Palotina-138  1     7.2    -9.2    11.7
                                                   31.8%                 854 Pinheiro-138  1   -38.9     4.4    39.1
                                                   37.3%                 874 Umuarama-138  1    46.6    -4.8    46.7
                                                   28.9%                2463 Copacol--138  1   -36.7     5.4    37.0
  840  138  0   1.031     0.0     0.0    30.3     0.0     2.5     0.0
 Cascavel-138   -57.2     0.0     0.0    17.7     0.0     0.0     0.0
                                                   76.4%                 839 Cascavel-230  1  -114.7   -28.5   114.6                21
                                                   80.7%                 839 Cascavel-230  2  -121.0   -30.1   121.0                21
                                                   75.7%                 839 Cascavel-230  3  -113.6   -28.2   113.6                21
                                                   39.8%                 841 CeuAzul--138  1    49.7    20.5    52.1
                                                   29.2%                 850 Medianei-138  1    43.8    28.1    50.5
                                                   46.4%                 854 Pinheiro-138  1    62.3     5.8    60.8
                                                   46.4%                 854 Pinheiro-138  2    62.3     5.8    60.8
                                                   44.6%                 857 Toledo---138  1    55.0     3.5    53.5
                                                   34.5%                2457 Olimpico-138  1    45.9     7.8    45.2
  841  138  0   0.986     0.0     0.0     8.6     0.0     2.3     0.0
 CeuAzul--138   -60.1     0.0     0.0     4.5     0.0     0.0     0.0
                                                   40.7%                 840 Cascavel-138  1   -48.5   -20.3    53.4
                                                   46.3%                 850 Medianei-138  1    39.9    18.1    44.5
  842  138  0   0.992     0.0     0.0    32.5     0.0     7.1     0.0
```

```
 2Vizinho-138   -56.8     0.0     0.0    11.4     0.0     0.0     0.0
                                              29.4%                 845 FBeltrao-138  1    31.5    -4.1    32.1
                                              50.8%                 848 FChopim--138  1   -64.0    -0.2    64.6
  844  138  0   0.897     0.0     0.0    25.2     0.0     9.6     0.0
 FIguacu--138   -65.0     0.0     0.0    10.8     0.0     0.0     0.0
                                              31.9%                 850 Medianei-138  1   -37.5   -32.2    55.1
                                              59.3%                 858 VYolanda-138  1    59.1    27.9    72.9
                                              47.2%                2498 AcarayCF-138  1   -46.8     3.2    52.4
CEPEL - CENTRO DE PESQUISAS DE ENERGIA ELETRICA - PROGRAMA DE ANALISE DE REDES - V08MAR05A                          PAG. 276

ANUAL 06/07 * SETEMBRO 2006 PESADA S/SE 19H N/NE 19H * ANAT0 - FSE - C13
RELATORIO COMPLETO DO SISTEMA * AREA 22 * *        COPEL - SECUNDARIA        *

X----------------- D A D O S  -  B A R R A ------------------------X------------ F L U X O S  -  C I R C U I T O S ------------X
 DA BARRA      TENSAO GERACAO INJ EQV  CARGA   ELO CC  SHUNT    MOTOR
 NUM. KV TIPO   MOD/     MW/     MW/     MW/     MW/   Mvar/     MW/
     NOME       ANG     Mvar    Mvar    Mvar    Mvar   EQUIV    Mvar  PARA BARRA                    FLUXOS
                                                FLUXO % SHUNT L        NUM.     NOME     NC     MW    Mvar  MVA/V_d   TAP  DEFAS TIE
X------------X-------X-------X-------X-------X-------X-------X-------X----X------------X--X-------X-------X-------X------X-----X---X

  845  138  0   0.985     0.0     0.0    39.7     0.0     4.7     0.0
 FBeltrao-138   -58.5     0.0     0.0    14.2     0.0     0.0     0.0
                                              29.2%                 842 2Vizinho-138  1   -31.2     2.7    31.8
                                              11.4%                 853 PBranco--138  1    -7.0   -12.7    14.8
                                               1.2%                 855 Realeza--138  1    -1.5     0.5     1.6
  847  138  0   1.022     0.0     0.0    14.3     0.0     2.5     0.0
 Guaira---138   -63.4     0.0     0.0     4.7     0.0     0.0     0.0
                                              39.1%                 846 Guaira---230  1   -55.5   -22.5    58.6                21
                                              13.9%                 849 MCRondon-138  1    -2.9    15.8    15.7
                                               9.1%                 851 Palotina-138  1     9.8     6.7    11.6
                                         SUP 146.4%                1091 EldoradF-138  1    34.3    -2.2    33.7                20
  848  138  0   1.007    29.0     0.0     0.0     0.0     0.0     0.0
 FChopim--138   -54.3     0.0     0.0     0.0     0.0     0.0     0.0
                                              50.8%                 842 2Vizinho-138  1    65.0     1.3    64.5
                                              31.4%                 854 Pinheiro-138  1    35.6   -18.6    39.9
                                              39.2%                 855 Realeza--138  1    49.3     0.9    49.0
                                              74.4%                 898 FChopim--230  1  -112.3     4.8   111.6                21
                                              12.0%                2452 QIguacu--138  1    -8.7    11.7    14.4
  849  138  0   0.998     0.0     0.0    30.6     0.0     4.8     0.0
 MCRondon-138   -62.6     0.0     0.0    17.6     0.0     0.0     0.0
                                              17.1%                 847 Guaira---138  1     3.1   -19.0    19.3
                                              35.0%                 857 Toledo---138  1   -33.7     6.2    34.3
  850  138  0   0.961     0.0     0.0    44.1     0.0    11.1     0.0
 Medianei-138   -61.7     0.0     0.0    23.2     0.0     0.0     0.0
                                              30.6%                 840 Cascavel-138  1   -42.9   -27.3    53.0
                                              47.2%                 841 CeuAzul--138  1   -39.4   -18.4    45.3
                                              30.6%                 844 FIguacu--138  1    38.2    33.6    53.0
  851  138  0   1.008     0.0     0.0    16.9     0.0     6.1     0.0
 Palotina-138   -63.8     0.0     0.0     8.8     0.0     0.0     0.0
                                               8.7%                 838 AChateau-138  1    -7.2     6.9     9.9
                                              10.7%                 847 Guaira---138  1    -9.7    -9.6    13.6
  853  138  0   1.001     0.0     0.0     0.0     0.0     0.0     0.0
 PBranco--138   -58.3     0.0     0.0     0.0     0.0     0.0     0.0
                                               9.6%                 845 FBeltrao-138  1     7.1    10.2    12.4
                                              50.0%                 852 PBranco--230  1   -30.4   -14.1    33.5                21
                                              50.5%                 852 PBranco--230  2   -30.7   -14.2    33.8                21
                                              45.7%                2442 Clevelan-138  1    22.1     3.8    22.4
                                              85.5%                9339 PBranco--FIC  1    32.0    14.3    35.1 0.967*
CEPEL - CENTRO DE PESQUISAS DE ENERGIA ELETRICA - PROGRAMA DE ANALISE DE REDES - V08MAR05A                          PAG. 277
```

ANUAL 06/07 * SETEMBRO 2006 PESADA S/SE 19H N/NE 19H * ANAT0 - FSE - C13
RELATORIO COMPLETO DO SISTEMA * AREA 22 * * COPEL - SECUNDARIA *

| DADOS - BARRA | | | | | | | | FLUXOS - CIRCUITOS | | | | | | | |
|---|---|---|---|---|---|---|---|---|---|---|---|---|---|---|---|
| DA BARRA NUM. KV TIPO NOME | TENSAO MOD/ ANG | GERACAO MW/ Mvar | INJ EQV MW/ Mvar | CARGA MW/ Mvar | ELO CC MW/ Mvar FLUXO % | SHUNT Mvar/ EQUIV SHUNT L | MOTOR MW/ Mvar | PARA BARRA NUM. | NOME | NC | MW | FLUXOS Mvar | MVA/V_d | TAP | DEFAS TIE |
| 854 138 0 | 1.018 | 0.0 | 0.0 | 44.7 | 0.0 | 7.5 | 0.0 | | | | | | | | |
| Pinheiro-138 | -58.8 | 0.0 | 0.0 | 19.3 | 0.0 | 0.0 | 0.0 | | | | | | | | |
| | | | | | 32.3% | | | 838 | AChateau-138 | 1 | 39.9 | -6.3 | 39.7 | | |
| | | | | | 46.5% | | | 840 | Cascavel-138 | 1 | -61.7 | -5.4 | 60.9 | | |
| | | | | | 46.5% | | | 840 | Cascavel-138 | 2 | -61.7 | -5.4 | 60.9 | | |
| | | | | | 29.6% | | | 848 | FChopim--138 | 1 | -34.6 | 16.3 | 37.6 | | |
| | | | | | 68.5% | | | 2451 | Pinheiros-69 | 1 | 13.1 | -4.7 | 13.7 | 1.000S | |
| | | | | | 30.4% | | | 2453 | TDO833FGB138 | 1 | 30.8 | -5.3 | 30.7 | | |
| | | | | | 11.4% | | | 2457 | Olimpico-138 | 1 | -14.5 | 4.5 | 14.9 | | |
| | | | | | 34.3% | | | 2463 | Copacol--138 | 1 | 44.0 | -5.4 | 43.6 | | |
| 855 138 0 | 0.983 | 0.0 | 0.0 | 46.7 | 0.0 | 7.0 | 0.0 | | | | | | | | |
| Realeza--138 | -58.3 | 0.0 | 0.0 | 14.6 | 0.0 | 0.0 | 0.0 | | | | | | | | |
| | | | | | 3.3% | | | 845 | FBeltrao-138 | 1 | 1.5 | -4.1 | 4.5 | | |
| | | | | | 39.2% | | | 848 | FChopim--138 | 1 | -48.2 | -0.9 | 49.0 | | |
| | | | | | 2.2% | | | 2495 | SAntSudo-138 | 1 | 0.0 | -2.6 | 2.6 | | |
| 857 138 0 | 1.007 | 0.0 | 0.0 | 35.9 | 0.0 | 11.0 | 0.0 | | | | | | | | |
| Toledo---138 | -60.6 | 0.0 | 0.0 | 13.8 | 0.0 | 0.0 | 0.0 | | | | | | | | |
| | | | | | 44.7% | | | 840 | Cascavel-138 | 1 | -54.0 | -3.2 | 53.7 | | |
| | | | | | 35.5% | | | 849 | MCRondon-138 | 1 | 34.2 | -7.4 | 34.8 | | |
| | | | | | 17.6% | | | 2453 | TDO833FGB138 | 1 | -16.2 | 7.7 | 17.8 | | |
| 858 138 0 | 0.882 | 0.0 | 0.0 | 44.4 | 0.0 | 5.6 | 0.0 | | | | | | | | |
| VYolanda-138 | -66.1 | 0.0 | 0.0 | 26.1 | 0.0 | 0.0 | 0.0 | | | | | | | | |
| | | | | | 59.6% | | | 844 | FIguacu--138 | 1 | -58.7 | -27.0 | 73.3 | | |
| | | | | | 6.9% | | | 2450 | Portal---138 | 1 | 14.3 | 6.5 | 17.8 | | |
| 859 138 0 | 0.990 | 0.0 | 0.0 | 18.4 | 0.0 | 2.4 | 0.0 | | | | | | | | |
| AlParana-138 | -70.5 | 0.0 | 0.0 | 10.7 | 0.0 | 0.0 | 0.0 | | | | | | | | |
| | | | | | 18.5% | | | 869 | Maringa--138 | 1 | 7.2 | -16.4 | 18.1 | | |
| | | | | | 27.7% | | | 870 | Paranava-138 | 1 | -25.6 | 8.1 | 27.1 | | |
| 860 138 0 | 1.001 | 0.0 | 0.0 | 0.0 | 0.0 | 0.0 | 0.0 | | | | | | | | |
| CMourao--138 | -68.7 | 0.0 | 0.0 | 0.0 | 0.0 | 0.0 | 0.0 | | | | | | | | |
| | | | | | 14.7% | | | 866 | Mambore--138 | 1 | 19.0 | 6.3 | 20.0 | | |
| | | | | | 26.9% | | | 871 | SDumont--138 | 1 | 26.3 | 1.2 | 26.3 | | |
| | | | | | 23.9% | | | 871 | SDumont--138 | 2 | 38.3 | 9.9 | 39.5 | | |
| | | | | | 22.7% | | | 888 | Ivaipora-138 | 1 | 26.6 | -6.0 | 27.2 | | |
| | | | | | 79.7% | | | 954 | CMourao--230 | 1 | -118.6 | -15.4 | 119.5 | | 20 |
| | | | | | 9.5% | | | 2467 | CMourao---69 | 1 | -1.6 | 1.2 | 2.0 | 0.997* | |
| | | | | | 8.6% | | | 9860 | CMO669COA138 | 1 | 10.0 | 2.7 | 10.3 | | |
| 861 138 0 | 0.982 | 0.0 | 0.0 | 34.1 | 0.0 | 3.5 | 0.0 | | | | | | | | |
| Cianorte-138 | -70.7 | 0.0 | 0.0 | 17.2 | 0.0 | 0.0 | 0.0 | | | | | | | | |
| | | | | | 16.6% | | | 869 | Maringa--138 | 1 | 2.0 | -15.9 | 16.3 | | |
| | | | | | 27.2% | | | 871 | SDumont--138 | 1 | -26.2 | -1.8 | 26.7 | | |
| | | | | | 11.3% | | | 874 | Umuarama-138 | 1 | -10.0 | 4.0 | 10.9 | | |



ANUAL 06/07 * SETEMBRO 2006 PESADA S/SE 19H N/NE 19H * ANAT0 - FSE - C13
RELATORIO COMPLETO DO SISTEMA * AREA 22 * * COPEL - SECUNDARIA *

DADOS - BARRA ---------- FLUXOS - CIRCUITOS
DA BARRA NUM. KV TIPO | TENSAO MOD/ | GERACAO MW/ | INJ EQV MW/ | CARGA MW/ | ELO CC MW/ | SHUNT Mvar/ | MOTOR MW/

```
     NOME       ANG     Mvar    Mvar    Mvar    Mvar   EQUIV    Mvar  PARA BARRA                    FLUXOS
                                               FLUXO % SHUNT L         NUM.     NOME     NC     MW    Mvar  MVA/V_d   TAP  DEFAS TIE
X------------X-------X-------X-------X-------X-------X-------X-------X----X------------X--X-------X-------X-------X------X-----X---X

  862  138  0   0.997     0.0     0.0     8.8     0.0     0.0     0.0
 CGaucha--138   -66.4     0.0     0.0     2.6     0.0     0.0     0.0
                                              32.7%                  865 Loanda---138  1   -44.4    -1.8    44.5
                                              26.4%                  874 Umuarama-138  1    35.6    -0.8    35.7
  863  138  0   0.983     0.0     0.0    15.0     0.0     4.6     0.0
 Goioere--138   -69.9     0.0     0.0     5.9     0.0     0.0     0.0
                                               6.9%                  866 Mambore--138  1    -8.0    -4.4     9.3
                                               6.3%                  874 Umuarama-138  1    -7.0     3.1     7.8
  864  138  0   0.999     0.0     0.0    61.8     0.0    14.4     0.0
 JAlvorad-138   -72.2     0.0     0.0    22.7     0.0     0.0     0.0
                                              15.6%                 2470 Maringa3-138  1   -14.6    -8.1    16.7
                                              14.4%                 2473 JTropica-138  1    -9.6    11.5    15.0
                                              39.5%                 2493 MGA666CO-138  1   -37.6   -11.7    39.5
  865  138  0   1.020     0.0     0.0    22.3     0.0     0.0     0.0
 Loanda---138   -63.0     0.0     0.0    10.3     0.0     0.0     0.0
                                              42.4%                  546 ROSANA---138  1  -126.3    -7.1   124.1              05
                                              32.7%                  862 CGaucha--138  1    45.3     0.8    44.4
                                              45.5%                  870 Paranava-138  1    58.7    -4.0    57.7
  866  138  0   0.990     0.0     0.0    11.7     0.0     2.4     0.0
 Mambore--138   -69.4     0.0     0.0     4.3     0.0     0.0     0.0
                                              15.3%                  860 CMourao--138  1   -18.9    -8.0    20.7
                                               6.0%                  863 Goioere--138  1     8.0     0.9     8.1
                                              26.6%                 2469 Mambore---69  1    -0.8     5.2     5.3 0.973*
  867  138  0   1.001     0.0     0.0    25.0     0.0     4.8     0.0
 Mandagua-138   -71.9     0.0     0.0    11.6     0.0     0.0     0.0
                                              13.8%                 2472 Sarandi--138  1   -11.6     7.6    13.8
                                              19.6%                 2491 CREI+FGS-138  1   -13.4   -14.3    19.6
  869  138  0   1.007     0.0     0.0    37.6     0.0     8.5     0.0
 Maringa--138   -71.6     0.0     0.0    16.9     0.0     0.0     0.0
                                              15.4%                  859 AlParana-138  1    -7.0    13.5    15.1
                                              12.3%                  861 Cianorte-138  1    -1.9    12.0    12.0
                                              57.5%                  868 Maringa--230  1   -73.8   -45.7    86.3              21
                                              56.3%                  868 Maringa--230  2   -72.3   -44.7    84.4              21
                                              21.3%                  899 Horizont-138  1    27.2    29.4    39.8
                                              36.8%                 2470 Maringa3-138  1    40.4    12.3    42.0
                                              37.4%                 2493 MGA666CO-138  1    49.8    14.9    51.7
  870  138  0   0.993     0.0     0.0    30.8     0.0     7.1     0.0
 Paranava-138   -69.4     0.0     0.0    10.5     0.0     0.0     0.0
                                              28.1%                  859 AlParana-138  1    25.8    -9.0    27.6
                                              45.2%                  865 Loanda---138  1   -56.6     5.6    57.3
CEPEL - CENTRO DE PESQUISAS DE ENERGIA ELETRICA - PROGRAMA DE ANALISE DE REDES - V08MAR05A                                PAG. 279

ANUAL 06/07 * SETEMBRO 2006 PESADA S/SE 19H N/NE 19H * ANAT0 - FSE - C13
RELATORIO COMPLETO DO SISTEMA * AREA 22 * *        COPEL - SECUNDARIA        *

X----------------- D A D O S  -  B A R R A ------------------------X------------ F L U X O S  -  C I R C U I T O S ------------X
 DA BARRA      TENSAO GERACAO INJ EQV  CARGA   ELO CC  SHUNT    MOTOR
 NUM. KV TIPO   MOD/     MW/     MW/     MW/     MW/   Mvar/     MW/
     NOME       ANG     Mvar    Mvar    Mvar    Mvar   EQUIV    Mvar  PARA BARRA                    FLUXOS
                                               FLUXO % SHUNT L         NUM.     NOME     NC     MW    Mvar  MVA/V_d   TAP  DEFAS TIE
X------------X-------X-------X-------X-------X-------X-------X-------X----X------------X--X-------X-------X-------X------X-----X---X

  871  138  0   0.998     0.0     0.0    37.9     0.0     2.4     0.0
 SDumont--138   -68.9     0.0     0.0    14.2     0.0     0.0     0.0
                                              26.9%                  860 CMourao--138  1   -26.3    -1.5    26.3
                                              24.0%                  860 CMourao--138  2   -38.2   -10.2    39.6
```

```
                                                                27.1%                  861 Cianorte-138  1    26.6     0.0    26.6
 874  138  0   0.980     0.0     0.0    50.4     0.0     6.9     0.0
Umuarama-138   -69.2     0.0     0.0    21.1     0.0     0.0     0.0
                                                                36.9%                  838 AChateau-138  1   -45.0     4.2    46.2
                                                                13.6%                  861 Cianorte-138  1    10.1    -8.0    13.2
                                                                26.4%                  862 CGaucha--138  1   -34.9    -1.1    35.7
                                                                 7.7%                  863 Goioere--138  1     7.1    -6.3     9.6
                                                                27.1%                 2465 Altonia--138  1    12.4    -3.0    13.0
 875  138  0   0.965     0.0     0.0    20.3     0.0     4.5     0.0
Andira-B-138   -74.1     0.0     0.0     8.6     0.0     0.0     0.0
                                                                55.9%                  876 Andira----88  1   -10.0    -4.1    11.2
                                                                57.1%                  876 Andira----88  2   -10.2    -4.2    11.4
                                                                27.8%                  877 Andira-A-138  1   -24.4     0.8    25.3
                                                                51.8%                 2489 SAPlatin-138  1    24.3     3.3    25.4
 876   88  0   1.026     0.0     0.0     0.0     0.0     0.0     0.0
Andira----88   -71.7     0.0     0.0     0.0     0.0     0.0     0.0
                                                                20.0%                  613 SALTOGRD-088  1   -10.1    -4.6    10.8                05
                                                                20.0%                  613 SALTOGRD-088  2   -10.1    -4.6    10.8                05
                                                                53.5%                  875 Andira-B-138  1    10.0     4.6    10.7 1.045F
                                                                54.6%                  875 Andira-B-138  2    10.2     4.7    10.9 1.045F
 877  138  0   0.965     0.0     0.0     0.0     0.0     0.0     0.0
Andira-A-138   -74.1     0.0     0.0     0.0     0.0     0.0     0.0
                                                                27.8%                  875 Andira-B-138  1    24.4    -0.8    25.3
                                                                15.5%                  880 Bandeira-138  1   -13.5     1.7    14.1
                                                                12.5%                  882 CProcopi-138  1   -10.9    -0.9    11.3
 879  138  0   1.030     0.0     0.0    32.5     0.0     7.6     0.0
Apucaran-138   -71.0     0.0     0.0    12.8     0.0     0.0     0.0
                                                                50.2%                  878 Apucaran-230  1   -63.8   -43.9    75.3                21
                                                                50.1%                  878 Apucaran-230  2   -63.7   -43.9    75.1                21
                                                                19.2%                  883 Faxinal--138  1    17.1     9.5    19.0
                                                                21.6%                  892 VeraCruz-138  1     6.6    17.5    18.2
                                                                49.3%                 2483 Araponga-138  1    44.8    41.4    59.2
                                                                29.3%                 2491 CREI+FGS-138  1    26.6    14.3    29.3
 880  138  0   0.967     0.0     0.0    15.9     0.0     2.2     0.0
Bandeira-138   -73.6     0.0     0.0     7.6     0.0     0.0     0.0
                                                                15.7%                  877 Andira-A-138  1    13.5    -2.9    14.3
                                                                33.6%                  887 Ibipora--138  1   -29.4    -2.4    30.5
CEPEL - CENTRO DE PESQUISAS DE ENERGIA ELETRICA - PROGRAMA DE ANALISE DE REDES - V08MAR05A                                   PAG. 280

ANUAL 06/07 * SETEMBRO 2006 PESADA S/SE 19H N/NE 19H * ANAT0 - FSE - C13
RELATORIO COMPLETO DO SISTEMA * AREA 22 * *        COPEL - SECUNDARIA        *

X----------------- D A D O S  -  B A R R A -------------------------X------------ F L U X O S  -  C I R C U I T O S ------------X
 DA BARRA      TENSAO GERACAO INJ EQV  CARGA   ELO CC  SHUNT    MOTOR
 NUM. KV TIPO   MOD/     MW/     MW/     MW/     MW/   Mvar/     MW/
     NOME       ANG     Mvar    Mvar    Mvar    Mvar   EQUIV    Mvar  PARA BARRA                    FLUXOS
                                                FLUXO % SHUNT L        NUM.     NOME     NC     MW    Mvar  MVA/V_d   TAP  DEFAS TIE
X------------X-------X-------X-------X-------X-------X-------X-------X----X------------X--X-------X-------X-------X------X-----X---X

 881  138  0   0.981     0.0     0.0    16.9     0.0     2.3     0.0
BVParais-138   -72.3     0.0     0.0     7.9     0.0     0.0     0.0
                                                                12.1%                  885 Floresto-138  1    11.3     2.5    11.8
                                                                30.6%                  890 Londrina-138  1   -28.2    -8.1    29.9
 882  138  0   0.971     0.0     0.0    33.3     0.0     9.1     0.0
CProcopi-138   -73.2     0.0     0.0    12.2     0.0     0.0     0.0
                                                                12.6%                  877 Andira-A-138  1    11.0    -1.9    11.5
                                                                50.1%                  887 Ibipora--138  1   -44.3    -1.2    45.6
 883  138  0   1.005     0.0     0.0    15.7     0.0     2.4     0.0
Faxinal--138   -72.1     0.0     0.0     5.7     0.0     0.0     0.0
                                                                21.3%                  879 Apucaran-138  1   -16.9   -12.7    21.0
```

```
                                                  8.7%                  888 Ivaipora-138  1     1.2     9.5     9.5
 885  138  0   0.975     0.0     0.0    11.3     0.0     0.0     0.0
Floresto-138   -72.8     0.0     0.0     4.4     0.0     0.0     0.0
                                                 12.7%                  881 BVParais-138  1   -11.3    -4.4    12.4
 887  138  0   1.001     0.0     0.0    17.5     0.0     7.2     0.0
Ibipora--138   -69.8     0.0     0.0     6.5     0.0     0.0     0.0
                                                 33.4%                  880 Bandeira-138  1    30.4    -0.8    30.4
                                                 50.0%                  882 CProcopi-138  1    45.6     0.7    45.5
                                                 68.3%                  886 Ibipora--230  1  -101.8    13.0   102.5                21
                                                 63.5%                  886 Ibipora--230  2   -94.6    12.1    95.2                21
                                                 49.3%                  892 VeraCruz-138  1    54.7   -26.5    60.7
                                                 27.0%                  894 Palermo--138  1    33.2    -2.0    33.2
                                                 12.9%                 2480 ASSAI----138  1    15.0     4.2    15.5
 888  138  0   0.991     0.0     0.0    23.6     0.0     2.4     0.0
Ivaipora-138   -72.0     0.0     0.0    10.0     0.0     0.0     0.0
                                                  3.0%                  828 Pitanga--138  1     3.6     2.2     4.3
                                                 22.0%                  860 CMourao--138  1   -26.1     2.4    26.4
                                                 11.4%                  883 Faxinal--138  1    -1.1   -12.2    12.4
 890  138  0   1.000     0.0     0.0    51.1     0.0    14.4     0.0
Londrina-138   -70.6     0.0     0.0    25.5     0.0     0.0     0.0
                                                 29.9%                  881 BVParais-138  1    28.6     6.3    29.3
                                                 48.9%                  889 LondrinC-230  1   -72.8    -9.3    73.4                21
                                                 49.5%                  889 LondrinC-230  2   -73.6    -9.4    74.2                21
                                                  3.9%                  892 VeraCruz-138  1     0.0    -5.2     5.3
                                                  6.9%                  894 Palermo--138  1    -1.8     9.3     9.4
                                                 76.0%                 2486 JBandeir-138  1    34.5    14.1    37.2
                                                 23.8%                 2488 ROLANDIA-138  1    24.9   -13.9    28.5
                                                  9.8%                 2492 LNA558DXT138  1     9.2    -3.0     9.6
CEPEL - CENTRO DE PESQUISAS DE ENERGIA ELETRICA - PROGRAMA DE ANALISE DE REDES - V08MAR05A                                PAG. 281

ANUAL 06/07 * SETEMBRO 2006 PESADA S/SE 19H N/NE 19H * ANAT0 - FSE - C13
RELATORIO COMPLETO DO SISTEMA * AREA 22 * *        COPEL - SECUNDARIA        *

X----------------- D A D O S  -  B A R R A -------------------------X------------ F L U X O S  -  C I R C U I T O S ------------X
 DA BARRA      TENSAO GERACAO INJ EQV  CARGA   ELO CC  SHUNT    MOTOR
 NUM. KV TIPO   MOD/     MW/     MW/     MW/     MW/   Mvar/     MW/
     NOME       ANG     Mvar    Mvar    Mvar    Mvar   EQUIV    Mvar  PARA BARRA                    FLUXOS
                                                FLUXO % SHUNT L         NUM.     NOME     NC     MW    Mvar  MVA/V_d   TAP  DEFAS TIE
X------------X-------X-------X-------X-------X-------X-------X-------X----X------------X--X-------X-------X-------X------X-----X---X

 891  138  0   1.001     0.0     0.0    17.8     0.0     9.6     0.0
RDavidsB-138   -70.8     0.0     0.0     8.1     0.0     0.0     0.0
                                                 37.5%                  892 VeraCruz-138  1   -36.4     5.0    36.8
                                                  0.2%                  893 RDavidsA-138  1    18.6    -3.5    18.9
 892  138  0   1.002     6.7     0.0    30.8     0.0    19.3     0.0
VeraCruz-138   -70.6     0.0     0.0    13.1     0.0     0.0     0.0
                                                 24.5%                  879 Apucaran-138  1    -6.3   -19.7    20.6
                                                 49.1%                  887 Ibipora--138  1   -54.3    26.7    60.4
                                                  3.0%                  890 Londrina-138  1     0.0     4.1     4.1
                                                 37.5%                  891 RDavidsB-138  1    36.5    -5.1    36.8
 893  138  0   1.001     0.0     0.0    20.2     0.0    16.8     0.0
RDavidsA-138   -70.8     0.0     0.0     9.3     0.0     0.0     0.0
                                                  0.2%                  891 RDavidsB-138  1   -18.6     3.5    18.9
                                                  4.4%                 2492 LNA558DXT138  1    -1.6     4.1     4.4
 894  138  0   0.997     0.0     0.0    31.3     0.0     4.8     0.0
Palermo--138   -70.5     0.0     0.0    13.6     0.0     0.0     0.0
                                                 27.0%                  887 Ibipora--138  1   -33.1     1.2    33.2
                                                  7.5%                  890 Londrina-138  1     1.8   -10.1    10.3
 899  138  0   1.002     0.0     0.0    42.8     0.0     0.0     0.0
Horizont-138   -71.8     0.0     0.0    16.9     0.0     0.0     0.0
```

```
                                                  21.4%                 869 Maringa--138  1   -27.1   -29.7    40.1
                                                  12.2%                2472 Sarandi--138  1   -15.7    12.8    20.2
 2350    1  0   0.912    11.6     0.0     0.0     0.0     0.0     0.0
 Chamine----6   -78.2     0.0     0.0     0.0     0.0     0.0     0.0
                                                  63.6%                2367 Chamine---69  1    11.6     0.0    12.7
 2351  138  0   0.994     0.0     0.0    29.3     0.0     0.0     0.0
 FazIguac-138   -75.5     0.0     0.0    11.2     0.0     0.0     0.0
                                                  22.1%                2354 CAssobio-138  1   -29.3   -11.2    31.6
 2352    1  0   0.981    13.6     0.0     0.0     0.0     0.0     0.0
 Guaricana--6   -81.0     0.0     0.0     0.0     0.0     0.0     0.0
                                                  34.7%                2374 Guaricana-69  1    13.6     0.0    13.9
 2354  138  0   1.000     0.0     0.0     0.0     0.0     0.0     0.0
 CAssobio-138   -75.0     0.0     0.0     0.0     0.0     0.0     0.0
                                                  21.9%                2351 FazIguac-138  1    29.4    10.7    31.3
                                                  21.3%                2353 CAssobio-230  1   -15.0    -5.5    16.0              21
                                                  20.4%                2353 CAssobio-230  2   -14.4    -5.2    15.3              21
CEPEL - CENTRO DE PESQUISAS DE ENERGIA ELETRICA - PROGRAMA DE ANALISE DE REDES - V08MAR05A                              PAG. 282

ANUAL 06/07 * SETEMBRO 2006 PESADA S/SE 19H N/NE 19H * ANAT0 - FSE - C13
RELATORIO COMPLETO DO SISTEMA * AREA 22 * *        COPEL - SECUNDARIA        *

X----------------- D A D O S  -  B A R R A -------------------------X------------ F L U X O S  -  C I R C U I T O S ------------X
 DA BARRA      TENSAO GERACAO INJ EQV  CARGA   ELO CC  SHUNT    MOTOR
 NUM. KV TIPO   MOD/     MW/     MW/     MW/     MW/   Mvar/     MW/
     NOME       ANG     Mvar    Mvar    Mvar    Mvar   EQUIV    Mvar  PARA BARRA                    FLUXOS
                                                FLUXO % SHUNT L        NUM.     NOME     NC     MW    Mvar  MVA/V_d   TAP  DEFAS TIE
X------------X-------X-------X-------X-------X-------X-------X-------X----X------------X--X-------X-------X-------X------X-----X---X

 2355   69  0   0.989     0.0     0.0    21.1     0.0     4.7     0.0
 Araucaria-69   -83.1     0.0     0.0     9.3     0.0     0.0     0.0
                                                   0.9%                2395 ARC081REP-69  1     0.1     0.0     0.1
                                                  23.9%                2402 Umbara-A--69  1   -30.6    -5.9    31.5
                                                  55.9%                2427 TOMAZCOEL-69  1    30.6     5.1    31.3
                                                  23.6%                2462 ARC082PCG-69  1   -21.2    -3.7    21.7
 2356   69  0   0.990     0.0     0.0    34.7     0.0     7.1     0.0
 Atuba-----69   -84.0     0.0     0.0    17.4     0.0     0.0     0.0
                                                  26.0%                2387 Pilarzinh-69  1   -21.7    -4.1    22.3
                                                  26.0%                2387 Pilarzinh-69  2   -21.7    -4.1    22.3
                                                  41.9%                2400 Taruma-L1-69  1    34.0     1.8    34.3
                                                  37.0%                2405 Taruma-L2-69  1    29.9     2.8    30.4
                                                  37.0%                2478 StaMonica-69  1   -28.7    -3.8    29.2
                                                  34.0%                2478 StaMonica-69  2   -26.4    -3.0    26.9
 2357   69  0   0.986     0.0     0.0    29.2     0.0     4.7     0.0
 Bacacheri-69   -84.2     0.0     0.0     8.9     0.0     0.0     0.0
                                                  52.9%                2387 Pilarzinh-69  1   -46.9    -9.7    48.6
                                                  53.3%                2387 Pilarzinh-69  2   -47.5    -9.0    49.1
                                                  50.2%                2408 AltGloria-69  1    65.2    14.5    67.8
 2358   69  0   0.985     0.0     0.0    35.3     0.0     9.3     0.0
 Barigui---69   -84.1     0.0     0.0    10.1     0.0     0.0     0.0
                                                   0.0%                2363 CComprido-69  1     0.0     0.0     0.0
                                                  59.2%                2368 CIndustri-69  1   -52.9    -8.8    54.5
                                                  62.6%                2368 CIndustri-69  2   -52.9    -8.8    54.5
                                                  43.5%                2397 SQuiteria-69  1    36.4     5.6    37.4
                                                  40.7%                2397 SQuiteria-69  2    36.4     5.6    37.4
                                                  11.3%                2404 ARC079BEK-69  1    -2.3     5.6     6.2
                                                   0.0%                2422 CBA063VVO-69  2     0.0     0.0     0.0
 2359  138  0   1.000     0.0     0.0     0.0     0.0     0.0     0.0
 Bateias--138   -75.0     0.0     0.0     0.0     0.0     0.0     0.0
                                                  34.9%                 814 Bateias--230  1   -50.5   -13.6    52.3              21
                                                  34.9%                 814 Bateias--230  2   -50.5   -13.6    52.3              21
```

```
                                                  38.4%                 2364 CLargo---138  1    25.2     5.1    25.7
                                                   9.3%                 2375 CLG089ITM138  1     4.6     0.6     4.6
                                                  65.8%                 2378 Lapa-----138  1    52.7    16.7    55.3
                                                  28.6%                 2391 DICLargo-138  1    18.5     4.8    19.1
 2360   69  0   0.975     0.0     0.0    48.1     0.0     0.0     0.0
 Batel-----69   -85.7     0.0     0.0    14.4     0.0     0.0     0.0
                                                  10.4%                 2365 Capanema--69  1    -4.6    -8.1     9.6
                                                  44.6%                 2397 SQuiteria-69  1   -43.5    -6.3    45.0
CEPEL - CENTRO DE PESQUISAS DE ENERGIA ELETRICA - PROGRAMA DE ANALISE DE REDES - V08MAR05A                              PAG. 283

ANUAL 06/07 * SETEMBRO 2006 PESADA S/SE 19H N/NE 19H * ANAT0 - FSE - C13
RELATORIO COMPLETO DO SISTEMA * AREA 22 * *        COPEL - SECUNDARIA        *

X----------------- D A D O S  -  B A R R A ------------------------X------------ F L U X O S  -  C I R C U I T O S ------------X
 DA BARRA      TENSAO GERACAO INJ EQV  CARGA   ELO CC  SHUNT    MOTOR
 NUM. KV TIPO   MOD/     MW/     MW/     MW/     MW/   Mvar/     MW/
     NOME       ANG     Mvar    Mvar    Mvar    Mvar   EQUIV    Mvar  PARA BARRA                    FLUXOS
                                                FLUXO % SHUNT L        NUM.     NOME     NC     MW    Mvar  MVA/V_d   TAP  DEFAS TIE
X------------X-------X-------X-------X-------X-------X-------X-------X----X------------X--X-------X-------X-------X------X-----X---X

 2361   69  0   0.974     0.0     0.0    38.3     0.0     0.0     0.0
 Boqueirao-69   -86.5     0.0     0.0     6.7     0.0     0.0     0.0
                                                  47.0%                 2401 Uberaba---69  1   -38.3    -6.7    39.9
                                                   0.0%                 2412 Tatu+Furu-69  1     0.0     0.0     0.0
 2362   69  0   0.999     0.0     0.0    13.5     0.0     0.0     0.0
 CBA057BOS-69   -82.5     0.0     0.0     3.9     0.0     0.0     0.0
                                                  16.5%                 2368 CIndustri-69  1    -6.6    -8.9    11.1
                                                   9.3%                 2370 ARC064CCL-69  1     6.0     1.7     6.3
                                                  20.0%                 2406 Umbara-B--69  1   -13.0     3.3    13.4
 2363   69  0   1.016     0.0     0.0     0.0     0.0     0.0     0.0
 CComprido-69   -79.4     0.0     0.0     0.0     0.0     0.0     0.0
                                                  47.1%                  816 CComprid-230  1   -57.1    -6.5    56.6               21
                                                  46.4%                  816 CComprid-230  2   -56.2    -6.4    55.7               21
                                                   0.0%                 2358 Barigui---69  1     0.0     0.0     0.0
                                                  44.2%                 2366 CentroCur-69  1    38.6     1.1    38.0
                                                  57.5%                 2381 Merces----69  1    53.0     9.1    52.9
                                                   9.2%                 2393 BAN091RMB-69  1    -5.9    -0.5     5.9
                                                  42.5%                 2396 RBranco---69  1    23.7     2.1    23.4
                                                   4.5%                 2422 CBA063VVO-69  2     4.0     1.2     4.1
 2364  138  0   0.998     0.0     0.0    20.5     0.0     7.2     0.0
 CLargo---138   -75.1     0.0     0.0    10.1     0.0     0.0     0.0
                                                  38.5%                 2359 Bateias--138  1   -25.2    -5.4    25.8
                                                   7.9%                 2391 DICLargo-138  1     4.7     2.4     5.3
 2365   69  0   0.977     0.0     0.0    36.5     0.0    18.3     0.0
 Capanema--69   -85.7     0.0     0.0    18.4     0.0     0.0     0.0
                                                  10.4%                 2360 Batel-----69  1     4.6     8.1     9.5
                                                  19.2%                 2401 Uberaba---69  1   -11.5    -8.4    14.6
                                                  19.2%                 2401 Uberaba---69  2   -11.5    -8.4    14.6
                                                  23.9%                 2408 AltGloria-69  1   -18.1     8.7    20.5
 2366   69  0   1.002     0.0     0.0    15.5     0.0     9.6     0.0
 CentroCur-69   -82.1     0.0     0.0    12.4     0.0     0.0     0.0
                                                  44.2%                 2363 CComprido-69  1   -38.1     0.5    38.0
                                                  41.4%                 2387 Pilarzinh-69  1    22.6    -3.2    22.8
 2367   69  0   0.979     0.0     0.0     5.4     0.0     0.0     0.0
 Chamine---69   -81.6     0.0     0.0     4.0     0.0     0.0     0.0
                                                  59.3%                 2350 Chamine----6  1   -11.6     0.7    11.9 1.072F
                                                  28.4%                 2374 Guaricana-69  1     6.2    -4.7     7.9
CEPEL - CENTRO DE PESQUISAS DE ENERGIA ELETRICA - PROGRAMA DE ANALISE DE REDES - V08MAR05A                              PAG. 284

ANUAL 06/07 * SETEMBRO 2006 PESADA S/SE 19H N/NE 19H * ANAT0 - FSE - C13
```

```
RELATORIO COMPLETO DO SISTEMA * AREA 22 * *        COPEL - SECUNDARIA        *

X----------------- D A D O S  -  B A R R A -------------------------X------------ F L U X O S  -  C I R C U I T O S ------------X
 DA BARRA      TENSAO GERACAO INJ EQV  CARGA   ELO CC  SHUNT    MOTOR
 NUM. KV TIPO   MOD/     MW/     MW/     MW/     MW/   Mvar/     MW/
     NOME       ANG     Mvar    Mvar    Mvar    Mvar   EQUIV    Mvar  PARA BARRA                    FLUXOS
                                                FLUXO % SHUNT L         NUM.     NOME     NC     MW    Mvar  MVA/V_d   TAP  DEFAS TIE
X------------X-------X-------X-------X-------X-------X-------X-------X----X------------X--X-------X-------X-------X------X-----X---X

 2368   69  0   1.000     0.0     0.0     0.0     0.0    30.0     0.0
 CIndustri-69   -82.4     0.0     0.0     0.0     0.0     0.0     0.0
                                                56.6%                 815 CIndustr-230  1   -84.2   -11.1    84.9              21
                                                57.4%                 815 CIndustr-230  2   -85.4   -11.3    86.1              21
                                                59.2%                2358 Barigui---69  1    53.5    10.4    54.5
                                                62.6%                2358 Barigui---69  2    53.5    10.4    54.5
                                                16.5%                2362 CBA057BOS-69  1     6.6     8.9    11.1
                                                 9.8%                2411 CBA085FNH-69  1    -0.4     6.5     6.6
                                                38.4%                2415 NMUNDO----69  1    56.5    16.2    58.8
 2369   69  0   0.986     0.0     0.0    19.7     0.0     4.7     0.0
 Colombo---69   -83.8     0.0     0.0     3.5     0.0     0.0     0.0
                                                15.1%                2396 RBranco---69  1    -4.5     6.3     7.8
                                                10.4%                2414 Guaraitub-69  1    -5.1    -1.8     5.4
                                                20.9%                2478 StaMonica-69  1   -10.2    -3.4    10.9
 2370   69  0   0.997     0.0     0.0     6.0     0.0     0.0     0.0
 ARC064CCL-69   -82.6     0.0     0.0     1.8     0.0     0.0     0.0
                                                 9.4%                2362 CBA057BOS-69  1    -6.0    -1.8     6.3
 2371   69  0   0.997     0.0     0.0    16.3     0.0     0.0     0.0
 ARC065FAF-69   -81.9     0.0     0.0     4.8     0.0     0.0     0.0
                                                15.5%                2402 Umbara-A--69  1    -7.6    -2.5     8.0
                                                17.4%                2406 Umbara-B--69  1    -8.7    -2.3     9.0
 2372   69  0   0.979     0.0     0.0     0.6     0.0     0.0     0.0
 CBA061FON-69   -85.3     0.0     0.0     0.2     0.0     0.0     0.0
                                                27.8%                2386 Parolin---69  1    24.7    -0.5    25.3
                                                22.1%                2397 SQuiteria-69  1   -25.3     0.3    25.9
 2373  138  0   1.029     0.0     0.0     0.0     0.0     0.0     0.0
 GPSouza--138   -74.5     0.0     0.0     0.0     0.0     0.0     0.0
                                                23.0%                 817 GPSouza--230  1   -32.7   -14.0    34.5              21
                                                23.0%                 817 GPSouza--230  2   -32.7   -14.0    34.5              21
                                                20.3%                2383 PFiscal--138  1    24.6    10.4    26.0
                                                18.1%                2384 Paranagu-138  1    23.9     8.3    24.6
                                                14.4%                2410 Guaratub-138  1    18.7     2.0    18.3
                                                22.4%                2433 Morretes-138  1    27.0    11.4    28.5
                                                18.9%                9337 GPSouza--FIC  1   -28.9    -4.1    28.4
 2374   69  0   0.981     0.0     0.0     0.0     0.0     0.0     0.0
 Guaricana-69   -82.3     0.0     0.0     0.0     0.0     0.0     0.0
                                                34.7%                2352 Guaricana--6  1   -13.6     0.3    13.9 1.000F
                                                28.0%                2367 Chamine---69  1    -6.2     4.6     7.8
                                                28.1%                2376 GNA070PET-69  1     7.5     2.0     7.9
                                                18.9%                2397 SQuiteria-69  1     6.1    -3.5     7.2
                                                18.9%                2397 SQuiteria-69  2     6.1    -3.5     7.2
CEPEL - CENTRO DE PESQUISAS DE ENERGIA ELETRICA - PROGRAMA DE ANALISE DE REDES - V08MAR05A                                PAG. 285

ANUAL 06/07 * SETEMBRO 2006 PESADA S/SE 19H N/NE 19H * ANAT0 - FSE - C13
RELATORIO COMPLETO DO SISTEMA * AREA 22 * *        COPEL - SECUNDARIA        *

X----------------- D A D O S  -  B A R R A -------------------------X------------ F L U X O S  -  C I R C U I T O S ------------X
 DA BARRA      TENSAO GERACAO INJ EQV  CARGA   ELO CC  SHUNT    MOTOR
 NUM. KV TIPO   MOD/     MW/     MW/     MW/     MW/   Mvar/     MW/
     NOME       ANG     Mvar    Mvar    Mvar    Mvar   EQUIV    Mvar  PARA BARRA                    FLUXOS
                                                FLUXO % SHUNT L         NUM.     NOME     NC     MW    Mvar  MVA/V_d   TAP  DEFAS TIE
```

```
X------------X-------X-------X-------X-------X-------X-------X-------X----X------------X--X-------X-------X-------X------X-----X---X

 2375  138  0   0.999     0.0     0.0     4.6     0.0     0.0     0.0
 CLG089ITM138   -75.0     0.0     0.0     1.3     0.0     0.0     0.0
                                                9.6%                    2359 Bateias--138  1    -4.6    -1.3     4.8
 2376   69  0   0.968     0.0     0.0     7.4     0.0     0.0     0.0
 GNA070PET-69   -83.2     0.0     0.0     2.2     0.0     0.0     0.0
                                               28.5%                    2374 Guaricana-69  1    -7.4    -2.2     8.0
 2377  230  0   1.011     0.0     0.0    27.1     0.0     0.0     0.0
 RBS011CCP230   -75.8     0.0     0.0     7.9     0.0     0.0     0.0
                                               27.1%                     819 Pilarzin-230  1   -27.1    -7.9    27.9                21
 2378  138  0   0.963     0.0     0.0    20.4     0.0     2.2     0.0
 Lapa-----138   -77.9     0.0     0.0     7.4     0.0     0.0     0.0
                                               66.8%                    2359 Bateias--138  1   -51.6   -16.1    56.1
                                               24.2%                    2389 PIE174TAF138  1    31.2    10.9    34.3
 2379  138  0   1.003     0.0     0.0     9.2     0.0    12.1     0.0
 Matinhos-138   -76.8     0.0     0.0     6.9     0.0     0.0     0.0
                                                2.5%                    2390 PLeste---138  1    -3.3     0.9     3.4
                                                3.7%                    2410 Guaratub-138  1    -5.9     4.2     7.2
 2380   69  0   0.974     0.0     0.0    25.3     0.0     0.0     0.0
 Guatupe---69   -85.9     0.0     0.0    12.8     0.0     0.0     0.0
                                                0.0%                    2382 Morretes--69  1     0.0     0.0     0.0
                                               51.8%                    2401 Uberaba---69  1   -23.9   -16.1    29.6
                                                6.1%                    2430 PIRAQUARA-69  1    -1.4     3.3     3.7
 2381   69  0   0.991     0.0     0.0    49.3     0.0     9.4     0.0
 Merces----69   -82.7     0.0     0.0    32.1     0.0     0.0     0.0
                                               57.5%                    2363 CComprido-69  1   -52.1    -6.1    52.9
                                               25.3%                    2387 Pilarzinh-69  1     2.8   -16.6    17.0
 2382  138  0   1.009     4.0     0.0     9.0     0.0     2.4     0.0
 Morretes--69   -76.4     0.0     0.0     4.1     0.0     0.0     0.0
                                                0.0%                    2380 Guatupe---69  1     0.0     0.0     0.0
                                               26.1%                    2433 Morretes-138  1    -5.0    -1.7     5.2
 2383  138  0   1.003     0.0     0.0    20.0     0.0     0.0     0.0
 PFiscal--138   -76.0     0.0     0.0     7.8     0.0     0.0     0.0
                                               21.4%                    2373 GPSouza--138  1   -24.3   -13.0    27.4
                                               12.5%                    2384 Paranagu-138  1    15.7    -1.7    15.8
                                               12.2%                    2390 PLeste---138  1    16.3    -3.1    16.6
                                                9.5%                    2410 Guaratub-138  1    10.9    -4.9    11.9
                                               10.5%                    2416 Porto----138  1    13.5    -0.1    13.5
                                               19.5%                    2433 Morretes-138  1   -21.7   -12.1    24.8
                                               27.1%                    2459 PFiscal--230  1   -30.5    27.1    40.7
CEPEL - CENTRO DE PESQUISAS DE ENERGIA ELETRICA - PROGRAMA DE ANALISE DE REDES - V08MAR05A                                   PAG. 286

ANUAL 06/07 * SETEMBRO 2006 PESADA S/SE 19H N/NE 19H * ANAT0 - FSE - C13
RELATORIO COMPLETO DO SISTEMA * AREA 22 * *        COPEL - SECUNDARIA        *

X----------------- D A D O S  -  B A R R A -------------------------X------------ F L U X O S  -  C I R C U I T O S ------------X
 DA BARRA      TENSAO GERACAO INJ EQV  CARGA   ELO CC  SHUNT    MOTOR
 NUM. KV TIPO   MOD/     MW/     MW/     MW/     MW/   Mvar/     MW/
     NOME       ANG     Mvar    Mvar    Mvar    Mvar   EQUIV    Mvar  PARA BARRA                    FLUXOS
                                                FLUXO % SHUNT L         NUM.     NOME     NC     MW    Mvar  MVA/V_d   TAP  DEFAS TIE
X------------X-------X-------X-------X-------X-------X-------X-------X----X------------X--X-------X-------X-------X------X-----X---X

 2384  138  0   1.002     0.0     0.0    32.7     0.0    12.7     0.0
 Paranagu-138   -76.2     0.0     0.0    16.2     0.0     0.0     0.0
                                               19.3%                    2373 GPSouza--138  1   -23.6   -11.4    26.2
                                               12.5%                    2383 PFiscal--138  1   -15.7     1.1    15.7
                                                9.7%                    2416 Porto----138  1     6.6     6.8     9.5
 2385   69  0   0.980     0.0     0.0    19.9     0.0     0.0     0.0
 Pinhais---69   -85.5     0.0     0.0     7.6     0.0     0.0     0.0
```

```
                                                  11.2%                 2401 Uberaba---69  1    -6.8    -6.0     9.3
                                                  16.5%                 2407 PNS034HUHD69  1   -13.1    -1.6    13.5
 2386   69  0   0.977     0.0     0.0    36.6     0.0     4.6     0.0
 Parolin---69   -85.8     0.0     0.0    14.1     0.0     0.0     0.0
                                                  27.8%                 2372 CBA061FON-69  1   -24.7     0.6    25.3
                                                  12.9%                 2394 CBA037PLP-69  1   -11.9   -10.2    16.0
 2387   69  0   1.000     0.0     0.0    26.8     0.0    30.0     0.0
 Pilarzinh-69   -82.9     0.0     0.0     9.4     0.0     0.0     0.0
                                                  48.1%                  819 Pilarzin-230  1   -70.7   -14.6    72.2                21
                                                  47.7%                  819 Pilarzin-230  2   -70.0   -14.5    71.5                21
                                                  25.9%                 2356 Atuba-----69  1    21.9     4.4    22.3
                                                  25.9%                 2356 Atuba-----69  2    21.9     4.4    22.3
                                                  52.8%                 2357 Bacacheri-69  1    47.4    10.8    48.6
                                                  53.3%                 2357 Bacacheri-69  2    48.0    10.1    49.0
                                                  41.4%                 2366 CentroCur-69  1   -22.5     3.4    22.8
                                                  25.2%                 2381 Merces----69  1    -2.7    16.6    16.9
 2388   69  0   0.974     0.0     0.0    50.7     0.0     2.3     0.0
 PinheiriA-69   -83.6     0.0     0.0    20.4     0.0     0.0     0.0
                                                   0.0%                 2401 Uberaba---69  1     0.0     0.0     0.0
                                                  65.0%                 2402 Umbara-A--69  1   -50.7   -18.1    55.3
 2389  138  0   0.930     0.0     0.0    30.6     0.0     0.0     0.0
 PIE174TAF138   -80.4     0.0     0.0    12.3     0.0     0.0     0.0
                                                  25.0%                 2378 Lapa-----138  1   -30.6   -12.3    35.5
 2390  138  0   1.001     0.0     0.0    13.0     0.0     2.4     0.0
 PLeste---138   -76.5     0.0     0.0     5.0     0.0     0.0     0.0
                                                   4.1%                 2379 Matinhos-138  1     3.3    -4.5     5.6
                                                  12.0%                 2383 PFiscal--138  1   -16.3     1.9    16.4
 2391  138  0   0.998     0.0     0.0    23.2     0.0     0.0     0.0
 DICLargo-138   -75.1     0.0     0.0     8.1     0.0     0.0     0.0
                                                  28.8%                 2359 Bateias--138  1   -18.5    -5.3    19.3
                                                   8.2%                 2364 CLargo---138  1    -4.7    -2.8     5.5
CEPEL - CENTRO DE PESQUISAS DE ENERGIA ELETRICA - PROGRAMA DE ANALISE DE REDES - V08MAR05A                                PAG. 287

ANUAL 06/07 * SETEMBRO 2006 PESADA S/SE 19H N/NE 19H * ANAT0 - FSE - C13
RELATORIO COMPLETO DO SISTEMA * AREA 22 * *        COPEL - SECUNDARIA        *

X----------------- D A D O S  -  B A R R A ------------------------X------------ F L U X O S  -  C I R C U I T O S ------------X
 DA BARRA      TENSAO GERACAO INJ EQV  CARGA   ELO CC  SHUNT    MOTOR
 NUM. KV TIPO   MOD/     MW/     MW/     MW/     MW/   Mvar/     MW/
     NOME       ANG     Mvar    Mvar    Mvar    Mvar   EQUIV    Mvar  PARA BARRA                    FLUXOS
                                                FLUXO % SHUNT L         NUM.     NOME     NC     MW    Mvar  MVA/V_d   TAP  DEFAS TIE
X------------X-------X-------X-------X-------X-------X-------X-------X----X------------X--X-------X-------X-------X------X-----X---X

 2392   69  0   0.976     0.0     0.0    28.1     0.0     2.3     0.0
 4Barras---69   -84.7     0.0     0.0    14.5     0.0     0.0     0.0
                                                  25.8%                 2430 PIRAQUARA-69  1    15.0     1.4    15.5
                                                  64.4%                 2478 StaMonica-69  1   -43.1   -13.6    46.3
 2393   69  0   1.026     6.0     0.0     0.0     0.0     0.0     0.0
 BAN091RMB-69   -78.2     0.0     0.0     0.0     0.0     0.0     0.0
                                                   9.1%                 2363 CComprido-69  1     6.0     0.0     5.8
 2394   69  0   0.980     0.0     0.0    10.6     0.0     0.0     0.0
 CBA037PLP-69   -85.6     0.0     0.0     3.1     0.0     0.0     0.0
                                                  12.9%                 2386 Parolin---69  1    11.9    10.2    16.0
                                                  19.8%                 2401 Uberaba---69  1   -22.5   -13.3    26.7
 2395   69  0   0.989     0.0     0.0     0.1     0.0     0.0     0.0
 ARC081REP-69   -83.1     0.0     0.0     0.0     0.0     0.0     0.0
                                                   0.8%                 2355 Araucaria-69  1    -0.1     0.0     0.1
 2396   69  0   0.979     0.0     0.0    18.4     0.0     2.3     0.0
 RBranco---69   -83.1     0.0     0.0     9.7     0.0     0.0     0.0
                                                  42.6%                 2363 CComprido-69  1   -22.9    -1.0    23.4
```

```
                                                  15.4%                 2369 Colombo---69  1     4.5    -6.4     8.0
 2397   69  0   0.980     0.0     0.0    37.8     0.0    11.5     0.0
 SQuiteria-69   -84.9     0.0     0.0    11.7     0.0     0.0     0.0
                                                  43.5%                 2358 Barigui---69  1   -36.3    -5.1    37.4
                                                  40.7%                 2358 Barigui---69  2   -36.3    -5.1    37.4
                                                  44.6%                 2360 Batel-----69  1    43.6     6.8    45.0
                                                  22.1%                 2372 CBA061FON-69  1    25.4    -0.2    25.9
                                                  17.9%                 2374 Guaricana-69  1    -6.0     2.9     6.8
                                                  17.9%                 2374 Guaricana-69  2    -6.0     2.9     6.8
                                                  14.8%                 2415 NMUNDO----69  1   -22.1    -2.4    22.7
 2398   69  0   0.971     0.0     0.0    31.0     0.0     4.5     0.0
 SJPinhais-69   -86.4     0.0     0.0    14.4     0.0     0.0     0.0
                                                  30.5%                 2401 Uberaba---69  1   -20.4    -6.3    22.0
                                                  30.5%                 2401 Uberaba---69  2   -20.4    -6.3    22.0
                                                  17.2%                 2409 SJP048PVC-69  1     9.8     2.8    10.5
 2399  230  0   1.038     0.0     0.0    34.8     0.0     0.0     0.0
 ARC043SIG230   -73.1     0.0     0.0    10.1     0.0     0.0     0.0
                                                  29.3%                  821 Umbara-2-230  1   -34.8   -10.1    34.9                21
 2400   69  0   0.982     0.0     0.0    17.2     0.0     4.6     0.0
 Taruma-L1-69   -85.2     0.0     0.0    10.2     0.0     0.0     0.0
                                                  41.9%                 2356 Atuba-----69  1   -33.7    -1.2    34.4
                                                  21.2%                 2407 PNS034HUHD69  1    16.5    -4.4    17.4
CEPEL - CENTRO DE PESQUISAS DE ENERGIA ELETRICA - PROGRAMA DE ANALISE DE REDES - V08MAR05A                                PAG. 288

ANUAL 06/07 * SETEMBRO 2006 PESADA S/SE 19H N/NE 19H * ANAT0 - FSE - C13
RELATORIO COMPLETO DO SISTEMA * AREA 22 * *        COPEL - SECUNDARIA        *

X----------------- D A D O S  -  B A R R A -------------------------X------------ F L U X O S  -  C I R C U I T O S ------------X
 DA BARRA      TENSAO GERACAO INJ EQV  CARGA   ELO CC  SHUNT    MOTOR
 NUM. KV TIPO   MOD/     MW/     MW/     MW/     MW/   Mvar/     MW/
     NOME       ANG     Mvar    Mvar    Mvar    Mvar   EQUIV    Mvar  PARA BARRA                   FLUXOS
                                                FLUXO % SHUNT L         NUM.     NOME     NC     MW    Mvar  MVA/V_d   TAP  DEFAS TIE
X------------X-------X-------X-------X-------X-------X-------X-------X----X------------X--X-------X-------X-------X------X-----X---X

 2401   69  0   0.986     0.0     0.0    44.7     0.0    29.2     0.0
 Uberaba---69   -85.3     0.0     0.0    12.0     0.0     0.0     0.0
                                                  70.5%                  820 Uberaba--230  1   -97.9   -35.7   105.7                21
                                                  71.6%                  820 Uberaba--230  2   -99.5   -36.3   107.4                21
                                                  46.9%                 2361 Boqueirao-69  1    38.6     7.5    39.9
                                                  19.1%                 2365 Capanema--69  1    11.6     8.4    14.5
                                                  19.1%                 2365 Capanema--69  2    11.6     8.4    14.5
                                                  51.8%                 2380 Guatupe---69  1    24.0    16.5    29.5
                                                  11.0%                 2385 Pinhais---69  1     6.8     6.0     9.2
                                                   0.0%                 2388 PinheiriA-69  1     0.0     0.0     0.0
                                                  19.7%                 2394 CBA037PLP-69  1    22.6    13.4    26.6
                                                  30.5%                 2398 SJPinhais-69  1    20.6     6.7    21.9
                                                  30.5%                 2398 SJPinhais-69  2    20.6     6.7    21.9
                                                  17.2%                 2405 Taruma-L2-69  1    -4.9     8.3     9.8
                                                   9.2%                 2407 PNS034HUHD69  1     1.5     7.3     7.6
 2402   69  0   1.000     0.0     0.0     0.0     0.0    30.0     0.0
 Umbara-A--69   -81.7     0.0     0.0     0.0     0.0     0.0     0.0
                                                  56.3%                  821 Umbara-2-230  1   -84.2    -6.5    84.4                21
                                                  23.8%                 2355 Araucaria-69  1    30.8     6.6    31.5
                                                  15.4%                 2371 ARC065FAF-69  1     7.6     2.4     8.0
                                                  65.0%                 2388 PinheiriA-69  1    51.4    20.1    55.2
                                                  17.8%                 2403 CBA056WMA-69  1    11.4    -3.4    11.9
                                                  33.2%                 2406 Umbara-B--69  1   -63.1     0.0    63.1
                                                  21.4%                 2412 Tatu+Furu-69  1    15.9     8.9    18.2
                                                  23.4%                 2462 ARC082PCG-69  1    30.1     6.7    30.9
                                                   6.9%                 9388 PinheiriB-69  1     0.0    -4.9     4.9
```

```
 2403   69  0   0.999     0.0     0.0     0.0     0.0     0.0     0.0
 CBA056WMA-69   -82.3     0.0     0.0     0.0     0.0     0.0     0.0
                                                17.7%                 2402 Umbara-A--69  1   -11.4     3.4    11.9
                                                17.7%                 2411 CBA085FNH-69  1    11.4    -3.4    11.9
 2404   69  0   0.981     0.0     0.0     6.2     0.0     0.0     0.0
 ARC079BEK-69   -83.8     0.0     0.0     1.8     0.0     0.0     0.0
                                                11.5%                 2358 Barigui---69  1     2.3    -5.7     6.3
                                                17.1%                 2427 TOMAZCOEL-69  1    -8.5     3.9     9.6
 2405   69  0   0.982     0.0     0.0    24.8     0.0     4.6     0.0
 Taruma-L2-69   -85.0     0.0     0.0    15.3     0.0     0.0     0.0
                                                37.1%                 2356 Atuba-----69  1   -29.8    -2.3    30.4
                                                17.3%                 2401 Uberaba---69  1     5.0    -8.4     9.9
CEPEL - CENTRO DE PESQUISAS DE ENERGIA ELETRICA - PROGRAMA DE ANALISE DE REDES - V08MAR05A                                PAG. 289

ANUAL 06/07 * SETEMBRO 2006 PESADA S/SE 19H N/NE 19H * ANAT0 - FSE - C13
RELATORIO COMPLETO DO SISTEMA * AREA 22 * *        COPEL - SECUNDARIA        *

X----------------- D A D O S  -  B A R R A -------------------------X------------ F L U X O S  -  C I R C U I T O S ------------X
 DA BARRA      TENSAO GERACAO INJ EQV  CARGA   ELO CC  SHUNT    MOTOR
 NUM. KV TIPO   MOD/     MW/     MW/     MW/     MW/   Mvar/     MW/
     NOME       ANG     Mvar    Mvar    Mvar    Mvar   EQUIV    Mvar  PARA BARRA                    FLUXOS
                                                FLUXO % SHUNT L         NUM.     NOME     NC     MW    Mvar  MVA/V_d   TAP  DEFAS TIE
X------------X-------X-------X-------X-------X-------X-------X-------X----X------------X--X-------X-------X-------X------X-----X---X

 2406   69  0   1.000     0.0     0.0     0.0     0.0     0.0     0.0
 Umbara-B--69   -81.7     0.0     0.0     0.0     0.0     0.0     0.0
                                                56.6%                  822 Umbara-1-230  1   -84.8     0.9    84.8               21
                                                20.0%                 2362 CBA057BOS-69  1    13.0    -3.3    13.4
                                                17.3%                 2371 ARC065FAF-69  1     8.7     2.3     9.0
                                                33.2%                 2402 Umbara-A--69  1    63.1     0.0    63.1
 2407   69  0   0.982     0.0     0.0     4.8     0.0     0.0     0.0
 PNS034HUHD69   -85.2     0.0     0.0     1.4     0.0     0.0     0.0
                                                16.5%                 2385 Pinhais---69  1    13.2     1.5    13.5
                                                21.2%                 2400 Taruma-L1-69  1   -16.5     4.4    17.4
                                                 9.3%                 2401 Uberaba---69  1    -1.4    -7.4     7.6
 2408   69  0   0.976     0.0     0.0    46.8     0.0     0.0     0.0
 AltGloria-69   -85.4     0.0     0.0    21.7     0.0     0.0     0.0
                                                50.2%                 2357 Bacacheri-69  1   -64.9   -13.1    67.8
                                                23.9%                 2365 Capanema--69  1    18.1    -8.6    20.6
 2409   69  0   0.962     0.0     0.0     9.7     0.0     0.0     0.0
 SJP048PVC-69   -86.7     0.0     0.0     2.8     0.0     0.0     0.0
                                                17.2%                 2398 SJPinhais-69  1    -9.7    -2.8    10.5
 2410  138  0   1.003     0.0     0.0    23.4     0.0     4.8     0.0
 Guaratub-138   -76.7     0.0     0.0    15.2     0.0     0.0     0.0
                                                15.7%                 2373 GPSouza--138  1   -18.4    -7.7    19.9
                                                 3.9%                 2379 Matinhos-138  1     5.9    -4.9     7.6
                                                 8.9%                 2383 PFiscal--138  1   -10.9     2.2    11.1
 2411   69  0   0.999     0.0     0.0    11.0     0.0     0.0     0.0
 CBA085FNH-69   -82.4     0.0     0.0     3.2     0.0     0.0     0.0
                                                 9.8%                 2368 CIndustri-69  1     0.4    -6.5     6.6
                                                17.7%                 2403 CBA056WMA-69  1   -11.4     3.3    11.9
 2412   69  0   0.992     0.0     0.0    15.8     0.0     4.7     0.0
 Tatu+Furu-69   -82.1     0.0     0.0    13.5     0.0     0.0     0.0
                                                 0.0%                 2361 Boqueirao-69  1     0.0     0.0     0.0
                                                21.4%                 2402 Umbara-A--69  1   -15.8    -8.8    18.2
 2414   69  0   0.991     0.0     0.0    15.3     0.0     0.0     0.0
 Guaraitub-69   -83.5     0.0     0.0     5.5     0.0     0.0     0.0
                                                10.3%                 2369 Colombo---69  1     5.1     1.6     5.4
                                                27.6%                 2478 StaMonica-69  1   -20.4    -7.1    21.8
 2415   69  0   0.984     0.0     0.0    33.9     0.0     0.0     0.0
```

```
 NMUNDO----69   -84.2     0.0     0.0    11.8     0.0     0.0     0.0
                                             38.4%                 2368 CIndustri-69  1   -56.1   -14.4    58.8
                                             14.8%                 2397 SQuiteria-69  1    22.2     2.6    22.7
CEPEL - CENTRO DE PESQUISAS DE ENERGIA ELETRICA - PROGRAMA DE ANALISE DE REDES - V08MAR05A                                PAG. 290

ANUAL 06/07 * SETEMBRO 2006 PESADA S/SE 19H N/NE 19H * ANAT0 - FSE - C13
RELATORIO COMPLETO DO SISTEMA * AREA 22 * *        COPEL - SECUNDARIA        *

X----------------- D A D O S  -  B A R R A -------------------------X------------ F L U X O S  -  C I R C U I T O S ------------X
 DA BARRA      TENSAO GERACAO INJ EQV  CARGA   ELO CC  SHUNT    MOTOR
 NUM. KV TIPO   MOD/     MW/     MW/     MW/     MW/   Mvar/     MW/
     NOME       ANG     Mvar    Mvar    Mvar    Mvar   EQUIV    Mvar  PARA BARRA                    FLUXOS
                                                FLUXO % SHUNT L         NUM.     NOME     NC     MW    Mvar  MVA/V_d   TAP  DEFAS TIE
X------------X-------X-------X-------X-------X-------X-------X-------X----X------------X--X-------X-------X-------X------X-----X---X

 2416  138  0   1.001     0.0     0.0    20.1     0.0     0.0     0.0
 Porto----138   -76.2     0.0     0.0     7.9     0.0     0.0     0.0
                                             10.5%                 2383 PFiscal--138  1   -13.5    -0.8    13.5
                                              9.9%                 2384 Paranagu-138  1    -6.6    -7.1     9.7
 2417  138  0   1.005     0.0     0.0    17.1     0.0     0.0     0.0
 Belem----138   -74.0     0.0     0.0     7.9     0.0     0.0     0.0
                                             16.9%                  830 PGrossaN-138  1   -25.4     1.1    25.2
                                             11.0%                 2437 PGrossaS-138  1     8.3    -9.0    12.1
 2418  138  0   0.992     0.0     0.0    28.5     0.0     4.7     0.0
 Castro---138   -74.9     0.0     0.0    12.8     0.0     0.0     0.0
                                             59.7%                 2439 CTO215BTV138  1   -28.5    -8.1    29.9
 2420   69  0   1.000     0.0     0.0     0.0     0.0     0.0     0.0
 Guarapuav-69   -54.1     0.0     0.0     0.0     0.0     0.0     0.0
                                             10.1%                  825 Guarapua-138  1    -3.1    -0.5     3.1
                                              5.9%                 2446 GVA341CAE-69  1     3.1     0.5     3.1
 2421  138  0   0.989     0.0     0.0    32.8     0.0     0.0     0.0
 ATI261INP138   -82.6     0.0     0.0     9.6     0.0     0.0     0.0
                                             23.3%                 2423 Jaguaria-138  1   -32.8    -9.6    34.5
 2422   69  0   1.016     0.0     0.0     4.0     0.0     0.0     0.0
 CBA063VVO-69   -79.4     0.0     0.0     1.2     0.0     0.0     0.0
                                              0.0%                 2358 Barigui---69  2     0.0     0.0     0.0
                                              4.5%                 2363 CComprido-69  2    -4.0    -1.2     4.1
 2423  138  0   1.000     0.0     0.0     0.0     0.0    30.0     0.0
 Jaguaria-138   -81.7     0.0     0.0     0.0     0.0     0.0     0.0
                                             49.6%                  827 Jaguaria-230  1   -73.1   -13.7    74.4              21
                                             49.8%                  827 Jaguaria-230  2   -73.4   -13.8    74.7              21
                                             23.1%                 2421 ATI261INP138  1    33.0     8.8    34.2
                                             61.1%                 2426 JGI262PSS138  1    82.1    24.0    85.5
                                             90.4%                 2435 Jaguariai-34  1    10.7    14.6    18.1 0.902*
                                              8.0%                 2440 JGI265PLP138  1    10.8     2.8    11.2
                                             61.6%                 9323 Jaguariai-13  1     9.9     7.3    12.3 0.947*
 2424  230  0   1.025     0.0     0.0    14.0     0.0     0.0     0.0
 SMS211XIS230   -69.3     0.0     0.0     4.1     0.0     0.0     0.0
                                             13.8%                  834 SMateus--230  1   -14.0    -4.1    14.2              21
 2425   69  0   1.022     0.0     0.0    37.0     0.0     0.0     0.0
 TEL363KLA-69   -86.4     0.0     0.0    10.8     0.0     0.0     0.0
                                             39.7%                 2432 TelBorba--69  1   -37.0   -10.8    37.7
CEPEL - CENTRO DE PESQUISAS DE ENERGIA ELETRICA - PROGRAMA DE ANALISE DE REDES - V08MAR05A                                PAG. 291

ANUAL 06/07 * SETEMBRO 2006 PESADA S/SE 19H N/NE 19H * ANAT0 - FSE - C13
RELATORIO COMPLETO DO SISTEMA * AREA 22 * *        COPEL - SECUNDARIA        *

X----------------- D A D O S  -  B A R R A -------------------------X------------ F L U X O S  -  C I R C U I T O S ------------X
 DA BARRA      TENSAO GERACAO INJ EQV  CARGA   ELO CC  SHUNT    MOTOR
 NUM. KV TIPO   MOD/     MW/     MW/     MW/     MW/   Mvar/     MW/
```

```
     NOME       ANG     Mvar    Mvar    Mvar    Mvar   EQUIV    Mvar  PARA BARRA                    FLUXOS
                                               FLUXO % SHUNT L         NUM.     NOME     NC     MW    Mvar  MVA/V_d   TAP  DEFAS TIE
X------------X-------X-------X-------X-------X-------X-------X-------X----X------------X--X-------X-------X-------X------X-----X---X

 2426  138  0   0.998     0.0     0.0    82.0     0.0     0.0     0.0
 JGI262PSS138   -81.9     0.0     0.0    23.9     0.0     0.0     0.0
                                          61.1%                  2423 Jaguaria-138  1   -82.0   -23.9    85.6
 2427    1  0   0.981     0.0     0.0    21.8     0.0     0.0     0.0
 TOMAZCOEL-69   -83.8     0.0     0.0     8.7     0.0     0.0     0.0
                                          55.9%                  2355 Araucaria-69  1   -30.4    -4.7    31.3
                                          17.2%                  2404 ARC079BEK-69  1     8.6    -4.0     9.6
 2428   69  0   0.923     0.0     0.0     9.6     0.0     0.0     0.0
 Senges----69   -90.1     0.0     0.0     4.4     0.0     0.0     0.0
                                          67.3%                  2434 Jaguariai-69  1    -9.6    -4.4    11.4
 2429  138  0   0.943     0.0     0.0    18.7     0.0     2.1     0.0
 SiCampos-138   -79.8     0.0     0.0    18.3     0.0     0.0     0.0
                                          53.5%                  2485 Figueira-138  1   -18.7   -16.2    26.2
 2430   69  0   0.968     0.0     0.0    13.5     0.0     0.0     0.0
 PIRAQUARA-69   -85.7     0.0     0.0     4.8     0.0     0.0     0.0
                                           6.5%                  2380 Guatupe---69  1     1.4    -3.5     3.9
                                          25.8%                  2392 4Barras---69  1   -14.9    -1.3    15.5
 2431  138  0   0.974     0.0     0.0    32.4     0.0     0.0     0.0
 TelBorba-138   -82.2     0.0     0.0     9.6     0.0     0.0     0.0
                                          39.6%                  2432 TelBorba--69  1    12.0   -10.3    16.2 1.000S
                                          41.9%                  2432 TelBorba--69  2    12.7   -10.9    17.2 1.000S
                                          41.4%                  2432 TelBorba--69  3    12.5   -10.8    17.0 1.000S
                                          37.0%                  2485 Figueira-138  1   -31.9    12.4    35.2
                                          29.4%                  2485 Figueira-138  2   -37.6    10.1    40.0
 2432   69  0   1.029     0.0     0.0     0.0     0.0    47.5     0.0
 TelBorba--69   -85.6     0.0     0.0     0.0     0.0     0.0     0.0
                                          39.7%                  2425 TEL363KLA-69  1    37.1    11.3    37.7
                                          39.6%                  2431 TelBorba-138  1   -12.0    11.7    16.2
                                          41.9%                  2431 TelBorba-138  2   -12.7    12.3    17.2
                                          41.4%                  2431 TelBorba-138  3   -12.5    12.2    17.0
 2433  138  0   1.015     0.0     0.0     0.0     0.0     0.0     0.0
 Morretes-138   -75.4     0.0     0.0     0.0     0.0     0.0     0.0
                                          23.0%                  2373 GPSouza--138  1   -26.8   -12.6    29.2
                                          26.1%                  2382 Morretes--69  1     5.0     1.8     5.2 1.000S
                                          18.9%                  2383 PFiscal--138  1    21.8    10.8    24.0
 2434   69  0   0.979     0.0     0.0     0.0     0.0     0.0     0.0
 Jaguariai-69   -89.1     0.0     0.0     0.0     0.0     0.0     0.0
                                          66.3%                  2428 Senges----69  1    10.1     4.4    11.3
                                          94.0%                  2435 Jaguariai-34  1   -10.1    -4.4    11.3 1.000F
CEPEL - CENTRO DE PESQUISAS DE ENERGIA ELETRICA - PROGRAMA DE ANALISE DE REDES - V08MAR05A                                PAG. 292

ANUAL 06/07 * SETEMBRO 2006 PESADA S/SE 19H N/NE 19H * ANAT0 - FSE - C13
RELATORIO COMPLETO DO SISTEMA * AREA 22 * *        COPEL - SECUNDARIA        *

X----------------- D A D O S  -  B A R R A -------------------------X------------ F L U X O S  -  C I R C U I T O S ------------X
 DA BARRA      TENSAO GERACAO INJ EQV  CARGA   ELO CC  SHUNT    MOTOR
 NUM. KV TIPO   MOD/     MW/     MW/     MW/     MW/   Mvar/     MW/
     NOME       ANG     Mvar    Mvar    Mvar    Mvar   EQUIV    Mvar  PARA BARRA                    FLUXOS
                                               FLUXO % SHUNT L         NUM.     NOME     NC     MW    Mvar  MVA/V_d   TAP  DEFAS TIE
X------------X-------X-------X-------X-------X-------X-------X-------X----X------------X--X-------X-------X-------X------X-----X---X

 2435   23  0   1.001    12.0     0.0    12.6     0.0     0.0     0.0
 Jaguariai-34   -86.4     0.0     0.0     7.3     0.0     0.0     0.0
                                          81.5%                  2423 Jaguaria-138  1   -10.7   -12.3    16.3
                                          94.0%                  2434 Jaguariai-69  1    10.1     5.0    11.3
 2436  138  0   1.000     0.0     0.0    12.7     0.0     0.0     0.0
```

```
 Palmeira-138   -74.7     0.0     0.0     6.0     0.0     0.0     0.0
                                                12.8%                 9437 PGO178MAS138  1   -12.7    -6.0    14.1
 2437  138  0   1.007     0.0     0.0     0.0     0.0     0.0     0.0
 PGrossaS-138   -74.2     0.0     0.0     0.0     0.0     0.0     0.0
                                                20.8%                  831 PGrossaS-230  1   -12.3    -9.8    15.6                21
                                                24.6%                  831 PGrossaS-230  2    -9.7    -7.7    12.3                21
                                                10.6%                 2417 Belem----138  1    -8.2     8.3    11.6
                                                28.5%                 9437 PGO178MAS138  1    30.3     9.2    31.4
 2439  138  0   1.000     0.0     0.0     6.1     0.0     0.0     0.0
 CTO215BTV138   -74.2     0.0     0.0     1.8     0.0     0.0     0.0
                                                32.7%                  830 PGrossaN-138  1   -34.7    -9.2    35.9
                                                59.2%                 2418 Castro---138  1    28.6     7.4    29.6
 2440  138  0   0.999     0.0     0.0    10.8     0.0     0.0     0.0
 JGI265PLP138   -81.8     0.0     0.0     3.2     0.0     0.0     0.0
                                                 8.1%                 2423 Jaguaria-138  1   -10.8    -3.2    11.3
 2442  138  0   0.988     2.5     0.0     8.0     0.0     2.3     0.0
 Clevelan-138   -59.5     0.0     0.0     2.3     0.0     0.0     0.0
                                                46.8%                  853 PBranco--138  1   -21.9    -5.8    22.9
                                                14.7%                 2443 PALMAS---138  1    16.4     5.8    17.6
 2443  138  0   0.976     0.0     0.0    16.3     0.0     0.0     0.0
 PALMAS---138   -60.4     0.0     0.0     7.9     0.0     0.0     0.0
                                                15.5%                 2442 Clevelan-138  1   -16.3    -7.9    18.6
 2446   69  0   0.997     0.0     0.0     3.1     0.0     0.0     0.0
 GVA341CAE-69   -54.3     0.0     0.0     0.9     0.0     0.0     0.0
                                                 6.0%                 2420 Guarapuav-69  1    -3.1    -0.7     3.2
                                                 0.4%                 2449 GVA344MSM-69  1     0.0    -0.2     0.2
 2448  138  0   0.993     0.9     0.0    17.4     0.0     2.4     0.0
 Laranjeir138   -51.6     0.0     0.0    14.3     0.0     0.0     0.0
                                                54.6%                 2452 QIguacu--138  1    22.3   -14.4    26.7
                                                32.7%                 2454 CSegredo-138  1   -38.9     2.4    39.2
 2449   69  0   0.997     0.0     0.0     0.0     0.0     0.0     0.0
 GVA344MSM-69   -54.3     0.0     0.0     0.0     0.0     0.0     0.0
                                                 0.0%                 2446 GVA341CAE-69  1     0.0     0.0     0.0
CEPEL - CENTRO DE PESQUISAS DE ENERGIA ELETRICA - PROGRAMA DE ANALISE DE REDES - V08MAR05A                                PAG. 293

ANUAL 06/07 * SETEMBRO 2006 PESADA S/SE 19H N/NE 19H * ANAT0 - FSE - C13
RELATORIO COMPLETO DO SISTEMA * AREA 22 * *        COPEL - SECUNDARIA        *

X----------------- D A D O S  -  B A R R A -------------------------X------------ F L U X O S  -  C I R C U I T O S ------------X
 DA BARRA       TENSAO GERACAO INJ EQV  CARGA   ELO CC  SHUNT    MOTOR
 NUM. KV TIPO    MOD/     MW/     MW/     MW/     MW/   Mvar/     MW/
     NOME        ANG     Mvar    Mvar    Mvar    Mvar   EQUIV    Mvar  PARA BARRA                    FLUXOS
                                                FLUXO % SHUNT L         NUM.     NOME     NC     MW    Mvar  MVA/V_d   TAP  DEFAS TIE
X------------X-------X-------X-------X-------X-------X-------X-------X----X------------X--X-------X-------X-------X------X-----X---X

 2450  138  0   0.880     0.0     0.0    14.3     0.0     0.0     0.0
 Portal---138   -66.3     0.0     0.0     7.0     0.0     0.0     0.0
                                                 7.0%                  858 VYolanda-138  1   -14.3    -7.0    18.1
 2451   69  0   1.035     0.0     0.0     0.0     0.0     0.0     0.0
 Pinheiros-69   -61.3     0.0     0.0     0.0     0.0     0.0     0.0
                                                68.5%                  854 Pinheiro-138  1   -13.1     5.4    13.7
                                                44.2%                 2456 Ubirata---69  1    13.1    -5.4    13.7
 2452  138  0   1.001     0.0     0.0    13.3     0.0     4.8     0.0
 QIguacu--138   -53.9     0.0     0.0     6.3     0.0     0.0     0.0
                                                13.1%                  848 FChopim--138  1     8.7   -13.1    15.7
                                                50.7%                 2448 Laranjeir138  1   -22.0    11.7    24.9
 2453  138  0   1.007     0.0     0.0    14.2     0.0     0.0     0.0
 TDO833FGB138   -60.6     0.0     0.0     4.1     0.0     0.0     0.0
                                                30.1%                  854 Pinheiro-138  1   -30.4     3.7    30.4
                                                17.7%                  857 Toledo---138  1    16.2    -7.8    17.8
```

```
 2454  138  0   1.007     5.8     0.0    12.8     0.0     2.4     0.0
 CSegredo-138   -48.3     0.0     0.0     5.4     0.0     0.0     0.0
                                              60.9%                 823 Areia----138  1    80.1   -35.7    87.1
                                              32.9%                2448 Laranjeir138  1    39.6    -3.7    39.5
                                              57.9%                2476 Fundao---138  1  -126.6    36.4   130.9                39
 2455   69  0   1.001     0.0     0.0     0.0     0.0     0.0     0.0
 SOsorio-Y-69   -49.8     0.0     0.0     0.0     0.0     0.0     0.0
                                               1.6%                1048 SOsorio---69  1    -0.2     0.8     0.8                20
                                               1.6%                1061 SSantiago-69  1     0.2    -0.8     0.8                20
 2456   69  0   0.984     0.6     0.0    13.7     0.0     4.7     0.0
 Ubirata---69   -69.1     0.0     0.0     3.7     0.0     0.0     0.0
                                              42.8%                2451 Pinheiros-69  1   -11.7     5.7    13.3
                                               7.4%                2469 Mambore---69  1    -1.0    -1.8     2.1
                                               5.1%                2469 Mambore---69  2    -0.4    -3.0     3.0
 2457  138  0   1.017     0.0     0.0    31.0     0.0     0.0     0.0
 Olimpico-138   -58.5     0.0     0.0    13.5     0.0     0.0     0.0
                                              34.7%                 840 Cascavel-138  1   -45.5    -8.3    45.4
                                              11.5%                 854 Pinheiro-138  1    14.5    -5.2    15.1
 2459  230  0   1.029     0.0     0.0     0.0     0.0     0.0     0.0
 PFiscal--230   -74.9     0.0     0.0     0.0     0.0     0.0     0.0
                                              24.3%                 817 GPSouza--230  1   -40.3     7.6    39.8                21
                                              12.5%                 820 Uberaba--230  1     9.7    18.4    20.3                21
                                              26.0%                2383 PFiscal--138  1    30.5   -26.0    39.0 1.043S
CEPEL - CENTRO DE PESQUISAS DE ENERGIA ELETRICA - PROGRAMA DE ANALISE DE REDES - V08MAR05A                                PAG. 294

ANUAL 06/07 * SETEMBRO 2006 PESADA S/SE 19H N/NE 19H * ANAT0 - FSE - C13
RELATORIO COMPLETO DO SISTEMA * AREA 22 * *        COPEL - SECUNDARIA        *

X----------------- D A D O S  -  B A R R A ------------------------X------------ F L U X O S  -  C I R C U I T O S ------------X
 DA BARRA      TENSAO GERACAO INJ EQV  CARGA   ELO CC  SHUNT    MOTOR
 NUM. KV TIPO   MOD/     MW/     MW/     MW/     MW/   Mvar/     MW/
     NOME       ANG     Mvar    Mvar    Mvar    Mvar   EQUIV    Mvar  PARA BARRA                    FLUXOS
                                                FLUXO % SHUNT L         NUM.     NOME     NC     MW    Mvar  MVA/V_d   TAP  DEFAS TIE
X------------X-------X-------X-------X-------X-------X-------X-------X----X------------X--X-------X-------X-------X------X-----X---X

 2460  138  0   0.987    10.0     0.0     4.5     0.0     0.0     0.0
 AAlegre--138   -73.4     0.0     0.0     1.3     0.0     0.0     0.0
                                              13.2%                2468 Colorado-138  1    14.1     1.7    14.4
                                               6.7%                2484 Astorga--138  1    -8.6    -3.0     9.2
 2461   69  0   1.003    14.0     0.0     0.0     0.0     0.0     0.0
 SNATAL---GER   -67.8     0.0     0.0     0.0     0.0     0.0     0.0
                                              31.0%                2471 Mourao----69  1    14.0     0.0    14.0
 2462   69  0   0.993     0.0     0.0     8.8     0.0     0.0     0.0
 ARC082PCG-69   -82.6     0.0     0.0     2.5     0.0     0.0     0.0
                                              23.6%                2355 Araucaria-69  1    21.2     3.8    21.7
                                              23.4%                2402 Umbara-A--69  1   -30.0    -6.3    30.9
 2463  138  0   1.009     0.0     0.0     6.3     0.0     0.0     0.0
 Copacol--138   -61.1     0.0     0.0     1.8     0.0     0.0     0.0
                                              29.2%                 838 AChateau-138  1    37.1    -6.6    37.4
                                              34.1%                 854 Pinheiro-138  1   -43.4     4.8    43.3
 2464    1  0   0.984     5.3     0.0     5.2     0.0     0.0     0.0
 Mourao-----2   -68.2     0.0     0.0     1.6     0.0     0.0     0.0
                                              18.1%                2471 Mourao----69  1     0.1    -1.6     1.6
 2465  138  0   0.973     0.0     0.0    12.3     0.0     2.3     0.0
 Altonia--138   -70.6     0.0     0.0     3.7     0.0     0.0     0.0
                                              26.5%                 874 Umuarama-138  1   -12.3    -1.4    12.7
 2466   69  0   0.952     0.0     0.0     9.8     0.0     0.0     0.0
 BarFerraz-69   -70.2     0.0     0.0     2.2     0.0     0.0     0.0
                                              37.7%                2471 Mourao----69  1    -9.8    -2.2    10.6
 2467   69  0   1.000     0.0     0.0     0.0     0.0     0.0     0.0
```

```
 CMourao---69   -68.3     0.0     0.0     0.0     0.0     0.0     0.0
                                                 9.5%                 860 CMourao--138  1     1.6    -1.2     2.0
                                                 4.6%                2471 Mourao----69  1    -1.6     1.2     2.0
 2468  138  0   0.978     0.0     0.0    14.0     0.0     2.3     0.0
 Colorado-138   -74.3     0.0     0.0     6.7     0.0     0.0     0.0
                                                13.8%                2460 AAlegre--138  1   -14.0    -4.4    15.0
 2469   69  0   1.000     0.0     0.0     0.0     0.0     0.0     0.0
 Mambore---69   -69.2     0.0     0.0     0.0     0.0     0.0     0.0
                                                25.9%                 866 Mambore--138  1     0.8    -5.1     5.2
                                                 4.9%                2456 Ubirata---69  1     1.0     0.9     1.4
                                                 3.6%                2456 Ubirata---69  2     0.4     2.1     2.2
                                                14.3%                2471 Mourao----69  1    -2.2     2.0     3.0
CEPEL - CENTRO DE PESQUISAS DE ENERGIA ELETRICA - PROGRAMA DE ANALISE DE REDES - V08MAR05A                                PAG. 295

ANUAL 06/07 * SETEMBRO 2006 PESADA S/SE 19H N/NE 19H * ANAT0 - FSE - C13
RELATORIO COMPLETO DO SISTEMA * AREA 22 * *        COPEL - SECUNDARIA        *

X----------------- D A D O S  -  B A R R A -------------------------X------------ F L U X O S  -  C I R C U I T O S ------------X
 DA BARRA      TENSAO GERACAO INJ EQV  CARGA   ELO CC  SHUNT    MOTOR
 NUM. KV TIPO   MOD/     MW/     MW/     MW/     MW/   Mvar/     MW/
     NOME       ANG     Mvar    Mvar    Mvar    Mvar   EQUIV    Mvar  PARA BARRA                    FLUXOS
                                                FLUXO % SHUNT L        NUM.     NOME     NC     MW    Mvar  MVA/V_d   TAP  DEFAS TIE
X------------X-------X-------X-------X-------X-------X-------X-------X----X------------X--X-------X-------X-------X------X-----X---X

 2470  138  0   1.001     0.0     0.0     0.0     0.0     0.0     0.0
 Maringa3-138   -72.1     0.0     0.0     0.0     0.0     0.0     0.0
                                                15.5%                 864 JAlvorad-138  1    14.6     7.8    16.6
                                                37.0%                 869 Maringa--138  1   -40.3   -12.5    42.1
                                                20.2%                2484 Astorga--138  1    25.7     4.7    26.1
 2471   69  0   0.999     0.0     0.0     0.0     0.0     0.0     0.0
 Mourao----69   -68.2     0.0     0.0     0.0     0.0     0.0     0.0
                                                31.0%                2461 SNATAL---GER  1   -13.9     0.0    14.0
                                                18.1%                2464 Mourao-----2  1    -0.1     1.6     1.6 1.000F
                                                37.3%                2466 BarFerraz-69  1    10.2     2.2    10.4
                                                 4.8%                2467 CMourao---69  1     1.6    -1.3     2.1
                                                16.0%                2469 Mambore---69  1     2.2    -2.5     3.4
 2472  138  0   1.000     0.0     0.0     0.0     0.0     0.0     0.0
 Sarandi--138   -71.5     0.0     0.0     0.0     0.0     0.0     0.0
                                                14.5%                 867 Mandagua-138  1    11.6    -8.7    14.5
                                                42.6%                 872 Sarandi--230  1   -58.2    26.5    63.9              21
                                                12.6%                 899 Horizont-138  1    15.7   -13.6    20.8
                                                31.1%                2473 JTropica-138  1    30.8    -4.2    31.1
 2473  138  0   0.997     0.0     0.0    21.1     0.0     0.0     0.0
 JTropica-138   -72.0     0.0     0.0     8.2     0.0     0.0     0.0
                                                14.7%                 864 JAlvorad-138  1     9.6   -11.9    15.3
                                                31.0%                2472 Sarandi--138  1   -30.7     3.7    31.0
 2478   69  0   1.000     0.0     0.0     0.0     0.0     0.0     0.0
 StaMonica-69   -82.9     0.0     0.0     0.0     0.0     0.0     0.0
                                                37.0%                2356 Atuba-----69  1    28.9     4.2    29.2
                                                33.9%                2356 Atuba-----69  2    26.6     3.1    26.8
                                                20.7%                2369 Colombo---69  1    10.3     3.2    10.8
                                                64.3%                2392 4Barras---69  1    43.7    15.1    46.3
                                                27.3%                2414 Guaraitub-69  1    20.5     6.7    21.6
                                                44.7%                2477 StaMonica230  1   -65.0   -16.2    67.0              21
                                                44.7%                2477 StaMonica230  2   -65.0   -16.2    67.0              21
 2480  138  0   0.995     0.0     0.0    14.9     0.0     0.0     0.0
 ASSAI----138   -70.3     0.0     0.0     5.8     0.0     0.0     0.0
                                                13.4%                 887 Ibipora--138  1   -14.9    -5.8    16.1
 2481    1  0   0.978     8.0     0.0     0.0     0.0     0.0     0.0
 Figueira---6   -77.6     0.0     0.0     0.0     0.0     0.0     0.0
```

```
                                                  16.7%                 2485 Figueira-138  1     8.0     0.0     8.2
 2483  138  0   1.011     0.0     0.0    40.1     0.0     4.9     0.0
 Araponga-138   -71.6     0.0     0.0    19.3     0.0     0.0     0.0
                                                  49.8%                  879 Apucaran-138  1   -44.4   -41.1    59.8
                                                  22.3%                 2488 ROLANDIA-138  1     4.3    26.7    26.7
CEPEL - CENTRO DE PESQUISAS DE ENERGIA ELETRICA - PROGRAMA DE ANALISE DE REDES - V08MAR05A                          PAG. 296

ANUAL 06/07 * SETEMBRO 2006 PESADA S/SE 19H N/NE 19H * ANAT0 - FSE - C13
RELATORIO COMPLETO DO SISTEMA * AREA 22 * *        COPEL - SECUNDARIA        *

X----------------- D A D O S  -  B A R R A -------------------------X------------ F L U X O S  -  C I R C U I T O S ------------X
 DA BARRA      TENSAO GERACAO INJ EQV  CARGA   ELO CC  SHUNT    MOTOR
 NUM. KV TIPO   MOD/     MW/     MW/    MW/     MW/   Mvar/     MW/
     NOME       ANG     Mvar    Mvar   Mvar    Mvar   EQUIV    Mvar  PARA BARRA                    FLUXOS
                                                FLUXO % SHUNT L         NUM.     NOME     NC     MW    Mvar  MVA/V_d   TAP  DEFAS TIE
X------------X-------X-------X-------X-------X-------X-------X-------X----X------------X--X-------X-------X-------X------X-----X---X

 2484  138  0   0.989     0.0     0.0    16.9     0.0     2.3     0.0
 Astorga--138   -73.3     0.0     0.0     6.3     0.0     0.0     0.0
                                                   6.5%                 2460 AAlegre--138  1     8.6     2.2     9.0
                                                  20.5%                 2470 Maringa3-138  1   -25.5    -6.1    26.5
 2485  138  0   0.978     0.0     0.0     0.0     0.0     0.0     0.0
 Figueira-138   -78.4     0.0     0.0     0.0     0.0     0.0     0.0
                                                  33.2%                  884 Figueira-230  2   -48.5     3.6    49.7              21
                                                  48.8%                 2429 SiCampos-138  1    19.0    13.6    23.9
                                                  38.5%                 2431 TelBorba-138  1    32.9   -13.9    36.6
                                                  30.2%                 2431 TelBorba-138  2    38.5   -11.5    41.1
                                                  16.7%                 2481 Figueira---6  1    -8.0     0.1     8.2 1.000F
                                                  23.8%                 9333 Figueira-FIC  1   -33.9     8.2    35.7
 2486  138  0   0.997     0.0     0.0    34.4     0.0     4.8     0.0
 JBandeir-138   -70.8     0.0     0.0    19.1     0.0     0.0     0.0
                                                  76.3%                  890 Londrina-138  1   -34.4   -14.3    37.4
 2488  138  0   1.003     0.0     0.0    29.0     0.0     0.0     0.0
 ROLANDIA-138   -71.5     0.0     0.0    14.3     0.0     0.0     0.0
                                                  23.2%                  890 Londrina-138  1   -24.8    12.9    27.9
                                                  22.9%                 2483 Araponga-138  1    -4.2   -27.2    27.5
 2489  138  0   0.955     0.0     0.0    24.1     0.0     4.4     0.0
 SAPlatin-138   -75.2     0.0     0.0     9.0     0.0     0.0     0.0
                                                  52.5%                  875 Andira-B-138  1   -24.1    -4.6    25.7
 2491  138  0   1.019     0.0     0.0    12.9     0.0     0.0     0.0
 CREI+FGS-138   -71.5     0.0     0.0     2.8     0.0     0.0     0.0
                                                  18.0%                  867 Mandagua-138  1    13.6    12.3    18.0
                                                  29.9%                  879 Apucaran-138  1   -26.5   -15.1    29.9
 2492  138  0   1.000     0.0     0.0     7.6     0.0     0.0     0.0
 LNA558DXT138   -70.7     0.0     0.0     2.2     0.0     0.0     0.0
                                                   9.7%                  890 Londrina-138  1    -9.2     2.4     9.5
                                                   5.0%                  893 RDavidsA-138  1     1.6    -4.6     4.9
 2493  138  0   1.006     0.0     0.0    12.0     0.0     0.0     0.0
 MGA666CO-138   -71.7     0.0     0.0     3.5     0.0     0.0     0.0
                                                  39.3%                  864 JAlvorad-138  1    37.8    11.4    39.3
                                                  37.5%                  869 Maringa--138  1   -49.8   -14.9    51.7
 2495  138  0   0.984     0.0     0.0     0.0     0.0     0.0     0.0
 SAntSudo-138   -58.4     0.0     0.0     0.0     0.0     0.0     0.0
                                                   0.0%                  855 Realeza--138  1     0.0     0.0     0.0
CEPEL - CENTRO DE PESQUISAS DE ENERGIA ELETRICA - PROGRAMA DE ANALISE DE REDES - V08MAR05A                          PAG. 297

ANUAL 06/07 * SETEMBRO 2006 PESADA S/SE 19H N/NE 19H * ANAT0 - FSE - C13
RELATORIO COMPLETO DO SISTEMA * AREA 22 * *        COPEL - SECUNDARIA        *

X----------------- D A D O S  -  B A R R A -------------------------X------------ F L U X O S  -  C I R C U I T O S ------------X
```

```
 DA BARRA      TENSAO GERACAO INJ EQV  CARGA   ELO CC  SHUNT    MOTOR
 NUM. KV TIPO   MOD/     MW/     MW/     MW/     MW/   Mvar/     MW/
     NOME       ANG     Mvar    Mvar    Mvar    Mvar   EQUIV    Mvar  PARA BARRA                    FLUXOS
                                                FLUXO % SHUNT L         NUM.     NOME     NC     MW    Mvar  MVA/V_d   TAP  DEFAS TIE
X------------X-------X-------X-------X-------X-------X-------X-------X----X------------X--X-------X-------X-------X------X-----X---X

 2498  138  0   0.899     0.0     0.0     0.0     0.0     0.0     0.0
 AcarayCF-138   -64.4     0.0     0.0     0.0     0.0     0.0     0.0
                                               47.2%                     844 FIguacu--138  1    47.0    -3.0    52.4
                                               87.3%                    2499 Acaray-CF-11  1   -47.0     3.0    52.4 0.897*
 2499    1  0   1.001    47.0     0.0     0.0     0.0     0.0     0.0
 Acaray-CF-11   -60.7     0.0     0.0     0.0     0.0     0.0     0.0
                                               78.3%                    2498 AcarayCF-138  1    47.0     0.0    47.0
 9321    1  0   1.000     0.0     0.0    31.7     0.0     2.4     0.0
 CComprido-13   -77.4     0.0     0.0    11.1     0.0     0.0     0.0
                                               33.0%                     816 CComprid-230  1   -15.9    -4.4    16.5              21
                                               32.8%                     816 CComprid-230  2   -15.8    -4.3    16.4              21
 9322    1  0   1.000     0.0     0.0    16.8     0.0     0.0     0.0
 DISJosePi-13   -76.8     0.0     0.0     0.6     0.0     0.0     0.0
                                               16.8%                     818 DISJoseP-230  1    -8.4    -0.3     8.4              21
                                               16.8%                     818 DISJoseP-230  2    -8.4    -0.3     8.4              21
 9323    1  0   1.001     0.0     0.0     9.9     0.0     0.0     0.0
 Jaguariai-13   -86.2     0.0     0.0     6.2     0.0     0.0     0.0
                                               58.4%                    2423 Jaguaria-138  1    -9.9    -6.2    11.7
 9324    1  0   0.995     0.0     0.0     0.0     0.0     0.0     0.0
 PGrossaS-FIC   -85.5     0.0     0.0     0.0     0.0     0.0     0.0
                                               48.4%                     831 PGrossaS-230  1   -23.0    -7.0    24.2              21
                                               42.1%                    9325 PGrossaSu-34  1    20.1     5.7    21.1 1.000F
                                               12.7%                    9326 PGrossaSu-13  1     2.9     1.2     3.2 1.000F
 9325   23  0   1.000     0.0     0.0    43.5     0.0     9.6     0.0
 PGrossaSu-34   -84.5     0.0     0.0    23.2     0.0     0.0     0.0
                                               49.1%                     831 PGrossaS-230  1   -23.4    -7.5    24.5              21
                                               42.1%                    9324 PGrossaS-FIC  1   -20.1    -6.1    21.1
 9326    1  0   0.990     0.0     0.0     2.9     0.0     0.0     0.0
 PGrossaSu-13   -86.1     0.0     0.0     1.2     0.0     0.0     0.0
                                               12.7%                    9324 PGrossaS-FIC  1    -2.9    -1.2     3.2
 9327    1  0   0.985     0.0     0.0     0.0     0.0     0.0     0.0
 PGrossaN-FIC   -74.8     0.0     0.0     0.0     0.0     0.0     0.0
                                               56.4%                     829 PGrossaN-230  1   -36.0   -20.9    42.3              21
                                               50.2%                    9328 PGrossaNo-34  1    31.9    18.9    37.7 1.000F
                                               15.4%                    9329 PGrossaNo-13  1     4.1     2.0     4.6 1.000F
 9328   23  0   1.000     2.2     0.0    45.6     0.0     9.6     0.0
 PGrossaNo-34   -73.4     0.0     0.0    36.3     0.0     0.0     0.0
                                               17.8%                     829 PGrossaN-230  1   -11.5    -6.7    13.3              21
                                               50.2%                    9327 PGrossaN-FIC  1   -31.9   -20.0    37.7
CEPEL - CENTRO DE PESQUISAS DE ENERGIA ELETRICA - PROGRAMA DE ANALISE DE REDES - V08MAR05A                                PAG. 298

ANUAL 06/07 * SETEMBRO 2006 PESADA S/SE 19H N/NE 19H * ANAT0 - FSE - C13
RELATORIO COMPLETO DO SISTEMA * AREA 22 * *        COPEL - SECUNDARIA        *

X----------------- D A D O S  -  B A R R A -------------------------X------------ F L U X O S  -  C I R C U I T O S ------------X
 DA BARRA      TENSAO GERACAO INJ EQV  CARGA   ELO CC  SHUNT    MOTOR
 NUM. KV TIPO   MOD/     MW/     MW/     MW/     MW/   Mvar/     MW/
     NOME       ANG     Mvar    Mvar    Mvar    Mvar   EQUIV    Mvar  PARA BARRA                    FLUXOS
                                                FLUXO % SHUNT L         NUM.     NOME     NC     MW    Mvar  MVA/V_d   TAP  DEFAS TIE
X------------X-------X-------X-------X-------X-------X-------X-------X----X------------X--X-------X-------X-------X------X-----X---X

 9329    1  0   0.977     0.0     0.0     4.1     0.0     0.0     0.0
 PGrossaNo-13   -75.8     0.0     0.0     1.9     0.0     0.0     0.0
                                               15.4%                    9327 PGrossaN-FIC  1    -4.1    -1.9     4.6
```

```
 9330   23  0   1.000     0.0     0.0     9.0     0.0     0.0     0.0
 SaoMateus-34   -72.1     0.0     0.0     2.7     0.0     0.0     0.0
                                              30.3%                 834 SMateus--230  1    -9.0    -2.7     9.4                21
 9331    1  0   1.001     0.0     0.0     4.4     0.0     0.0     0.0
 SaoMateus-13   -71.8     0.0     0.0     1.8     0.0     0.0     0.0
                                              15.3%                 834 SMateus--230  1    -4.4    -1.8     4.7                21
 9332    1  0   1.001     0.0     0.0    31.1     0.0     0.0     0.0
 CAssobio--13   -77.6     0.0     0.0    14.5     0.0     0.0     0.0
                                              34.3%                2353 CAssobio-230  1   -15.5    -7.2    17.1                21
                                              34.3%                2353 CAssobio-230  2   -15.6    -7.3    17.1                21
 9333    1  0   0.978     0.0     0.0     0.0     0.0     0.0     0.0
 Figueira-FIC   -78.5     0.0     0.0     0.0     0.0     0.0     0.0
                                              32.7%                 884 Figueira-230  1   -47.8     4.3    49.1                21
                                              23.8%                2485 Figueira-138  1    33.9    -8.3    35.7 1.000F
                                              24.7%                9334 Figueira--13  1    13.9     4.0    14.8 1.000F
 9334    1  0   0.963     0.0     0.0    13.9     0.0     0.0     0.0
 Figueira--13   -82.1     0.0     0.0     3.1     0.0     0.0     0.0
                                              24.7%                9333 Figueira-FIC  1   -13.9    -3.1    14.8
 9335    1  0   1.024     0.0     0.0     0.0     0.0     0.0     0.0
 Areia----FIC   -55.6     0.0     0.0     0.0     0.0     0.0     0.0
                                              14.5%                 823 Areia----138  1    -2.0    22.1    21.7 1.000F
                                              14.6%                 934 Areia----230  1     1.1   -22.4    21.9                20
                                               1.5%                9336 Areia-----13  1     0.9     0.3     0.9 1.000F
 9336    1  0   1.023     0.0     0.0     0.9     0.0     0.0     0.0
 Areia-----13   -55.8     0.0     0.0     0.3     0.0     0.0     0.0
                                               1.5%                9335 Areia----FIC  1    -0.9    -0.3     0.9
 9337    1  0   1.029     0.0     0.0     0.0     0.0     0.0     0.0
 GPSouza--FIC   -74.4     0.0     0.0     0.0     0.0     0.0     0.0
                                              21.6%                 817 GPSouza--230  1   -32.9    -5.4    32.4                21
                                              18.9%                2373 GPSouza--138  1    28.9     4.1    28.4 1.000F
                                               6.8%                9338 GPSouza---13  1     4.0     1.3     4.1 1.000F
 9338    1  0   1.024     0.0     0.0     4.0     0.0     0.0     0.0
 GPSouza---13   -75.2     0.0     0.0     1.2     0.0     0.0     0.0
                                               6.8%                9337 GPSouza--FIC  1    -4.0    -1.2     4.1
```



```
X----------------- D A D O S  -  B A R R A -------------------------X------------ F L U X O S  -  C I R C U I T O S ------------X
 DA BARRA      TENSAO GERACAO INJ EQV  CARGA   ELO CC  SHUNT    MOTOR
 NUM. KV TIPO   MOD/     MW/     MW/     MW/     MW/   Mvar/     MW/
     NOME       ANG     Mvar    Mvar    Mvar    Mvar   EQUIV    Mvar  PARA BARRA                    FLUXOS
                                                FLUXO % SHUNT L         NUM.     NOME     NC     MW    Mvar  MVA/V_d   TAP  DEFAS TIE
X------------X-------X-------X-------X-------X-------X-------X-------X----X------------X--X-------X-------X-------X------X-----X---X

 9339    1  0   1.003     0.0     0.0     0.0     0.0     0.0     0.0
 PBranco--FIC   -62.8     0.0     0.0     0.0     0.0     0.0     0.0
                                              82.7%                 853 PBranco--138  1   -32.0   -11.4    33.9
                                              34.0%                9340 PBranco---34  1    10.6     9.1    13.9 1.000F
                                              52.3%                9341 PBranco---13  1    21.4     2.3    21.5 1.000F
 9340   23  0   1.004     7.9     0.0    18.5     0.0     0.0     0.0
 PBranco---34   -62.7     0.0     0.0     9.1     0.0     0.0     0.0
                                              34.0%                9339 PBranco--FIC  1   -10.6    -9.1    13.9
 9341    1  0   1.000     0.0     0.0    21.4     0.0     9.6     0.0
 PBranco---13   -64.8     0.0     0.0    11.2     0.0     0.0     0.0
                                              52.3%                9339 PBranco--FIC  1   -21.4    -1.6    21.5
 9342   14  0   1.000     0.0     0.0    33.9     0.0     7.2     0.0
 Cindustri-13   -77.9     0.0     0.0    16.0     0.0     0.0     0.0
                                              34.9%                 815 CIndustr-230  1   -16.9    -4.4    17.4                21
```

```
                                                   35.2%                 815 CIndustr-230  2   -17.0    -4.4    17.6                21
 9388   69  0   1.003     0.0     0.0     0.0     0.0     4.8     0.0
 PinheiriB-69   -81.8     0.0     0.0     0.0     0.0     0.0     0.0
                                                    6.8%                2402 Umbara-A--69  1     0.0     4.8     4.8
 9437  138  0   1.007     0.0     0.0    17.5     0.0     0.0     0.0
 PGO178MAS138   -74.2     0.0     0.0     5.1     0.0     0.0     0.0
                                                   12.1%                2436 Palmeira-138  1    12.7     4.1    13.3
                                                   28.6%                2437 PGrossaS-138  1   -30.2    -9.2    31.4
 9860  138  0   1.000     0.0     0.0    10.0     0.0     0.0     0.0
 CMO669COA138   -68.7     0.0     0.0     2.9     0.0     0.0     0.0
                                                    8.7%                 860 CMourao--138  1   -10.0    -2.9    10.4


TOTAIS DA AREA 22


X--------X--------X--------X--------X--------X--------X--------X--------X
  GERACAO  INJ EQV   CARGA   ELO CC    SHUNT   EXPORT   IMPORT   PERDAS
    MW/      MW/      MW/     MW/     Mvar/     MW/      MW/      MW/
   Mvar     Mvar     Mvar    Mvar     EQUIV    Mvar     Mvar     Mvar
X--------X--------X--------X--------X--------X--------X--------X--------X

    203.8      0.0   3655.8      0.0    712.8     46.5   3573.4     74.9
      0.0      0.0   1532.3      0.0      0.0    151.5    877.6    -93.4
CEPEL - CENTRO DE PESQUISAS DE ENERGIA ELETRICA - PROGRAMA DE ANALISE DE REDES - V08MAR05A                                PAG. 300

ANUAL 06/07 * SETEMBRO 2006 PESADA S/SE 19H N/NE 19H * ANAT0 - FSE - C13
RELATORIO COMPLETO DO SISTEMA * AREA 23 * *              CEEE                 *

X----------------- D A D O S  -  B A R R A ------------------------X------------ F L U X O S  -  C I R C U I T O S ------------X
 DA BARRA      TENSAO GERACAO INJ EQV  CARGA   ELO CC  SHUNT    MOTOR
 NUM. KV TIPO   MOD/     MW/     MW/     MW/     MW/   Mvar/     MW/
     NOME       ANG     Mvar    Mvar    Mvar    Mvar   EQUIV    Mvar  PARA BARRA                    FLUXOS
                                                FLUXO % SHUNT L         NUM.     NOME     NC     MW    Mvar  MVA/V_d   TAP  DEFAS TIE
X------------X-------X-------X-------X-------X-------X-------X-------X----X------------X--X-------X-------X-------X------X-----X---X

 1155    1  1   1.020   450.0     0.0     0.0     0.0     0.0     0.0
 ITAUBA---4GR   -44.9     5.6     0.0     0.0     0.0     0.0     0.0
                                                   79.4%                1215 Itauba---230  1   450.0     5.6   441.2
 1156    1 -1   1.024     0.0     0.0     0.0     0.0     0.0     0.0
 ITAUBA---000   -50.8     0.0     0.0     0.0     0.0     0.0     0.0
                                                    0.0%                1215 Itauba---230  1     0.0     0.0     0.0
 1162    1  1   1.020   162.0     0.0     0.0     0.0     0.0     0.0
 JACUI----6GR   -42.5    63.5     0.0     0.0     0.0     0.0     0.0
                                                   94.8%                1216 Jacui----138  1   162.0    63.5   170.6
 1175    1  1   1.020   135.0     0.0     0.0     0.0     0.0     0.0
 PREAL----2GR   -47.4    -0.4     0.0     0.0     0.0     0.0     0.0
                                                   78.8%                1243 PReal----230  1   135.0    -0.4   132.4
 1179    1  1   1.000     0.0     0.0     0.0     0.0     0.0     0.0
 PAlegre6-1CS   -72.1     0.6     0.0     0.0     0.0     0.0     0.0
                                                    1.7%                1260 PAlegr6A-FIC  1     0.3     0.3     0.4 1.000F
                                                    1.5%                1261 PAlegr6B-FIC  1    -0.3     0.3     0.4 1.000F
 1180    1  0   1.002     0.0     0.0     0.0     0.0     0.0     0.0
 PAlegre9--13   -69.8     0.0     0.0     0.0     0.0     0.0     0.0
                                                    0.0%                1265 PAlegre9-FIC  1     0.0     0.0     0.0 1.000F
 1181    1  1   1.038     0.0     0.0     0.0     0.0     0.0     0.0
 VenAires-1CS   -65.1    -2.7     0.0     0.0     0.0     0.0     0.0
                                                    8.8%                1297 VenAires-FIC  1     0.0    -2.7     2.6 1.000F
 1186  230  0   1.018     0.0     0.0     0.0     0.0   -51.8     0.0
```

```
 Alegret2-230   -42.1     0.0     0.0     0.0     0.0     0.0     0.0
                                                44.7%                 1185 Alegrete2-69  1    37.4    -5.5    37.1 0.999*        31
                                                15.8%                 1225 Macambar-230  1    33.1   -28.0    42.6
                                                52.9%                 1230 Livramen-230  1   142.1   -30.1   142.7
                                                38.9%                 1286 SVicente-230  1   113.5   -16.8   112.8
                                                34.0%                 1294 Uruguaia-230  1  -219.6    19.2   216.6
                                                38.9%                 1296 Uruguai5-230  1  -106.5     9.5   105.0
 1187    1  0   1.001     0.0     0.0     0.0     0.0     0.0     0.0
 Gravat2T8-69   -64.9     0.0     0.0     0.0     0.0     0.0     0.0
                                                 0.0%                 1210 Gravata2-230  1     0.0     0.0     0.0
 1188  230  0   1.036     0.0     0.0     0.0     0.0     0.0     0.0
 Bage2----230   -61.7     0.0     0.0     0.0     0.0     0.0     0.0
                                                76.5%                 1189 Bage2-----69  1    39.2     5.9    38.3 1.024*        70
                                                42.8%                 1230 Livramen-230  1  -115.7    30.5   115.5
                                                38.9%                 1239 PMedici--230  1    76.5   -36.3    81.8
CEPEL - CENTRO DE PESQUISAS DE ENERGIA ELETRICA - PROGRAMA DE ANALISE DE REDES - V08MAR05A                                PAG. 301

ANUAL 06/07 * SETEMBRO 2006 PESADA S/SE 19H N/NE 19H * ANAT0 - FSE - C13
RELATORIO COMPLETO DO SISTEMA * AREA 23 * *              CEEE                 *

X----------------- D A D O S  -  B A R R A ------------------------X------------ F L U X O S  -  C I R C U I T O S ------------X
 DA BARRA      TENSAO GERACAO INJ EQV  CARGA   ELO CC  SHUNT    MOTOR
 NUM. KV TIPO   MOD/     MW/     MW/     MW/     MW/   Mvar/     MW/
     NOME       ANG     Mvar    Mvar    Mvar    Mvar   EQUIV    Mvar  PARA BARRA                    FLUXOS
                                                FLUXO % SHUNT L         NUM.     NOME     NC     MW    Mvar  MVA/V_d   TAP  DEFAS TIE
X------------X-------X-------X-------X-------X-------X-------X-------X----X------------X--X-------X-------X-------X------X-----X---X

 1190  230  0   1.026     0.0     0.0     0.0     0.0     0.0     0.0
 Canoas1--230   -65.5     0.0     0.0     0.0     0.0     0.0     0.0
                                                83.6%                 1324 Canoas1---23  1    39.3    17.2    41.8 0.987*        31
                                                15.5%                 9259 Canoa1-D-230  1   -39.3   -17.2    41.8
 1191  230  0   1.041     0.0     0.0     0.0     0.0     0.0     0.0
 Caxias-C-230   -62.0     0.0     0.0     0.0     0.0     0.0     0.0
                                                49.6%                  962 Farroupi-230  1   108.1     8.5   104.3              20
                                                49.6%                  962 Farroupi-230  2   108.1     8.5   104.3              20
                                                 5.8%                  965 Caxias---230  1  -603.8   -26.0   580.8              20
                                                38.6%                 1198 CampoBom-230  1    84.4    -2.7    81.1
                                                38.6%                 1198 CampoBom-230  2    84.4    -2.6    81.2
                                                26.5%                 1200 Caxias2--230  1    97.7     1.6    94.0
                                                33.0%                 1249 Taquara--230  1   121.0    12.7   116.9
 1194  230  0   1.030     0.0     0.0     0.0     0.0     0.0     0.0
 Camaqua--230   -67.5     0.0     0.0     0.0     0.0     0.0     0.0
                                                68.6%                 1195 Camaqua---69  1    56.1    17.2    57.0 1.004*        70
                                                 8.0%                 1199 Guaiba2--230  1   -19.8     0.6    19.2
                                                16.4%                 1239 PMedici--230  1   -36.3   -17.8    39.3
 1198  230  0   1.031     0.0     0.0     0.0     0.0     0.0     0.0
 CampoBom-230   -64.6     0.0     0.0     0.0     0.0     0.0     0.0
                                                38.7%                 1191 Caxias-C-230  1   -83.6    -4.8    81.2
                                                38.7%                 1191 Caxias-C-230  2   -83.7    -4.8    81.3
                                                48.3%                 1196 CampoBom--69  1    40.8     6.4    40.1 1.021*        31
                                                48.1%                 1196 CampoBom--69  2    40.7     6.4    39.9 1.021*        31
                                                12.3%                 1210 Gravata2-230  1    25.7    -6.7    25.7
                                                12.3%                 1210 Gravata2-230  2    25.7    -6.7    25.7
                                                69.7%                 9201 CampoBom--23  1    34.4    10.3    34.8 1.006*        31
 1199  230  0   1.026     0.0     0.0     0.0     0.0     0.0     0.0
 Guaiba2--230   -66.5     0.0     0.0     0.0     0.0     0.0     0.0
                                                10.5%                 1194 Camaqua--230  1    19.9   -16.4    25.1
                                                34.5%                 1197 Guaiba2---69  1    16.0     7.6    17.2 1.008*        70
                                                15.1%                 1212 Eldorado-230  1   -35.9     8.8    36.0
 1200  230  0   1.035     0.0     0.0     0.0     0.0     0.0     0.0
```

```
 Caxias2--230   -63.2     0.0     0.0     0.0     0.0     0.0     0.0
                                                 3.8%                 962 Farroupi-230  1    -7.8     3.1     8.1                20
                                                26.6%                1191 Caxias-C-230  1   -97.3    -4.2    94.1
                                                61.5%                1201 Caxias2---69  1   105.1     1.2   101.5 1.043*         32
CEPEL - CENTRO DE PESQUISAS DE ENERGIA ELETRICA - PROGRAMA DE ANALISE DE REDES - V08MAR05A                                PAG. 302

ANUAL 06/07 * SETEMBRO 2006 PESADA S/SE 19H N/NE 19H * ANAT0 - FSE - C13
RELATORIO COMPLETO DO SISTEMA * AREA 23 * *              CEEE                *

X----------------- D A D O S  -  B A R R A ------------------------X------------ F L U X O S  -  C I R C U I T O S ------------X
 DA BARRA      TENSAO GERACAO INJ EQV  CARGA   ELO CC  SHUNT    MOTOR
 NUM. KV TIPO   MOD/     MW/     MW/     MW/     MW/   Mvar/     MW/
     NOME       ANG     Mvar    Mvar    Mvar    Mvar   EQUIV    Mvar  PARA BARRA                    FLUXOS
                                                FLUXO % SHUNT L        NUM.     NOME     NC     MW    Mvar  MVA/V_d   TAP  DEFAS TIE
X------------X-------X-------X-------X-------X-------X-------X-------X----X------------X--X-------X-------X-------X------X-----X---X

 1204  230  0   1.037     0.0     0.0     0.0     0.0     0.0     0.0
 PoloPetr-230   -63.8     0.0     0.0     0.0     0.0     0.0     0.0
                                                34.2%                 980 NSRita---230  1  -152.8  -115.0   184.5                20
                                                51.4%                1215 Itauba---230  1  -126.7    12.4   122.8
                                                39.5%                1258 CInduPAl-230  1    97.1    12.0    94.4
                                                 9.9%                1336 PoloP-Cat-34  1     7.0     3.1     7.4 1.000F         31
                                                74.5%                1337 PoloP-Liv-34  1   152.0    84.1   167.6 0.980F         66
                                                45.6%                2077 PoloPetro-69  1    23.4     3.4    22.8 1.009*         31
 1206  230  0   1.032     0.0     0.0     0.0     0.0     0.0     0.0
 Garibald-230   -63.7     0.0     0.0     0.0     0.0     0.0     0.0
                                                15.7%                 962 Farroupi-230  1   -53.3    -3.8    51.8                20
                                                62.4%                9280 Garibal1-FIC  1    53.3     3.8    51.8 1.019*         32
 1210  230  0   1.031     0.0     0.0     0.0     0.0   212.4     0.0
 Gravata2-230   -64.9     0.0     0.0     0.0     0.0     0.0     0.0
                                                36.2%                 976 Gravatai-525  1  -250.5    -2.0   243.1 1.005*         20
                                                38.7%                 976 Gravatai-525  2  -268.3     0.4   260.3 1.005*         20
                                                36.2%                 976 Gravatai-525  3  -250.9    -0.8   243.5 1.005*         20
                                                 0.0%                1187 Gravat2T8-69  1     0.0     0.0     0.0 1.029*
                                                11.9%                1198 CampoBom-230  1   -25.6     2.6    25.0
                                                11.9%                1198 CampoBom-230  2   -25.6     2.6    25.0
                                                58.7%                1209 Gravatai2-69  1    92.0    38.8    96.9 0.980*         70
                                                61.0%                1209 Gravatai2-69  2    95.6    40.3   100.7 0.980*         70
                                                 2.5%                1248 Canoas2--230  1     7.3     1.0     7.2
                                                 3.9%                1258 CInduPAl-230  1    11.1     3.2    11.2
                                                 3.9%                1258 CInduPAl-230  2    11.1     3.2    11.2
                                                 3.9%                1258 CInduPAl-230  3    11.1     3.2    11.2
                                                45.9%                1263 PAlegre6-230  1    96.0    25.1    96.3
                                                45.9%                1263 PAlegre6-230  2    96.0    25.1    96.3
                                                29.3%                1263 PAlegre6-230  3    92.6    26.3    93.4
                                                26.8%                1264 PAlegre8-230  1    91.1     4.3    88.5
                                                32.1%                1268 PAlegr10-230  1   100.6    32.0   102.4
                                                25.8%                1315 Fibrapla-230  1    70.9    11.7    69.8                66
                                                 3.7%                2082 CIAGrava-230  1    12.5     0.9    12.2                32
                                                64.6%                9284 Grava2RGE-23  1    32.8    -5.6    32.3 1.049*         32
 1212  230  0   1.026     0.0     0.0     0.0     0.0     0.0     0.0
 Eldorado-230   -66.2     0.0     0.0     0.0     0.0     0.0     0.0
                                                15.4%                1199 Guaiba2--230  1    35.9   -11.3    36.7
                                                20.0%                1267 PAlegre9-230  1   -48.6     6.5    47.8
                                                26.5%                9241 Eldorado--23  1    12.7     4.8    13.2 1.013*         70
CEPEL - CENTRO DE PESQUISAS DE ENERGIA ELETRICA - PROGRAMA DE ANALISE DE REDES - V08MAR05A                                PAG. 303

ANUAL 06/07 * SETEMBRO 2006 PESADA S/SE 19H N/NE 19H * ANAT0 - FSE - C13
RELATORIO COMPLETO DO SISTEMA * AREA 23 * *              CEEE                *
```

```
X----------------- D A D O S  -  B A R R A -------------------------X------------ F L U X O S  -  C I R C U I T O S ------------X
 DA BARRA      TENSAO GERACAO INJ EQV  CARGA   ELO CC  SHUNT    MOTOR
 NUM. KV TIPO   MOD/     MW/     MW/     MW/     MW/   Mvar/     MW/
     NOME       ANG     Mvar    Mvar    Mvar    Mvar   EQUIV    Mvar  PARA BARRA                    FLUXOS
                                                FLUXO % SHUNT L         NUM.     NOME     NC     MW    Mvar  MVA/V_d   TAP  DEFAS TIE
X------------X-------X-------X-------X-------X-------X-------X-------X----X------------X--X-------X-------X-------X------X-----X---X

 1213  230  0   1.020     0.0     0.0     0.0     0.0     0.0     0.0
 Guarita--230   -57.6     0.0     0.0     0.0     0.0     0.0     0.0
                                                14.3%                  1041 PFundo---230  1   -21.9   -14.1    25.6                20
                                                57.0%                  1214 Guarita---69  1    47.1    10.2    47.3 1.004*         32
                                                57.0%                  1214 Guarita---69  2    47.1    10.2    47.3 1.004*         32
                                                28.4%                  1283 StaRosa--230  1   -72.4    -6.3    71.2
 1215  230  0   1.050     0.0     0.0     0.0     0.0     0.0     0.0
 Itauba---230   -50.8     0.0     0.0     0.0     0.0     0.0     0.0
                                                41.0%                   980 NSRita---230  1   122.7   -23.1   118.9                20
                                                77.4%                  1155 ITAUBA---4GR  1  -450.0    40.4   430.4 1.025F
                                                 0.0%                  1156 ITAUBA---000  1     0.0     0.0     0.0 1.025F
                                                53.2%                  1204 PoloPetr-230  1   131.9   -19.9   127.1
                                                16.0%                  1223 DFrancis-230  1   -47.0    12.7    46.4
                                                16.0%                  1223 DFrancis-230  2   -47.0    12.7    46.4
                                                48.1%                  1243 PReal----230  1   118.4   -24.0   115.1
                                                85.3%                  1255 SCruz1-Y-230  1   171.0     1.3   162.9
 1216  138  0   1.049     0.0     0.0     0.0     0.0     0.0     0.0
 Jacui----138   -50.4     0.0     0.0     0.0     0.0     0.0     0.0
                                                88.2%                  1162 JACUI----6GR  1  -162.0   -38.9   158.8 1.074F
                                            SUP 116.5%                 1220 JacuiRGE--23  1    14.2     3.6    14.0 1.027*         32
                                                41.9%                  1242 PReal----138  1    40.7    11.0    40.2
                                                41.9%                  1242 PReal----138  2    40.7    11.0    40.2
                                                30.0%                  1276 SMaria1--138  1    25.0     6.6    24.6                31
                                                41.7%                  2061 CruzAlta-138  1    41.5     6.6    40.0                32
 1217  230  0   1.032     0.0     0.0     0.0     0.0     0.0     0.0
 LajeadoY-230   -61.5     0.0     0.0     0.0     0.0     0.0     0.0
                                                21.8%                   980 NSRita---230  1    43.5   -25.7    49.0                20
                                                40.5%                  1218 Lajeado2-230  1    93.1    17.7    91.9
                                                58.4%                  1243 PReal----230  1  -136.6     8.0   132.6
 1218  230  0   1.027     0.0     0.0     0.0     0.0     0.0     0.0
 Lajeado2-230   -62.2     0.0     0.0     0.0     0.0     0.0     0.0
                                                40.7%                  1217 LajeadoY-230  1   -92.9   -19.0    92.3
                                                55.3%                  1327 Lajeado2-FIC  1    46.2     9.5    45.9 1.013*
                                                55.9%                  2085 Lajeado--FIC  1    46.7     9.6    46.4 1.013*
 1223  230  0   1.048     0.0     0.0     0.0     0.0     0.0     0.0
 DFrancis-230   -50.2     0.0     0.0     0.0     0.0     0.0     0.0
                                                78.3%                  1176 DFRANCIS-2GR  1  -113.0     8.6   108.1 1.025F         39
                                                 0.0%                  1177 DFRANCIS-000  1     0.0     0.0     0.0 1.025F         39
                                                16.4%                  1215 Itauba---230  1    47.1   -16.6    47.6
                                                16.4%                  1215 Itauba---230  2    47.1   -16.6    47.6
                                                12.3%                  1278 SMaria3--230  1    18.8    24.5    29.5
CEPEL - CENTRO DE PESQUISAS DE ENERGIA ELETRICA - PROGRAMA DE ANALISE DE REDES - V08MAR05A                                  PAG. 304

ANUAL 06/07 * SETEMBRO 2006 PESADA S/SE 19H N/NE 19H * ANAT0 - FSE - C13
RELATORIO COMPLETO DO SISTEMA * AREA 23 * *              CEEE                *

X----------------- D A D O S  -  B A R R A -------------------------X------------ F L U X O S  -  C I R C U I T O S ------------X
 DA BARRA      TENSAO GERACAO INJ EQV  CARGA   ELO CC  SHUNT    MOTOR
 NUM. KV TIPO   MOD/     MW/     MW/     MW/     MW/   Mvar/     MW/
     NOME       ANG     Mvar    Mvar    Mvar    Mvar   EQUIV    Mvar  PARA BARRA                    FLUXOS
                                                FLUXO % SHUNT L         NUM.     NOME     NC     MW    Mvar  MVA/V_d   TAP  DEFAS TIE
X------------X-------X-------X-------X-------X-------X-------X-------X----X------------X--X-------X-------X-------X------X-----X---X
```

```
 1225  230  0   1.029     0.0     0.0     0.0     0.0   -31.8     0.0
 Macambar-230   -43.7     0.0     0.0     0.0     0.0     0.0     0.0
                                                25.7%                 1046 SAngelo--230  1    91.7   -34.2    95.1                20
                                                12.9%                 1186 Alegret2-230  1   -32.9    14.4    34.8
                                                13.1%                 1235 Macambara-69  1    11.0    -1.9    10.8 1.032*         31
                                                33.7%                 1254 SaoBorja-230  1    88.0   -32.0    90.9
                                                35.1%                 1294 Uruguaia-230  1  -157.8    21.9   154.8
 1228  230  0   1.030     0.0     0.0     0.0     0.0     0.0     0.0
 NPrata2--230   -63.4     0.0     0.0     0.0     0.0     0.0     0.0
                                                 5.0%                  962 Farroupi-230  1    -9.4   -12.0    14.8                20
                                                21.1%                 1041 PFundo---230  1   -62.4    -2.0    60.6                20
                                                59.2%                 1226 NPrata2---69  1    30.0     5.5    29.6 0.998*         32
                                                59.9%                 1226 NPrata2---69  2    30.3     5.6    30.0 0.998*         32
                                                 5.1%                 2096 Vipal----230  1    11.5     2.8    11.5                32
 1230  230  0   1.022     0.0     0.0     0.0     0.0     0.0     0.0
 Livramen-230   -52.0     0.0     0.0     0.0     0.0     0.0     0.0
                                                 1.0%                 1043 RiveraCF-230  1     0.0    -2.1     2.0                20
                                                51.1%                 1186 Alegret2-230  1  -137.3    31.6   137.9
                                                45.5%                 1188 Bage2----230  1   119.9   -37.2   122.9
                                                37.2%                 9202 Livramen-FIC  1    17.4     7.6    18.6 1.003*
 1231  230  0   1.012     0.0     0.0     0.0     0.0     0.0     0.0
 Osorio2--230   -67.3     0.0     0.0     0.0     0.0     0.0     0.0
                                                41.3%                 1232 Osorio2---69  1    33.6     8.7    34.3 0.975*         70
                                                41.3%                 1232 Osorio2---69  2    33.6     8.7    34.3 0.975*         70
                                                41.3%                 1232 Osorio2---69  3    33.5     8.7    34.2 0.975*         70
                                                13.8%                 1249 Taquara--230  1   -48.3   -10.3    48.9
                                                20.0%                 1315 Fibrapla-230  1   -52.4   -15.7    54.0                66
 1236  230  0   1.035     0.0     0.0     0.0     0.0     0.0     0.0
 Pelotas3-230   -68.7     0.0     0.0     0.0     0.0     0.0     0.0
                                                21.0%                 1239 PMedici--230  1   -78.8    -8.5    76.5
                                                53.7%                 1240 Pelotas3-138  1    43.6    15.2    44.6 1.026*         70
                                                53.7%                 1240 Pelotas3-138  2    43.6    15.2    44.6 1.026*         70
                                                 7.5%                 1246 Quinta---230  1    19.5    -8.1    20.4
                                                11.1%                 1258 CInduPAl-230  1   -27.9   -13.8    30.0
 1239  230  0   1.045     0.0     0.0     0.0     0.0     0.0     0.0
 PMedici--230   -63.8     0.0     0.0     0.0     0.0     0.0     0.0
                                                26.1%                 1170 PMEDICIA-1GR  1   -45.0     5.1    43.3 1.025F         24
                                                24.2%                 1172 PMEDICIB-1GR  1   -94.5    10.7    91.0 1.025F         24
                                                37.2%                 1188 Bage2----230  1   -76.0    29.9    78.1
                                                16.1%                 1194 Camaqua--230  1    36.8   -16.4    38.5
                                                21.1%                 1236 Pelotas3-230  1    79.6    -9.7    76.7
                                                25.6%                 1238 PMedici--138  1    30.9    -1.9    29.7                70
                                                28.2%                 1246 Quinta---230  1    68.2   -17.7    67.4
CEPEL - CENTRO DE PESQUISAS DE ENERGIA ELETRICA - PROGRAMA DE ANALISE DE REDES - V08MAR05A                                PAG. 305

ANUAL 06/07 * SETEMBRO 2006 PESADA S/SE 19H N/NE 19H * ANAT0 - FSE - C13
RELATORIO COMPLETO DO SISTEMA * AREA 23 * *              CEEE                *

X----------------- D A D O S  -  B A R R A -------------------------X------------ F L U X O S  -  C I R C U I T O S ------------X
 DA BARRA      TENSAO GERACAO INJ EQV  CARGA   ELO CC  SHUNT    MOTOR
 NUM. KV TIPO   MOD/     MW/     MW/     MW/     MW/   Mvar/     MW/
     NOME       ANG     Mvar    Mvar    Mvar    Mvar   EQUIV    Mvar  PARA BARRA                    FLUXOS
                                                FLUXO % SHUNT L         NUM.     NOME     NC     MW    Mvar  MVA/V_d   TAP  DEFAS TIE
X------------X-------X-------X-------X-------X-------X-------X-------X----X------------X--X-------X-------X-------X------X-----X---X

 1242  138  0   1.045     0.0     0.0     0.0     0.0     0.0     0.0
 PReal----138   -50.8     0.0     0.0     0.0     0.0     0.0     0.0
                                                42.0%                 1216 Jacui----138  1   -40.6   -11.3    40.3
                                                42.0%                 1216 Jacui----138  2   -40.6   -11.3    40.3
                                                53.8%                 1243 PReal----230  1    81.2    22.6    80.7 0.987*
```

```
 1243  230  0   1.050     0.0     0.0     0.0     0.0     0.0     0.0
 PReal----230   -52.6     0.0     0.0     0.0     0.0     0.0     0.0
                                              76.9%                 1175 PREAL----2GR  1  -135.0    12.8   129.1 1.025F
                                              47.7%                 1215 Itauba---230  1  -117.7    22.0   114.0
                                              59.1%                 1217 LajeadoY-230  1   140.5   -10.7   134.2
                                              53.1%                 1242 PReal----138  1   -81.2   -19.9    79.6
                                               2.3%                 1250 SAngelo2-230  1    -4.3    -6.3     7.3
                                              34.8%                 1291 Tapera2--230  1    63.5    15.3    62.2
                                              71.7%                 1299 VenAires-230  1   134.1   -13.1   128.4
 1244  138  0   1.002     0.0     0.0     0.0     0.0     0.0     0.0
 Osorio2--138   -72.1     0.0     0.0     0.0     0.0     0.0     0.0
                                              16.2%                 1229 Palmares-138  1    13.1    -2.4    13.3              70
                                              24.6%                 1232 Osorio2---69  1   -13.1     2.4    13.3              70
                                               0.0%                 2055 SAPatrul-138  1     0.0     0.0     0.0              70
 1246  230  0   1.035     0.0     0.0     0.0     0.0    26.8     0.0
 Quinta---230   -69.2     0.0     0.0     0.0     0.0     0.0     0.0
                                               6.9%                 1236 Pelotas3-230  1   -19.4     0.2    18.8
                                              27.1%                 1239 PMedici--230  1   -67.0    -4.4    64.8
                                              27.0%                 1247 Quinta---138  1    12.1    -6.9    13.5 1.041*
                                              48.8%                 1322 Quinta---FIC  1    74.2    37.9    80.5 0.992*
 1247  138  0   1.002     0.0     0.0     0.0     0.0     0.0     0.0
 Quinta---138   -69.9     0.0     0.0     0.0     0.0     0.0     0.0
                                              28.1%                 1246 Quinta---230  1   -12.1     7.1    14.0
                                              28.1%                 1285 Marmelei-138  1    12.1    -7.1    14.0              70
 1248  230  0   1.030     0.0     0.0     0.0     0.0     0.0     0.0
 Canoas2--230   -64.9     0.0     0.0     0.0     0.0     0.0     0.0
                                               0.0%                 1152 CANOAS---000  1     0.0     0.0     0.0 1.000F       39
                                               2.7%                 1210 Gravata2-230  1    -7.3    -3.2     7.8
                                               2.7%                 1258 CInduPAl-230  1     7.3     3.2     7.8
 1249  230  0   1.019     0.0     0.0     0.0     0.0     0.0     0.0
 Taquara--230   -65.8     0.0     0.0     0.0     0.0     0.0     0.0
                                              33.4%                 1191 Caxias-C-230  1  -119.5   -16.2   118.3
                                              13.5%                 1231 Osorio2--230  1    48.6     1.2    47.7
                                              47.4%                 2094 Taquara--138  1    70.9    15.1    71.1 0.995*       32
CEPEL - CENTRO DE PESQUISAS DE ENERGIA ELETRICA - PROGRAMA DE ANALISE DE REDES - V08MAR05A                            PAG. 306

ANUAL 06/07 * SETEMBRO 2006 PESADA S/SE 19H N/NE 19H * ANAT0 - FSE - C13
RELATORIO COMPLETO DO SISTEMA * AREA 23 * *             CEEE                 *

X----------------- D A D O S  -  B A R R A -------------------------X------------ F L U X O S  -  C I R C U I T O S ------------X
 DA BARRA      TENSAO GERACAO INJ EQV  CARGA   ELO CC  SHUNT    MOTOR
 NUM. KV TIPO   MOD/     MW/     MW/     MW/     MW/   Mvar/     MW/
     NOME       ANG     Mvar    Mvar    Mvar    Mvar   EQUIV    Mvar  PARA BARRA                    FLUXOS
                                                FLUXO % SHUNT L         NUM.     NOME     NC     MW    Mvar  MVA/V_d   TAP  DEFAS TIE
X------------X-------X-------X-------X-------X-------X-------X-------X----X------------X--X-------X-------X-------X------X-----X---X

 1250  230  0   1.041     0.0     0.0     0.0     0.0     0.0     0.0
 SAngelo2-230   -52.2     0.0     0.0     0.0     0.0     0.0     0.0
                                              14.2%                 1046 SAngelo--230  1   -47.3    14.5    47.6              20
                                               6.6%                 1243 PReal----230  1     4.3   -21.5    21.1
                                              25.2%                 1251 StoAngelo-69  1    21.5     3.5    20.9 1.035*       32
                                              25.2%                 1251 StoAngelo-69  2    21.5     3.5    20.9 1.035*       32
 1254  230  0   1.035     0.0     0.0     0.0     0.0     0.0     0.0
 SaoBorja-230   -46.2     0.0     0.0     0.0     0.0     0.0     0.0
                                              32.6%                 1225 Macambar-230  1   -87.2    26.3    88.0
                                              36.4%                 1253 SaoBorja--69  1    18.8     1.2    18.2 1.033*       31
                                              29.8%                 2078 Missoes--230  1    68.4   -27.5    71.2
 1255  230  0   1.021     0.0     0.0     0.0     0.0     0.0     0.0
 SCruz1-Y-230   -60.2     0.0     0.0     0.0     0.0     0.0     0.0
                                              48.9%                  951 Charquea-230  1    93.2   -20.6    93.5              20
```

```
                                                 85.2%                 1215 Itauba---230  1  -166.0     6.0   162.7
                                                 26.9%                 1256 StaCruz1-230  1    72.8    14.5    72.7
 1256  230  0   1.016     0.0     0.0     0.0     0.0     0.0     0.0
 StaCruz1-230   -60.9     0.0     0.0     0.0     0.0     0.0     0.0
                                                 27.2%                 1255 SCruz1-Y-230  1   -72.6   -16.8    73.3
                                                 43.9%                 1329 SCruz1-2-FIC  1    36.0     8.3    36.4 1.002*
                                                 44.5%                 2097 StaCruz1-FIC  1    36.6     8.5    36.9 1.002*
 1257  138  0   1.030     0.0     0.0     0.0     0.0     0.0     0.0
 CInduPAl-138   -67.7     0.0     0.0     0.0     0.0     0.0     0.0
                                                 67.3%                 1219 Lansul---138  1    74.5     7.2    72.7                31
                                                 78.5%                 1252 SaoLuis--138  1    87.0     8.7    84.8                31
                                                 76.0%                 1258 CInduPAl-230  1  -115.5   -20.9   114.0 1.010*
                                                 76.0%                 1258 CInduPAl-230  2  -115.5   -20.9   114.0 1.010*
                                                 66.7%                 2068 Cachoeir-138  1    69.6    25.9    72.1                32
CEPEL - CENTRO DE PESQUISAS DE ENERGIA ELETRICA - PROGRAMA DE ANALISE DE REDES - V08MAR05A                                PAG. 307

ANUAL 06/07 * SETEMBRO 2006 PESADA S/SE 19H N/NE 19H * ANAT0 - FSE - C13
RELATORIO COMPLETO DO SISTEMA * AREA 23 * *              CEEE              *

X----------------- D A D O S  -  B A R R A -------------------------X------------ F L U X O S  -  C I R C U I T O S ------------X
 DA BARRA      TENSAO GERACAO INJ EQV  CARGA   ELO CC  SHUNT    MOTOR
 NUM. KV TIPO   MOD/     MW/     MW/     MW/     MW/   Mvar/     MW/
     NOME       ANG     Mvar    Mvar    Mvar    Mvar   EQUIV    Mvar  PARA BARRA                    FLUXOS
                                                FLUXO % SHUNT L        NUM.     NOME     NC     MW    Mvar  MVA/V_d   TAP  DEFAS TIE
X------------X-------X-------X-------X-------X-------X-------X-------X----X------------X--X-------X-------X-------X------X-----X---X

 1258  230  0   1.030     0.0     0.0     0.0     0.0     0.0     0.0
 CInduPAl-230   -64.9     0.0     0.0     0.0     0.0     0.0     0.0
                                                 19.1%                  951 Charquea-230  1   -30.1    22.4    36.5                20
                                                 44.3%                  980 NSRita---230  1  -105.7   -27.1   106.0                20
                                                 44.3%                  980 NSRita---230  2  -105.7   -27.1   106.0                20
                                                 44.3%                  980 NSRita---230  3  -105.7   -27.1   106.0                20
                                                 39.7%                 1204 PoloPetr-230  1   -96.7   -14.4    95.0
                                                  4.2%                 1210 Gravata2-230  1   -11.1    -5.6    12.1
                                                  4.2%                 1210 Gravata2-230  2   -11.1    -5.6    12.1
                                                  4.2%                 1210 Gravata2-230  3   -11.1    -5.6    12.1
                                                 14.7%                 1236 Pelotas3-230  1    28.2   -29.5    39.7
                                                  2.9%                 1248 Canoas2--230  1    -7.3    -4.7     8.5
                                                 76.8%                 1257 CInduPAl-138  1   115.5    26.7   115.1
                                                 76.8%                 1257 CInduPAl-138  2   115.5    26.7   115.1
                                                 34.9%                 1267 PAlegre9-230  1    85.6     7.4    83.4
                                                 10.5%                 1273 Siderurg-230  1    25.4     4.5    25.1                31
                                                 31.2%                 1299 VenAires-230  1   -54.7    17.5    55.8
                                                 82.1%                 9207 CIndustri-23  1    78.3    31.9    82.1 0.991*        31
                                                 32.9%                 9259 Canoa1-D-230  1    90.8     9.6    88.7
 1259  230  0   1.014     0.0     0.0     0.0     0.0     0.0     0.0
 PAlegre4-230   -66.5     0.0     0.0     0.0     0.0     0.0     0.0
                                                 29.9%                 1263 PAlegre6-230  1   -86.3   -43.7    95.4
                                                  4.1%                 1268 PAlegr10-230  1    -7.5    11.1    13.2
                                                 39.2%                 9243 PAlegre4--13  1    93.8    32.6    98.0 0.994*        70
 1260    1  0   1.000     0.0     0.0     0.0     0.0     0.0     0.0
 PAlegr6A-FIC   -72.1     0.0     0.0     0.0     0.0     0.0     0.0
                                                  1.7%                 1179 PAlegre6-1CS  1    -0.3    -0.3     0.4
                                                 73.8%                 1262 PAlegre6--69  1    61.0     5.6    61.2                70
                                                 73.4%                 1263 PAlegre6-230  1   -60.7    -5.3    60.9
 1261    1  0   1.000     0.0     0.0     0.0     0.0     0.0     0.0
 PAlegr6B-FIC   -72.1     0.0     0.0     0.0     0.0     0.0     0.0
                                                  1.5%                 1179 PAlegre6-1CS  1     0.3    -0.3     0.4
                                                 73.6%                 1262 PAlegre6--69  1    60.8     5.7    61.1                70
                                                 73.9%                 1263 PAlegre6-230  1   -61.1    -5.4    61.3
```

```
 1263  230  0   1.018     0.0     0.0     0.0     0.0     0.0     0.0
 PAlegre6-230   -66.2     0.0     0.0     0.0     0.0     0.0     0.0
                                                46.6%                 1210 Gravata2-230  1   -95.5   -28.3    97.8
                                                46.6%                 1210 Gravata2-230  2   -95.5   -28.3    97.8
                                                29.8%                 1210 Gravata2-230  3   -92.2   -29.5    95.0
                                                29.6%                 1259 PAlegre4-230  1    86.5    42.4    94.5
                                                73.1%                 1260 PAlegr6A-FIC  1    60.7    11.8    60.7 1.004*
                                                73.6%                 1261 PAlegr6B-FIC  1    61.1    11.8    61.1 1.004*
                                                15.8%                 1270 PAlegr13-230  1    42.3    10.3    42.8
                                                66.8%                 9244 PAlegre6--13  1    32.6     9.7    33.4 0.996*        70
CEPEL - CENTRO DE PESQUISAS DE ENERGIA ELETRICA - PROGRAMA DE ANALISE DE REDES - V08MAR05A                                PAG. 308

ANUAL 06/07 * SETEMBRO 2006 PESADA S/SE 19H N/NE 19H * ANAT0 - FSE - C13
RELATORIO COMPLETO DO SISTEMA * AREA 23 * *              CEEE                 *

X----------------- D A D O S  -  B A R R A ------------------------X------------ F L U X O S  -  C I R C U I T O S ------------X
 DA BARRA      TENSAO GERACAO INJ EQV  CARGA   ELO CC  SHUNT    MOTOR
 NUM. KV TIPO   MOD/     MW/     MW/     MW/     MW/   Mvar/     MW/
     NOME       ANG     Mvar    Mvar    Mvar    Mvar   EQUIV    Mvar  PARA BARRA                  FLUXOS
                                                FLUXO % SHUNT L        NUM.     NOME     NC     MW    Mvar  MVA/V_d   TAP  DEFAS TIE
X------------X-------X-------X-------X-------X-------X-------X-------X----X------------X--X-------X-------X-------X------X-----X---X

 1264  230  0   1.027     0.0     0.0     0.0     0.0     0.0     0.0
 PAlegre8-230   -65.7     0.0     0.0     0.0     0.0     0.0     0.0
                                                26.9%                 1210 Gravata2-230  1   -90.8    -6.5    88.7
                                                53.4%                 1271 PAlegre8--69  1    45.4     3.3    44.3 1.024*        70
                                                53.4%                 1271 PAlegre8--69  2    45.4     3.3    44.3 1.024*        70
 1265    1  0   1.002     0.0     0.0     0.0     0.0     0.0     0.0
 PAlegre9-FIC   -69.8     0.0     0.0     0.0     0.0     0.0     0.0
                                                 0.0%                 1180 PAlegre9--13  1     0.0     0.0     0.0
                                                34.6%                 1266 PAlegre9--69  1    56.9     6.3    57.1               70
                                                34.6%                 1267 PAlegre9-230  1   -56.9    -6.3    57.1
 1267  230  0   1.026     0.0     0.0     0.0     0.0     0.0     0.0
 PAlegre9-230   -65.5     0.0     0.0     0.0     0.0     0.0     0.0
                                                20.3%                 1212 Eldorado-230  1    48.7   -10.6    48.6
                                                35.0%                 1258 CInduPAl-230  1   -85.4    -9.4    83.7
                                                34.2%                 1265 PAlegre9-FIC  1    56.9    10.6    56.4 1.013*
                                                50.9%                 1352 PAlegre9--13  1    31.1     3.9    30.5 1.019*        70
                                                18.6%                 9259 Canoa1-D-230  1   -51.3     5.5    50.3
 1268  230  0   1.013     0.0     0.0     0.0     0.0     0.0     0.0
 PAlegr10-230   -66.5     0.0     0.0     0.0     0.0     0.0     0.0
                                                32.8%                 1210 Gravata2-230  1   -99.9   -35.6   104.6
                                                 4.3%                 1259 PAlegre4-230  1     7.5   -11.7    13.7
                                                75.5%                 1269 PAlegre10-69  1    54.7    32.3    62.7 0.961*        70
                                                 0.0%                 1269 PAlegre10-69  2     0.0     0.0     0.0 0.988*        70
                                                80.0%                 9245 PAlegre10-13  1    37.7    14.9    40.0 0.980*        70
 1270  230  0   1.017     0.0     0.0     0.0     0.0     0.0     0.0
 PAlegr13-230   -66.3     0.0     0.0     0.0     0.0     0.0     0.0
                                                16.0%                 1263 PAlegre6-230  1   -42.3   -11.6    43.1
                                                21.6%                 9246 PAlegre13-13  1    21.1     5.8    21.6 1.003*        70
                                                43.1%                 9246 PAlegre13-13  2    21.1     5.8    21.6 1.003*        70
 1278  230  0   1.027     0.0     0.0     0.0     0.0     0.0     0.0
 SMaria3--230   -50.7     0.0     0.0     0.0     0.0     0.0     0.0
                                                16.8%                 1223 DFrancis-230  1   -18.7   -36.8    40.2
                                                19.2%                 1286 SVicente-230  1   -52.4    22.9    55.7
                                                42.5%                 2087 StaMaria3-69  1    35.5     7.0    35.3 0.986*        31
                                                42.5%                 2087 StaMaria3-69  2    35.5     7.0    35.3 0.986*        31
CEPEL - CENTRO DE PESQUISAS DE ENERGIA ELETRICA - PROGRAMA DE ANALISE DE REDES - V08MAR05A                                PAG. 309

ANUAL 06/07 * SETEMBRO 2006 PESADA S/SE 19H N/NE 19H * ANAT0 - FSE - C13
```

```
RELATORIO COMPLETO DO SISTEMA * AREA 23 * *              CEEE                *

X----------------- D A D O S  -  B A R R A ------------------------X------------ F L U X O S  -  C I R C U I T O S ------------X
 DA BARRA      TENSAO GERACAO INJ EQV  CARGA   ELO CC  SHUNT    MOTOR
 NUM. KV TIPO   MOD/     MW/     MW/     MW/     MW/   Mvar/     MW/
     NOME       ANG     Mvar    Mvar    Mvar    Mvar   EQUIV    Mvar  PARA BARRA                    FLUXOS
                                                FLUXO % SHUNT L         NUM.     NOME     NC     MW    Mvar  MVA/V_d   TAP  DEFAS TIE
X------------X-------X-------X-------X-------X-------X-------X-------X----X------------X--X-------X-------X-------X------X-----X---X

 1281  230  0   1.017     0.0     0.0     0.0     0.0     0.0     0.0
 StaMarta-230   -54.6     0.0     0.0     0.0     0.0     0.0     0.0
                                              21.8%                   1041 PFundo---230  1    36.1   -29.5    45.9               20
                                              39.7%                   1275 StaMarta-138  1    26.9    13.8    29.8               32
                                              39.7%                   1275 StaMarta-138  2    26.9    13.8    29.8               32
                                              66.0%                   1279 StaMarta--69  1    53.5    15.7    54.8 0.949*        32
                                              17.4%                   1291 Tapera2--230  1   -14.6   -28.2    31.2
                                              43.7%                   1325 LVermelh-230  1  -128.9    14.5   127.5
 1283  230  0   1.032     0.0     0.0     0.0     0.0     0.0     0.0
 StaRosa--230   -54.1     0.0     0.0     0.0     0.0     0.0     0.0
                                              23.8%                   1046 SAngelo--230  1   -80.8    -4.4    78.4               20
                                              21.9%                   1046 SAngelo--230  2   -80.8    -4.4    78.4               20
                                              28.4%                   1213 Guarita--230  1    73.2    -6.0    71.2
                                              52.3%                   1282 StaRosa---69  1    44.2     7.4    43.4 1.007*        32
                                              52.3%                   1282 StaRosa---69  2    44.2     7.4    43.4 1.007*        32
 1286  230  0   1.012     0.0     0.0     0.0     0.0     0.0     0.0
 SVicente-230   -48.2     0.0     0.0     0.0     0.0     0.0     0.0
                                              38.1%                   1186 Alegret2-230  1  -111.4    10.7   110.6
                                              21.6%                   1278 SMaria3--230  1    52.9   -34.9    62.6
                                              63.6%                   1289 SVicente--69  1    29.7    12.3    31.8 0.984*        31
                                              61.5%                   1289 SVicente--69  2    28.8    11.9    30.8 0.984*        31
 1291  230  0   1.033     0.0     0.0     0.0     0.0     0.0     0.0
 Tapera2--230   -54.4     0.0     0.0     0.0     0.0     0.0     0.0
                                              36.5%                   1243 PReal----230  1   -63.1   -23.7    65.3
                                              12.6%                   1281 StaMarta-230  1    14.7    18.0    22.5
                                              28.4%                   1292 Tapera2---69  1    24.2     2.8    23.6 1.028*        32
                                              28.4%                   1292 Tapera2---69  2    24.2     2.8    23.6 1.028*        32
 1294  230  0   1.028     0.0     0.0     0.0     0.0     0.0     0.0
 Uruguaia-230   -34.3     0.0     0.0     0.0     0.0     0.0     0.0
                                              86.4%                   1164 URUGUAIG-2GR  1  -353.7    33.9   345.6 1.025F        34
                                              57.3%                   1165 URUGUAIV-1GR  1  -176.2    14.4   172.0 1.025F        34
                                              34.9%                   1186 Alegret2-230  1   225.7   -37.2   222.4
                                              36.0%                   1225 Macambar-230  1   161.4   -23.4   158.6
                                              35.1%                   1296 Uruguai5-230  1   143.0    12.2   139.5
 1296  230  0   1.027     0.0     0.0     0.0     0.0     0.0     0.0
 Uruguai5-230   -34.7     0.0     0.0     0.0     0.0     0.0     0.0
                                              12.0%                   1067 UruguaCF-230  1     0.0    25.9    25.2               20
                                              40.0%                   1186 Alegret2-230  1   109.3   -19.4   108.1
                                              35.1%                   1294 Uruguaia-230  1  -142.8   -12.2   139.6
                                              20.0%                   1295 Uruguaia5-69  1    16.7     2.9    16.6 1.002*        31
                                              20.0%                   1295 Uruguaia5-69  2    16.7     2.9    16.6 1.002*        31
CEPEL - CENTRO DE PESQUISAS DE ENERGIA ELETRICA - PROGRAMA DE ANALISE DE REDES - V08MAR05A                                  PAG. 310

ANUAL 06/07 * SETEMBRO 2006 PESADA S/SE 19H N/NE 19H * ANAT0 - FSE - C13
RELATORIO COMPLETO DO SISTEMA * AREA 23 * *              CEEE                *

X----------------- D A D O S  -  B A R R A ------------------------X------------ F L U X O S  -  C I R C U I T O S ------------X
 DA BARRA      TENSAO GERACAO INJ EQV  CARGA   ELO CC  SHUNT    MOTOR
 NUM. KV TIPO   MOD/     MW/     MW/     MW/     MW/   Mvar/     MW/
     NOME       ANG     Mvar    Mvar    Mvar    Mvar   EQUIV    Mvar  PARA BARRA                    FLUXOS
                                                FLUXO % SHUNT L         NUM.     NOME     NC     MW    Mvar  MVA/V_d   TAP  DEFAS TIE
```

```
X------------X-------X-------X-------X-------X-------X-------X-------X----X------------X--X-------X-------X-------X------X-----X---X

 1297    1  0   1.041     0.0     0.0     0.0     0.0     0.0     0.0
 VenAires-FIC   -65.1     0.0     0.0     0.0     0.0     0.0     0.0
                                                 8.8%                    1181 VenAires-1CS  1     0.0     2.7     2.6
                                                47.9%                    1298 VenAires--69  1    36.8     6.7    35.9                31
                                                48.7%                    1299 VenAires-230  1   -36.8    -9.5    36.5
 1299  230  0   1.020     0.0     0.0     0.0     0.0     0.0     0.0
 VenAires-230   -61.6     0.0     0.0     0.0     0.0     0.0     0.0
                                                70.6%                    1243 PReal----230  1  -128.6     8.3   126.4
                                                35.1%                    1258 CInduPAl-230  1    55.6   -32.0    62.9
                                                50.5%                    1297 VenAires-FIC  1    36.8    11.9    37.9 0.963*
                                                49.8%                    1298 VenAires--69  1    36.2    11.8    37.3 0.963*         31
 1322    1  0   1.001     0.0     0.0     0.0     0.0     0.0     0.0
 Quinta---FIC   -74.4     0.0     0.0     0.0     0.0     0.0     0.0
                                                48.4%                    1245 Quinta----69  1    74.2    29.7    79.8 1.000F         70
                                                48.4%                    1246 Quinta---230  1   -74.2   -29.7    79.8
                                                 0.0%                    1323 Quinta----13  1     0.0     0.0     0.0 1.000F
 1323    1  0   1.001     0.0     0.0     0.0     0.0     0.0     0.0
 Quinta----13   -74.4     0.0     0.0     0.0     0.0     0.0     0.0
                                                 0.0%                    1322 Quinta---FIC  1     0.0     0.0     0.0
 1325  230  0   1.024     0.0     0.0     0.0     0.0     0.0     0.0
 LVermelh-230   -48.0     0.0     0.0     0.0     0.0     0.0     0.0
                                                39.5%                     936 BGrande--230  1  -213.3    47.1   213.3                64
                                                44.4%                    1281 StaMarta-230  1   131.6   -16.7   129.5
                                                56.8%                    1326 LVermel2-138  1    81.7   -30.5    85.2 1.045*         32
 1327    1  0   1.001     0.0     0.0     0.0     0.0     0.0     0.0
 Lajeado2-FIC   -66.7     0.0     0.0     0.0     0.0     0.0     0.0
                                                56.0%                    1218 Lajeado2-230  1   -46.2    -5.7    46.5
                                                43.0%                    2081 Lajeado---69  1    35.5     3.3    35.7 1.000F         31
                                                40.5%                    2083 Lajeado---13  1    10.7     2.4    10.9 1.000F         31
 1329    1  0   1.001     0.0     0.0     0.0     0.0     0.0     0.0
 SCruz1-2-FIC   -64.5     0.0     0.0     0.0     0.0     0.0     0.0
                                                44.0%                    1256 StaCruz1-230  1   -36.0    -6.0    36.5
                                                55.1%                    2076 StaCruz1--13  1    14.5     3.2    14.9 1.000F         31
                                                26.1%                    2088 StaCruz1--69  1    21.5     2.7    21.7 1.000F         31
 1350   69  0   1.002     0.0     0.0     0.0     0.0     0.0     0.0
 Canguçu--694   -75.5     0.0     0.0     0.0     0.0     0.0     0.0
                                                 0.0%                    1380 Pelotas4--69  1     0.0     0.0     0.0                 70
CEPEL - CENTRO DE PESQUISAS DE ENERGIA ELETRICA - PROGRAMA DE ANALISE DE REDES - V08MAR05A                                   PAG. 311

ANUAL 06/07 * SETEMBRO 2006 PESADA S/SE 19H N/NE 19H * ANAT0 - FSE - C13
RELATORIO COMPLETO DO SISTEMA * AREA 23 * *              CEEE              *

X----------------- D A D O S  -  B A R R A -------------------------X------------ F L U X O S  -  C I R C U I T O S ------------X
 DA BARRA      TENSAO GERACAO INJ EQV  CARGA   ELO CC  SHUNT    MOTOR
 NUM. KV TIPO   MOD/     MW/     MW/     MW/     MW/   Mvar/     MW/
     NOME       ANG     Mvar    Mvar    Mvar    Mvar   EQUIV    Mvar  PARA BARRA                   FLUXOS
                                                FLUXO % SHUNT L         NUM.     NOME     NC     MW    Mvar  MVA/V_d   TAP  DEFAS TIE
X------------X-------X-------X-------X-------X-------X-------X-------X----X------------X--X-------X-------X-------X------X-----X---X

 2051    1  1   1.000    37.0     0.0     0.0     0.0     0.0     0.0
 Canastra-2GR   -62.1    -0.7     0.0     0.0     0.0     0.0     0.0
                                                37.0%                    2060 CanastrB-FIC  1    18.5    -0.3    18.5 1.000F
                                                37.0%                    2062 CanastrA-FIC  1    18.5    -0.3    18.5 1.000F
 2052    1  1   1.020     0.0     0.0     0.0     0.0     0.0     0.0
 Cachoeir-1CS   -68.5    -5.5     0.0     0.0     0.0     0.0     0.0
                                                10.7%                    2066 Cachoeir-FIC  1     0.0    -5.5     5.4 0.957F
 2060    1  0   1.009     0.0     0.0     0.0     0.0     0.0     0.0
 CanastrB-FIC   -68.8     0.0     0.0     0.0     0.0     0.0     0.0
```

```
                                                  37.0%                 2051 Canastra-2GR  1   -18.5     2.5    18.5
                                                  23.6%                 2063 Canastra--69  1    -5.0     0.4     5.0                32
                                                  67.0%                 2064 Canastra-138  1    23.5    -2.9    23.5
 2062    1  0   1.009     0.0     0.0     0.0     0.0     0.0     0.0
 CanastrA-FIC   -68.8     0.0     0.0     0.0     0.0     0.0     0.0
                                                  37.0%                 2051 Canastra-2GR  1   -18.5     2.5    18.5
                                                  23.6%                 2063 Canastra--69  1    -5.0     0.4     5.0                32
                                                  67.0%                 2064 Canastra-138  1    23.5    -2.9    23.5
 2064  138  0   1.008     0.0     0.0     0.0     0.0     0.0     0.0
 Canastra-138   -68.5     0.0     0.0     0.0     0.0     0.0     0.0
                                                  21.1%                 1290 3Coroas--138  1    10.8   -10.9    15.2                32
                                                  67.0%                 2060 CanastrB-FIC  1   -23.5     2.7    23.5 1.000F
                                                  67.0%                 2062 CanastrA-FIC  1   -23.5     2.7    23.5 1.000F
                                                  33.6%                 2065 Canastr2-138  1    36.2     5.4    36.3                32
 2066    1  0   1.069     0.0     0.0     0.0     0.0     0.0     0.0
 Cachoeir-FIC   -68.5     0.0     0.0     0.0     0.0     0.0     0.0
                                                  10.3%                 2052 Cachoeir-1CS  1     0.0     5.5     5.1
                                                   5.8%                 2067 Cachoeiri-69  1    -1.1     6.7     6.4                31
                                                  10.4%                 2068 Cachoeir-138  1     1.1   -12.2    11.5                32
 2078  230  0   1.042     0.0     0.0     0.0     0.0     0.0     0.0
 Missoes--230   -49.9     0.0     0.0     0.0     0.0     0.0     0.0
                                                  22.4%                 1046 SAngelo--230  1    53.7   -15.1    53.5                20
                                                  27.6%                 1254 SaoBorja-230  1   -67.5    13.3    66.0
                                                  26.7%                 2079 Missoes---69  1    13.8     1.8    13.4 0.989*        32
 2085    1  0   1.001     0.0     0.0     0.0     0.0     0.0     0.0
 Lajeado--FIC   -66.7     0.0     0.0     0.0     0.0     0.0     0.0
                                                  56.6%                 1218 Lajeado2-230  1   -46.7    -5.7    47.0
                                                  43.5%                 2081 Lajeado---69  1    36.0     3.3    36.1 1.000F        31
                                                  40.7%                 2083 Lajeado---13  1    10.7     2.4    11.0 1.000F        31
CEPEL - CENTRO DE PESQUISAS DE ENERGIA ELETRICA - PROGRAMA DE ANALISE DE REDES - V08MAR05A                                PAG. 312

ANUAL 06/07 * SETEMBRO 2006 PESADA S/SE 19H N/NE 19H * ANAT0 - FSE - C13
RELATORIO COMPLETO DO SISTEMA * AREA 23 * *              CEEE                 *

X----------------- D A D O S  -  B A R R A ------------------------X------------ F L U X O S  -  C I R C U I T O S ------------X
 DA BARRA       TENSAO GERACAO INJ EQV  CARGA   ELO CC  SHUNT    MOTOR
 NUM. KV TIPO    MOD/     MW/     MW/     MW/     MW/   Mvar/     MW/
     NOME        ANG     Mvar    Mvar    Mvar    Mvar   EQUIV    Mvar  PARA BARRA                    FLUXOS
                                                FLUXO % SHUNT L         NUM.     NOME     NC     MW    Mvar  MVA/V_d   TAP  DEFAS TIE
X------------X-------X-------X-------X-------X-------X-------X-------X----X------------X--X-------X-------X-------X------X-----X---X

 2086  230  0   1.029     0.0     0.0     0.0     0.0     0.0     0.0
 Scharlau-230   -64.0     0.0     0.0     0.0     0.0     0.0     0.0
                                                   4.2%                  951 Charquea-230  1     5.5     5.3     7.4                20
                                                  15.8%                  962 Farroupi-230  1   -28.2    -7.5    28.4                20
                                                  44.3%                 9209 Scharlau--23  1    22.7     2.2    22.2 1.025*        31
 2089    1 -1   1.021     0.0     0.0     0.0     0.0     0.0     0.0
 Scharlau--13   -69.7     0.0     0.0     0.0     0.0     0.0     0.0
                                                   0.0%                 2093 Scharlau-FIC  1     0.0     0.0     0.0 1.000F
 2093    1  0   1.021     0.0     0.0     0.0     0.0     0.0     0.0
 Scharlau-FIC   -69.7     0.0     0.0     0.0     0.0     0.0     0.0
                                                   0.0%                 2089 Scharlau--13  1     0.0     0.0     0.0
                                                   0.0%                 2090 Scharlau-138  1     0.0     0.0     0.0                31
                                                   0.0%                 2091 Scharlau--69  1     0.0     0.0     0.0                31
 2097    1  0   1.001     0.0     0.0     0.0     0.0     0.0     0.0
 StaCruz1-FIC   -64.5     0.0     0.0     0.0     0.0     0.0     0.0
                                                  44.6%                 1256 StaCruz1-230  1   -36.6    -6.1    37.0
                                                  58.2%                 2076 StaCruz1--13  1    15.4     3.4    15.7 1.000F        31
                                                  25.7%                 2088 StaCruz1--69  1    21.2     2.7    21.3 1.000F        31
 9202    1  0   1.000     0.0     0.0     0.0     0.0     0.0     0.0
```

```
 Livramen-FIC   -54.5     0.0     0.0     0.0     0.0     0.0     0.0
                                                37.3%                 1230 Livramen-230  1   -17.4    -6.7    18.6
                                                50.8%                 9203 Livrament-13  1     7.8     3.7     8.6              31
                                                20.1%                 9204 Livrament-69  1     9.6     3.0    10.1              31
 9259  230  0   1.026     0.0     0.0     0.0     0.0     0.0     0.0
 Canoa1-D-230   -65.5     0.0     0.0     0.0     0.0     0.0     0.0
                                                15.5%                 1190 Canoas1--230  1    39.3    17.0    41.7
                                                33.0%                 1258 CInduPAl-230  1   -90.7   -11.2    89.0
                                                18.6%                 1267 PAlegre9-230  1    51.4    -5.8    50.3


TOTAIS DA AREA 23


X--------X--------X--------X--------X--------X--------X--------X--------X
  GERACAO  INJ EQV   CARGA   ELO CC    SHUNT   EXPORT   IMPORT   PERDAS
    MW/      MW/      MW/      MW/     Mvar/     MW/      MW/      MW/
   Mvar     Mvar     Mvar     Mvar     EQUIV    Mvar     Mvar     Mvar
X--------X--------X--------X--------X--------X--------X--------X--------X

    784.0      0.0      0.0      0.0    155.6   4048.4   3339.6     75.2
     60.3      0.0      0.0      0.0      0.0    818.4    470.2   -132.3
CEPEL - CENTRO DE PESQUISAS DE ENERGIA ELETRICA - PROGRAMA DE ANALISE DE REDES - V08MAR05A                                PAG. 313

ANUAL 06/07 * SETEMBRO 2006 PESADA S/SE 19H N/NE 19H * ANAT0 - FSE - C13
RELATORIO COMPLETO DO SISTEMA * AREA 24 * *             CGTEE                *

X----------------- D A D O S  -  B A R R A ------------------------X------------ F L U X O S  -  C I R C U I T O S ------------X
 DA BARRA      TENSAO GERACAO INJ EQV  CARGA   ELO CC  SHUNT    MOTOR
 NUM. KV TIPO   MOD/     MW/     MW/     MW/     MW/   Mvar/     MW/
     NOME       ANG     Mvar    Mvar    Mvar    Mvar   EQUIV    Mvar  PARA BARRA                   FLUXOS
                                                FLUXO % SHUNT L         NUM.     NOME     NC     MW    Mvar  MVA/V_d   TAP  DEFAS TIE
X------------X-------X-------X-------X-------X-------X-------X-------X----X------------X--X-------X-------X-------X------X-----X---X

 1170    1  1   1.015    50.0     0.0     5.0     0.0     0.0     0.0
 PMEDICIA-1GR   -60.8    -0.1     0.0     2.5     0.0     0.0     0.0
                                                26.8%                 1239 PMedici--230  1    45.0    -2.6    44.4              23
 1172    1  1   1.015   105.0     0.0    10.5     0.0     0.0     0.0
 PMEDICIB-1GR   -60.8    -0.3     0.0     5.2     0.0     0.0     0.0
                                                24.8%                 1239 PMedici--230  1    94.5    -5.5    93.3              23


TOTAIS DA AREA 24


X--------X--------X--------X--------X--------X--------X--------X--------X
  GERACAO  INJ EQV   CARGA   ELO CC    SHUNT   EXPORT   IMPORT   PERDAS
    MW/      MW/      MW/      MW/     Mvar/     MW/      MW/      MW/
   Mvar     Mvar     Mvar     Mvar     EQUIV    Mvar     Mvar     Mvar
X--------X--------X--------X--------X--------X--------X--------X--------X

    155.0      0.0     15.5      0.0      0.0    139.5      0.0      0.0
     -0.4      0.0      7.7      0.0      0.0      0.0      8.2      0.0
CEPEL - CENTRO DE PESQUISAS DE ENERGIA ELETRICA - PROGRAMA DE ANALISE DE REDES - V08MAR05A                                PAG. 314

ANUAL 06/07 * SETEMBRO 2006 PESADA S/SE 19H N/NE 19H * ANAT0 - FSE - C13
RELATORIO COMPLETO DO SISTEMA * AREA 25 * *             CELESC               *
```

```
X----------------- D A D O S  -  B A R R A -------------------------X------------ F L U X O S  -  C I R C U I T O S ------------X
 DA BARRA      TENSAO GERACAO INJ EQV  CARGA   ELO CC  SHUNT    MOTOR
 NUM. KV TIPO   MOD/     MW/     MW/     MW/     MW/   Mvar/     MW/
     NOME       ANG     Mvar    Mvar    Mvar    Mvar   EQUIV    Mvar  PARA BARRA                    FLUXOS
                                                FLUXO % SHUNT L         NUM.     NOME     NC     MW    Mvar  MVA/V_d   TAP  DEFAS TIE
X------------X-------X-------X-------X-------X-------X-------X-------X----X------------X--X-------X-------X-------X------X-----X---X

  948  138  0   1.030     0.0     0.0     0.0     0.0     0.0     0.0
 Biguacu--138   -78.2     0.0     0.0     0.0     0.0     0.0     0.0
                                                45.5%                   947 Biguacu--230  1   -65.6   -25.4    68.3 1.031*        20
                                                29.3%                   967 Floriano-138  1    20.8    27.0    33.1               20
                                                14.6%                  2709 BiguacuC-138  1    22.0     1.2    21.4
                                                19.7%                  2865 TijucasY-138  1    22.7    -2.8    22.2
 2706  138  0   1.000     0.0     0.0     0.0     0.0     0.0     0.0
 Desterro-138   -79.3     0.0     0.0     0.0     0.0     0.0     0.0
                                                36.3%                   945 Desterro-230  1   -48.6    24.6    54.5 0.955*        20
                                                23.2%                  2768 IlhaSul--138  1    31.2   -13.9    34.2
                                                13.9%                  2872 Trindade-138  1    17.4   -10.7    20.4
 2709  138  0   1.029     0.0     0.0    22.0     0.0     0.0     0.0
 BiguacuC-138   -78.5     0.0     0.0     1.7     0.0     0.0     0.0
                                                14.6%                   948 Biguacu--138  1   -22.0    -1.7    21.5
 2710  138  0   1.029     0.0     0.0     9.2     0.0     0.0     0.0
 BluGarci-138   -75.2     0.0     0.0    -1.1     0.0     0.0     0.0
                                                38.1%                   940 Blumenau-138  1   -49.7    -2.0    48.4               20
                                                38.1%                   940 Blumenau-138  2   -49.7    -2.0    48.4               20
                                                47.2%                  2711 BluGarcia-69  1    47.1     7.0    46.3 1.002*
                                                25.5%                  2714 BluVelha-138  1    18.4     4.2    18.4
                                                17.3%                  2717 BrusqRBr-138  1    24.7    -6.0    24.7
 2711   69  0   1.021     0.0     0.0    47.1     0.0     0.0     0.0
 BluGarcia-69   -77.8     0.0     0.0     4.8     0.0     0.0     0.0
                                                47.3%                  2710 BluGarci-138  1   -47.1    -4.8    46.4
 2712  138  0   1.039     0.0     0.0    36.9     0.0     5.2     0.0
 Blumena2-138   -73.6     0.0     0.0     7.3     0.0     0.0     0.0
                                                33.0%                   940 Blumenau-138  1   -97.6   -10.7    94.4               20
                                                32.5%                   940 Blumenau-138  2   -96.4    -4.0    92.8               20
                                                38.4%                  2713 Blumenau2-69  1    52.9     4.7    51.1 1.024F
                                                26.4%                  2784 JaraRLuz-138  1    53.0     3.4    51.1
                                                26.6%                  2811 Malwee2Y-138  1    51.2     4.5    49.4
 2713   69  0   1.013     0.0     0.0     4.8     0.0     1.2     0.0
 Blumenau2-69   -75.1     0.0     0.0     1.8     0.0     0.0     0.0
                                                39.3%                  2712 Blumena2-138  1   -52.9    -3.2    52.3
                                                38.3%                  2851 BlumSalto-69  1    24.0     1.3    23.8
                                                38.3%                  2851 BlumSalto-69  2    24.0     1.3    23.8
 2714  138  0   1.027     0.0     0.0    18.4     0.0     0.0     0.0
 BluVelha-138   -75.4     0.0     0.0     4.8     0.0     0.0     0.0
                                                25.7%                  2710 BluGarci-138  1   -18.4    -4.8    18.5
CEPEL - CENTRO DE PESQUISAS DE ENERGIA ELETRICA - PROGRAMA DE ANALISE DE REDES - V08MAR05A                                PAG. 315

ANUAL 06/07 * SETEMBRO 2006 PESADA S/SE 19H N/NE 19H * ANAT0 - FSE - C13
RELATORIO COMPLETO DO SISTEMA * AREA 25 * *            CELESC              *

X----------------- D A D O S  -  B A R R A -------------------------X------------ F L U X O S  -  C I R C U I T O S ------------X
 DA BARRA      TENSAO GERACAO INJ EQV  CARGA   ELO CC  SHUNT    MOTOR
 NUM. KV TIPO   MOD/     MW/     MW/     MW/     MW/   Mvar/     MW/
     NOME       ANG     Mvar    Mvar    Mvar    Mvar   EQUIV    Mvar  PARA BARRA                    FLUXOS
                                                FLUXO % SHUNT L         NUM.     NOME     NC     MW    Mvar  MVA/V_d   TAP  DEFAS TIE
X------------X-------X-------X-------X-------X-------X-------X-------X----X------------X--X-------X-------X-------X------X-----X---X

 2717  138  0   1.026     0.0     0.0    31.4     0.0     5.1     0.0
 BrusqRBr-138   -76.2     0.0     0.0     3.8     0.0     0.0     0.0
```

```
                                                 17.0%                 2710 BluGarci-138  1   -24.6     4.7    24.4
                                                  5.2%                 2718 Brusque--138  1    -6.8    -3.4     7.4
 2718  138  0   1.027     0.0     0.0    37.8     0.0     5.1     0.0
 Brusque--138   -76.1     0.0     0.0     2.6     0.0     0.0     0.0
                                                 21.7%                  992 Itajai---138  1   -31.8     1.7    31.0                20
                                                  5.0%                 2717 BrusqRBr-138  1     6.8     2.9     7.2
                                                  8.9%                 2778 Itaipava-138  1   -12.9    -2.1    12.7
 2719  138  0   0.996     0.0     0.0     3.1     0.0     0.0     0.0
 Cebrasc--138   -69.5     0.0     0.0     0.6     0.0     0.0     0.0
                                                 24.9%                 2820 OrleansF-138  1    23.1   -21.3    31.6
                                                 36.1%                 2889 VRamosJr-138  1   -26.2    20.7    33.5
 2721  138  0   1.018     0.0     0.0     7.0     0.0     0.0     0.0
 Cebrace--138   -77.7     0.0     0.0     2.8     0.0     0.0     0.0
                                                  0.0%                 2726 Cebrac1Y-138  1     0.0     0.0     0.0
                                                  4.8%                 2727 Cebrac2Y-138  1    -7.0    -2.8     7.4
 2722  138  0   0.995     0.0     0.0    34.2     0.0    14.3     0.0
 Cacador--138   -65.1     0.0     0.0     3.1     0.0     0.0     0.0
                                                 31.7%                 2892 Videira--138  1   -17.1     5.6    18.1
                                                 31.7%                 2892 Videira--138  2   -17.1     5.6    18.1
 2723  138  0   1.033     0.0     0.0    20.0     0.0     0.0     0.0
 CambMBoi-138   -77.6     0.0     0.0   -15.4     0.0     0.0     0.0
                                                 32.5%                  992 Itajai---138  1   -52.4    17.8    53.6                20
                                                 27.9%                 2865 TijucasY-138  1    32.4    -2.4    31.5
 2725  138  0   1.029     0.0     0.0    17.0     0.0     3.2     0.0
 Canoinha-138   -74.8     0.0     0.0    -2.1     0.0     0.0     0.0
                                                 47.6%                  943 Canoinha-230  1   -36.3     5.6    35.7 1.005*         20
                                                 47.2%                  943 Canoinha-230  2   -36.1     5.4    35.4 1.005*         20
                                                 48.1%                  943 Canoinha-230  3   -36.7     5.6    36.1 1.005*         20
                                                 52.2%                 2741 CiaCanoi-138  1    24.2     8.8    25.0
                                                 27.1%                 2808 Mafra----138  1    33.9   -10.1    34.4
                                                 27.1%                 2808 Mafra----138  2    33.9   -10.1    34.4
 2726  138  0   1.024     0.0     0.0     0.0     0.0     0.0     0.0
 Cebrac1Y-138   -76.6     0.0     0.0     0.0     0.0     0.0     0.0
                                                 17.3%                  985 Ilhota---138  1   -16.5    -4.2    16.6                20
                                                 17.3%                 1016 Joinvill-138  1    16.5     4.2    16.6                20
                                                  0.0%                 2721 Cebrace--138  1     0.0     0.0     0.0
CEPEL - CENTRO DE PESQUISAS DE ENERGIA ELETRICA - PROGRAMA DE ANALISE DE REDES - V08MAR05A                                PAG. 316

ANUAL 06/07 * SETEMBRO 2006 PESADA S/SE 19H N/NE 19H * ANAT0 - FSE - C13
RELATORIO COMPLETO DO SISTEMA * AREA 25 * *             CELESC               *

X------------------ D A D O S  -  B A R R A -------------------------X------------- F L U X O S  -  C I R C U I T O S -------------X
 DA BARRA      TENSAO GERACAO INJ EQV  CARGA   ELO CC  SHUNT    MOTOR
 NUM. KV TIPO   MOD/     MW/     MW/     MW/     MW/   Mvar/     MW/
     NOME       ANG     Mvar    Mvar    Mvar    Mvar   EQUIV    Mvar  PARA BARRA                    FLUXOS
                                                FLUXO % SHUNT L         NUM.     NOME     NC     MW    Mvar  MVA/V_d   TAP  DEFAS TIE
X------------X-------X-------X-------X-------X-------X-------X-------X----X------------X--X-------X-------X-------X------X-----X---X

 2727  138  0   1.019     0.0     0.0     0.0     0.0     0.0     0.0
 Cebrac2Y-138   -77.7     0.0     0.0     0.0     0.0     0.0     0.0
                                                  4.8%                 2721 Cebrace--138  1     7.0     2.6     7.3
                                                  7.1%                 2799 JoinviSC-138  1     5.5     3.0     6.1
                                                 15.6%                 2830 Picarras-138  1   -12.5    -5.6    13.4
 2729  138  0   1.015     0.0     0.0    12.3     0.0     4.9     0.0
 Catanduv-138   -61.4     0.0     0.0     2.9     0.0     0.0     0.0
                                                  7.5%                 2760 Herval---138  1    -3.2     9.1     9.5
                                                  8.9%                 2896 Xanxere--138  1    -9.1    -7.0    11.4
 2731  138  0   1.003     0.0     0.0    35.4     0.0     0.0     0.0
 Chapeco2-138   -63.1     0.0     0.0     3.7     0.0     0.0     0.0
                                                 29.9%                 2848 SadiaCha-138  1    13.2     5.7    14.3
```

```
                                                  53.1%                 2896 Xanxere--138  1   -48.6    -9.4    49.3
 2733  138  0   1.016     2.5     0.0    20.1     0.0     5.0     0.0
 CNovos---138   -59.4     0.0     0.0     8.7     0.0     0.0     0.0
                                                  64.0%                 2750 CNovos1Y-138  1   -81.9    10.6    81.3
                                                  51.1%                 2889 VRamosJr-138  1    64.3   -14.4    64.9
 2735   69  0   0.972     0.0     0.0    30.3     0.0     0.0     0.0
 Coqueiros-69   -81.1     0.0     0.0     0.4     0.0     0.0     0.0
                                                  43.3%                  968 Florianop-69  1   -30.3    -0.4    31.2                20
 2736  138  0   1.023     0.0     0.0     9.1     0.0     0.0     0.0
 CerPBelo-138   -79.8     0.0     0.0     3.8     0.0     0.0     0.0
                                                  11.9%                 2744 CPBelo-Y-138  1    -9.1    -3.8     9.6
 2737   69  0   1.010     0.0     0.0    61.3     0.0     2.4     0.0
 Criciuma--69   -82.2     0.0     0.0    10.8     0.0     0.0     0.0
                                                  66.9%                 1058 SideropoE-69  1   -48.6     0.5    48.2                20
                                                  58.0%                 1058 SideropoE-69  2   -48.6     0.5    48.2                20
                                                  25.9%                 2747 Forquilhi-69  1    18.0    -4.7    18.4
                                                  25.9%                 2747 Forquilhi-69  2    18.0    -4.7    18.4
 2738   69  0   1.018     0.0     0.0    23.6     0.0     0.0     0.0
 CriciFlor-69   -80.2     0.0     0.0     6.8     0.0     0.0     0.0
                                                  44.7%                 1058 SideropoE-69  1   -23.6    -6.8    24.1                20
 2739  138  0   1.004     0.0     0.0    18.8     0.0     0.0     0.0
 Dohler---138   -78.1     0.0     0.0     5.8     0.0     0.0     0.0
                                                  20.4%                 2746 Dohler-Y-138  1   -18.8    -5.8    19.6
 2740  138  0   1.003     0.0     0.0    41.1     0.0     0.0     0.0
 Comparti-138   -78.2     0.0     0.0    17.5     0.0     0.0     0.0
                                                  26.8%                 2746 Dohler-Y-138  1   -41.1   -17.5    44.5
CEPEL - CENTRO DE PESQUISAS DE ENERGIA ELETRICA - PROGRAMA DE ANALISE DE REDES - V08MAR05A                                PAG. 317

ANUAL 06/07 * SETEMBRO 2006 PESADA S/SE 19H N/NE 19H * ANAT0 - FSE - C13
RELATORIO COMPLETO DO SISTEMA * AREA 25 * *            CELESC              *

X----------------- D A D O S  -  B A R R A -------------------------X------------ F L U X O S  -  C I R C U I T O S -------------X
 DA BARRA      TENSAO GERACAO INJ EQV  CARGA   ELO CC  SHUNT    MOTOR
 NUM. KV TIPO   MOD/    MW/    MW/     MW/     MW/   Mvar/     MW/
     NOME       ANG     Mvar   Mvar    Mvar    Mvar   EQUIV    Mvar  PARA BARRA                    FLUXOS
                                                FLUXO % SHUNT L        NUM.     NOME     NC     MW    Mvar  MVA/V_d   TAP  DEFAS TIE
X------------X-------X-------X-------X-------X-------X-------X-------X----X------------X--X-------X-------X-------X------X-----X---X

 2741    1  0   1.025     0.0     0.0     1.8     0.0     0.0     0.0
 CiaCanoi-138   -75.0     0.0     0.0     0.8     0.0     0.0     0.0
                                                  52.5%                 2725 Canoinha-138  1   -24.2    -9.2    25.2
                                                  21.2%                 2816 Mili-----138  1    22.4     8.4    23.3
 2742   69  0   0.980     0.0     0.0    35.2     0.0     2.3     0.0
 GravatalY-69   -80.9     0.0     0.0     7.6     0.0     0.0     0.0
                                                  45.4%                 1008 JLacerdaA-69  1   -35.2    -5.3    36.3                20
 2744  138  0   1.024     0.0     0.0     0.0     0.0     0.0     0.0
 CPBelo-Y-138   -79.7     0.0     0.0     0.0     0.0     0.0     0.0
                                                  11.8%                 2736 CerPBelo-138  1     9.1     3.6     9.6
                                                  19.9%                 2837 PortBelo-138  1    19.3    -2.7    19.1
                                                  38.6%                 2870 Tijucas--138  1   -28.4    -0.9    27.8
 2746  138  0   1.004     0.0     0.0     0.0     0.0     0.0     0.0
 Dohler-Y-138   -78.1     0.0     0.0     0.0     0.0     0.0     0.0
                                                  20.4%                 2739 Dohler---138  1    18.8     5.8    19.6
                                                  26.8%                 2740 Comparti-138  1    41.1    17.4    44.5
                                                  68.8%                 2789 Joinvil4-138  1   -59.9   -23.2    64.0
 2747   69  0   1.008     0.0     0.0    79.1     0.0    14.6     0.0
 Forquilhi-69   -83.2     0.0     0.0     3.9     0.0     0.0     0.0
                                                  53.8%                 1058 SideropoE-69  1   -43.4     1.1    43.0                20
                                                  25.8%                 2737 Criciuma--69  1   -17.9     4.8    18.4
                                                  25.8%                 2737 Criciuma--69  2   -17.9     4.8    18.4
```

```
 2750  138  0   1.022     0.0     0.0     0.0     0.0     0.0     0.0
 CNovos1Y-138   -58.4     0.0     0.0     0.0     0.0     0.0     0.0
                                              70.6%                 957 CNovos-A-138  1  -143.7    18.8   141.9              20
                                              64.1%                2733 CNovos---138  1    82.5    -9.7    81.4
                                              47.7%                2760 Herval---138  1    61.2    -9.1    60.6
 2751  138  0   1.024     0.0     0.0     0.0     0.0     0.0     0.0
 CNovos2Y-138   -57.1     0.0     0.0     0.0     0.0     0.0     0.0
                                              80.6%                 958 CNovos-B-138  1  -163.4    29.1   162.0              20
                                              69.0%                2760 Herval---138  1    88.5   -14.9    87.6
                                              58.6%                2889 VRamosJr-138  1    74.9   -14.2    74.4
 2752  138  0   1.031     0.0     0.0    20.6     0.0     0.0     0.0
 Gaspar---138   -75.6     0.0     0.0    -2.7     0.0     0.0     0.0
                                              31.9%                 940 Blumenau-138  1   -43.0     5.8    42.1              20
                                              16.6%                 985 Ilhota---138  1    22.4    -3.1    22.0              20
CEPEL - CENTRO DE PESQUISAS DE ENERGIA ELETRICA - PROGRAMA DE ANALISE DE REDES - V08MAR05A                              PAG. 318

ANUAL 06/07 * SETEMBRO 2006 PESADA S/SE 19H N/NE 19H * ANAT0 - FSE - C13
RELATORIO COMPLETO DO SISTEMA * AREA 25 * *             CELESC             *

X----------------- D A D O S  -  B A R R A -------------------------X------------ F L U X O S  -  C I R C U I T O S ------------X
 DA BARRA      TENSAO GERACAO INJ EQV  CARGA   ELO CC  SHUNT    MOTOR
 NUM. KV TIPO   MOD/     MW/     MW/     MW/     MW/   Mvar/     MW/
     NOME       ANG     Mvar    Mvar    Mvar    Mvar   EQUIV    Mvar  PARA BARRA                   FLUXOS
                                              FLUXO % SHUNT L         NUM.     NOME     NC     MW    Mvar  MVA/V_d   TAP  DEFAS TIE
X------------X-------X-------X-------X-------X-------X-------X-------X----X------------X--X-------X-------X-------X------X-----X---X

 2754  138  0   1.023     0.0     0.0    16.5     0.0     2.5     0.0
 Guaramir-138   -76.3     0.0     0.0     1.9     0.0     0.0     0.0
                                              23.2%                2784 JaraRLuz-138  1   -43.6    -7.5    43.2
                                               5.3%                2894 Weg----Y-138  1     1.9     6.6     6.7
                                              19.4%                2898 WegFundi-138  1    25.2     1.5    24.6
 2760  138  0   1.010     0.0     0.0    21.3     0.0     0.0     0.0
 Herval---138   -61.2     0.0     0.0    -1.1     0.0     0.0     0.0
                                               8.8%                2729 Catanduv-138  1     3.2   -10.8    11.1
                                              47.4%                2750 CNovos1Y-138  1   -60.0     9.8    60.2
                                              68.7%                2751 CNovos2Y-138  1   -86.0    18.7    87.2
                                              67.6%                2761 Herval----69  1    22.1     4.4    22.3 0.964*
                                              20.0%                2828 PerdiCap-138  1     7.2     1.0     7.2
                                              38.6%                2892 Videira--138  1    49.2    -6.3    49.1
                                              38.6%                2892 Videira--138  2    49.2    -6.3    49.1
                                               8.7%                2896 Xanxere--138  2    -6.1    -9.4    11.0
 2761   69  0   1.037     2.4     0.0    24.5     0.0     2.6     0.0
 Herval----69   -64.8     0.0     0.0     5.5     0.0     0.0     0.0
                                              65.2%                2760 Herval---138  1   -22.1    -2.9    21.5
 2762    1  0   1.031     0.0     0.0     0.0     0.0     0.0     0.0
 IRMorto-F138   -75.6     0.0     0.0     0.0     0.0     0.0     0.0
                                              20.7%                2763 IbiramaF-138  1    34.1    -0.1    33.1
                                              20.7%                2763 IbiramaF-138  2    34.1    -0.1    33.1
                                              41.3%                2874 Timbo--F-138  1   -68.2     0.2    66.1
 2763  138  0   1.022     0.0     0.0     0.0     0.0     0.0     0.0
 IbiramaF-138   -77.2     0.0     0.0     0.0     0.0     0.0     0.0
                                              20.7%                2762 IRMorto-F138  1   -33.8    -1.4    33.1
                                              20.7%                2762 IRMorto-F138  2   -33.8    -1.4    33.1
                                              45.1%                2841 RioSul2--138  1    67.6     2.9    66.2
 2765   69  0   0.982     0.0     0.0    17.1     0.0     2.3     0.0
 Ibirama---69   -81.5     0.0     0.0     0.5     0.0     0.0     0.0
                                              21.3%                2842 RioSul2---69  1     3.8    -7.7     8.7
                                              24.4%                2869 Teka------69  1    -8.5     4.9    10.0
                                              32.9%                2871 Timbo-----69  1   -12.4     4.5    13.5
 2768  138  0   1.000     0.0     0.0    15.6     0.0     0.0     0.0
```

```
 IlhaSul--138   -79.4     0.0     0.0    -3.6     0.0     0.0     0.0
                                              23.2%                 2706 Desterro-138  1   -31.2    13.8    34.1
                                              43.4%                 2872 Trindade-138  1    15.6   -10.2    18.7
 2769  138  0   1.004     0.0     0.0    34.6     0.0     9.7     0.0
 IlhaCent-138   -79.5     0.0     0.0    12.6     0.0     0.0     0.0
                                              36.3%                 1035 PalhocaE-138  1   -51.0   -10.8    51.9              20
                                              13.6%                 2812 MorrCruz-138  1    16.4     7.9    18.1
CEPEL - CENTRO DE PESQUISAS DE ENERGIA ELETRICA - PROGRAMA DE ANALISE DE REDES - V08MAR05A                              PAG. 319

ANUAL 06/07 * SETEMBRO 2006 PESADA S/SE 19H N/NE 19H * ANAT0 - FSE - C13
RELATORIO COMPLETO DO SISTEMA * AREA 25 * *            CELESC              *

X----------------- D A D O S  -  B A R R A -------------------------X------------ F L U X O S  -  C I R C U I T O S ------------X
 DA BARRA      TENSAO GERACAO INJ EQV  CARGA   ELO CC  SHUNT    MOTOR
 NUM. KV TIPO   MOD/     MW/     MW/     MW/     MW/   Mvar/     MW/
     NOME       ANG     Mvar    Mvar    Mvar    Mvar   EQUIV    Mvar  PARA BARRA                    FLUXOS
                                                FLUXO % SHUNT L         NUM.     NOME     NC     MW    Mvar  MVA/V_d   TAP  DEFAS TIE
X------------X-------X-------X-------X-------X-------X-------X-------X----X------------X--X-------X-------X-------X------X-----X---X

 2770  138  0   0.994     0.0     0.0    30.5     0.0     4.7     0.0
 IlhaNort-138   -80.8     0.0     0.0    -1.0     0.0     0.0     0.0
                                              38.6%                 2872 Trindade-138  1   -30.5     5.7    31.2
 2771  138  0   1.030     0.0     0.0    24.9     0.0     8.9     0.0
 Imbituba-138   -78.1     0.0     0.0     2.1     0.0     0.0     0.0
                                              24.0%                 1007 JLacerdA-138  1   -40.2     8.4    39.9              20
                                               4.7%                 1035 PalhocaE-138  1     4.8     5.1     6.8              20
                                              25.2%                 2804 Laguna---138  1    10.5    -6.7    12.1
 2773  138  0   1.005     0.0     0.0    19.9     0.0     4.8     0.0
 JoIririu-138   -78.2     0.0     0.0     5.0     0.0     0.0     0.0
                                              41.3%                 2789 Joinvil4-138  1   -19.9    -0.2    19.8
 2775  138  0   1.021     0.0     0.0    40.5     0.0     3.8     0.0
 ItajaFaz-138   -76.9     0.0     0.0     9.0     0.0     0.0     0.0
                                              16.9%                  967 Floriano-138  1    19.4    -1.9    19.1              20
                                              52.0%                  992 Itajai---138  1   -59.9    -3.3    58.7              20
 2776   69  0   1.017     0.0     0.0    58.4     0.0     0.0     0.0
 ItajaiSal-69   -80.3     0.0     0.0     3.0     0.0     0.0     0.0
                                              45.6%                  986 Ilhota----69  1   -29.2    -1.5    28.8              20
                                              45.6%                  986 Ilhota----69  2   -29.2    -1.5    28.8              20
 2778  138  0   1.030     0.0     0.0    21.5     0.0    10.2     0.0
 Itaipava-138   -75.8     0.0     0.0     2.7     0.0     0.0     0.0
                                              23.8%                  992 Itajai---138  1   -34.4     6.9    34.1              20
                                               8.8%                 2718 Brusque--138  1    12.9     0.6    12.5
 2780  138  0   1.041     0.0     0.0    14.5     0.0     5.2     0.0
 IndaiaRM-138   -75.0     0.0     0.0     0.6     0.0     0.0     0.0
                                              30.4%                 2866 Timbo----138  1   -14.5     4.6    14.6
 2783  138  0   1.024    15.0     0.0    40.5     0.0     0.0     0.0
 Jaragua--138   -76.3     3.0     0.0     3.6     0.0     0.0     0.0
                                              25.5%                 2811 Malwee2Y-138  1   -50.6    -5.2    49.7
                                              19.6%                 2894 Weg----Y-138  1    25.1     4.6    24.9
 2784  138  0   1.029     0.0     0.0     8.9     0.0     5.1     0.0
 JaraRLuz-138   -75.6     0.0     0.0     1.8     0.0     0.0     0.0
                                              26.4%                 2712 Blumena2-138  1   -52.6    -3.8    51.3
                                              23.1%                 2754 Guaramir-138  1    43.7     7.1    43.1
 2785  138  0   1.013     0.0     0.0    16.3     0.0     0.0     0.0
 Jarivatu-138   -78.0     0.0     0.0     4.2     0.0     0.0     0.0
                                              12.5%                 2799 JoinviSC-138  1   -16.3    -4.2    16.6
CEPEL - CENTRO DE PESQUISAS DE ENERGIA ELETRICA - PROGRAMA DE ANALISE DE REDES - V08MAR05A                              PAG. 320

ANUAL 06/07 * SETEMBRO 2006 PESADA S/SE 19H N/NE 19H * ANAT0 - FSE - C13
RELATORIO COMPLETO DO SISTEMA * AREA 25 * *            CELESC              *
```

```
X----------------- D A D O S  -  B A R R A ------------------------X------------ F L U X O S  -  C I R C U I T O S ------------X
 DA BARRA      TENSAO GERACAO INJ EQV  CARGA   ELO CC  SHUNT    MOTOR
 NUM. KV TIPO   MOD/     MW/     MW/     MW/     MW/   Mvar/     MW/
     NOME       ANG     Mvar    Mvar    Mvar    Mvar   EQUIV    Mvar  PARA BARRA                    FLUXOS
                                                FLUXO % SHUNT L         NUM.     NOME     NC     MW    Mvar  MVA/V_d   TAP  DEFAS TIE
X------------X-------X-------X-------X-------X-------X-------X-------X----X------------X--X-------X-------X-------X------X-----X---X

 2786   69  0   1.029     0.7     0.0    71.2     0.0     7.6     0.0
 Joinvill1-69   -78.5     0.0     0.0    16.3     0.0     0.0     0.0
                                              78.2%                    1017 Joinville-69  1   -50.6    -1.4    49.2              20
                                              78.2%                    1017 Joinville-69  2   -50.6    -1.4    49.2              20
                                              49.1%                    2788 Joinvill3-69  1    30.8    -5.9    30.5
 2788   69  0   1.023     0.0     0.0    25.7     0.0     5.0     0.0
 Joinvill3-69   -80.0     0.0     0.0     3.9     0.0     0.0     0.0
                                              49.1%                    2786 Joinvill1-69  1   -30.5     6.5    30.4
                                              11.3%                    2876 Tupy------69  1     4.8    -5.3     7.0
 2789  138  0   1.006     0.0     0.0     0.0     0.0     0.0     0.0
 Joinvil4-138   -78.0     0.0     0.0     0.0     0.0     0.0     0.0
                                              67.2%                    1016 Joinvill-138  1   -84.9   -31.4    90.0              20
                                              67.2%                    1016 Joinvill-138  2   -84.9   -31.4    90.0              20
                                              68.8%                    2746 Dohler-Y-138  1    60.0    23.2    64.0
                                              41.3%                    2773 JoIririu-138  1    19.9    -0.2    19.8
                                              48.9%                    2791 Joinvil4-FIC  1    89.9    39.7    97.7 0.957F
 2790   69  0   1.039     0.0     0.0     0.0     0.0     0.0     0.0
 Joinvill4-69   -79.5     0.0     0.0     0.0     0.0     0.0     0.0
                                              45.4%                    2791 Joinvil4-FIC  1   -49.4   -27.5    54.4 1.000F
                                              43.2%                    2876 Tupy------69  1    24.7    13.7    27.2
                                              43.2%                    2876 Tupy------69  2    24.7    13.7    27.2
 2791    1  0   1.038     0.0     0.0     0.0     0.0     0.0     0.0
 Joinvil4-FIC   -79.6     0.0     0.0     0.0     0.0     0.0     0.0
                                              46.8%                    2789 Joinvil4-138  1   -89.9   -36.7    93.5
                                              45.4%                    2790 Joinvill4-69  1    49.4    27.4    54.4
                                              50.0%                    2794 Jville4-13.8  1    40.5     9.3    40.0
 2794    1  0   0.985     0.0     0.0    40.5     0.0     0.0     0.0
 Jville4-13.8   -81.9     0.0     0.0     7.6     0.0     0.0     0.0
                                              52.3%                    2791 Joinvil4-FIC  1   -40.5    -7.6    41.8 0.957F
 2799  138  0   1.014     0.0     0.0    18.9     0.0     0.0     0.0
 JoinviSC-138   -77.9     0.0     0.0    -1.3     0.0     0.0     0.0
                                              26.6%                    1016 Joinvill-138  1   -24.7     8.0    25.5              20
                                               8.7%                    2727 Cebrac2Y-138  1    -5.5    -5.2     7.5
                                              12.4%                    2785 Jarivatu-138  1    16.3     3.8    16.5
                                               5.4%                    2830 Picarras-138  1    -5.1    -5.3     7.2
 2800   69  0   0.999     0.0     0.0    10.2     0.0     0.0     0.0
 Karsten---69   -76.5     0.0     0.0     4.1     0.0     0.0     0.0
                                               7.7%                    2851 BlumSalto-69  1    -0.6    -3.1     3.2
                                              40.4%                    2885 UsPalmeir-69  1    -9.6    -1.0     9.7
CEPEL - CENTRO DE PESQUISAS DE ENERGIA ELETRICA - PROGRAMA DE ANALISE DE REDES - V08MAR05A                              PAG. 321

ANUAL 06/07 * SETEMBRO 2006 PESADA S/SE 19H N/NE 19H * ANAT0 - FSE - C13
RELATORIO COMPLETO DO SISTEMA * AREA 25 * *             CELESC              *

X----------------- D A D O S  -  B A R R A ------------------------X------------ F L U X O S  -  C I R C U I T O S ------------X
 DA BARRA      TENSAO GERACAO INJ EQV  CARGA   ELO CC  SHUNT    MOTOR
 NUM. KV TIPO   MOD/     MW/     MW/     MW/     MW/   Mvar/     MW/
     NOME       ANG     Mvar    Mvar    Mvar    Mvar   EQUIV    Mvar  PARA BARRA                    FLUXOS
                                                FLUXO % SHUNT L         NUM.     NOME     NC     MW    Mvar  MVA/V_d   TAP  DEFAS TIE
X------------X-------X-------X-------X-------X-------X-------X-------X----X------------X--X-------X-------X-------X------X-----X---X

 2802  138  0   0.989     0.0     0.0    14.0     0.0     0.0     0.0
```

```
 KlabinKi-138   -69.5     0.0     0.0     4.7     0.0     0.0     0.0
                                                34.7%                 2889 VRamosJr-138  1   -14.0    -4.7    14.9
 2803  138  0   0.996     3.3     0.0    13.2     0.0     0.0     0.0
 LagesAIn-138   -68.9     0.0     0.0    -6.0     0.0     0.0     0.0
                                                58.5%                 2880 CogLages-138  1   -28.0    -0.5    28.1
                                                26.8%                 2889 VRamosJr-138  1    18.1     6.5    19.3
 2804  138  0   1.029     0.0     0.0    10.4     0.0     5.1     0.0
 Laguna---138   -78.8     0.0     0.0     0.3     0.0     0.0     0.0
                                                23.2%                 2771 Imbituba-138  1   -10.4     4.8    11.1
 2808  138  0   1.022     0.5     0.0    35.3     0.0     0.0     0.0
 Mafra----138   -77.8     0.0     0.0     0.3     0.0     0.0     0.0
                                                26.3%                 2725 Canoinha-138  1   -33.2     7.5    33.3
                                                26.3%                 2725 Canoinha-138  2   -33.2     7.5    33.3
                                                16.8%                 2844 RNegrinh-138  1    17.7    -8.8    19.4
                                                13.1%                 2852 SaoBento-138  1    13.9    -6.6    15.1
 2809  138  0   1.028     0.0     0.0     0.0     0.0     0.0     0.0
 Malwee---138   -75.6     0.0     0.0     0.0     0.0     0.0     0.0
                                                 0.0%                 2811 Malwee2Y-138  1     0.0     0.0     0.0
 2811  138  0   1.028     0.0     0.0     0.0     0.0     0.0     0.0
 Malwee2Y-138   -75.6     0.0     0.0     0.0     0.0     0.0     0.0
                                                26.7%                 2712 Blumena2-138  1   -50.7    -5.0    49.6
                                                25.4%                 2783 Jaragua--138  1    50.7     5.0    49.6
                                                 0.0%                 2809 Malwee---138  1     0.0     0.0     0.0
 2812  138  0   1.002     0.0     0.0    19.3     0.0     0.0     0.0
 MorrCruz-138   -79.7     0.0     0.0     7.2     0.0     0.0     0.0
                                                13.8%                 2769 IlhaCent-138  1   -16.4    -8.4    18.4
                                                 2.4%                 2872 Trindade-138  1    -2.9     1.2     3.1
 2816  138  0   1.023     0.0     0.0     3.8     0.0     0.0     0.0
 Mili-----138   -75.1     0.0     0.0     1.8     0.0     0.0     0.0
                                                21.3%                 2741 CiaCanoi-138  1   -22.3    -8.6    23.4
                                                31.1%                 2840 Rigesa---138  1    18.5     6.8    19.3
 2820    1  0   1.025     0.0     0.0     0.0     0.0     0.0     0.0
 OrleansF-138   -74.8     0.0     0.0     0.0     0.0     0.0     0.0
                                                12.5%                 1007 JLacerdA-138  1    10.8   -12.1    15.8               20
                                                20.6%                 2719 Cebrasc--138  1   -22.1    15.3    26.2
                                                23.7%                 2821 Orleans--138  1    11.2    -3.2    11.4
CEPEL - CENTRO DE PESQUISAS DE ENERGIA ELETRICA - PROGRAMA DE ANALISE DE REDES - V08MAR05A                                PAG. 322

ANUAL 06/07 * SETEMBRO 2006 PESADA S/SE 19H N/NE 19H * ANAT0 - FSE - C13
RELATORIO COMPLETO DO SISTEMA * AREA 25 * *             CELESC               *

X------------------ D A D O S  -  B A R R A -------------------------X------------- F L U X O S  -  C I R C U I T O S -------------X
 DA BARRA       TENSAO GERACAO INJ EQV  CARGA   ELO CC  SHUNT    MOTOR
 NUM. KV TIPO    MOD/     MW/     MW/     MW/     MW/   Mvar/     MW/
     NOME        ANG     Mvar    Mvar    Mvar    Mvar   EQUIV    Mvar  PARA BARRA                    FLUXOS
                                                FLUXO % SHUNT L         NUM.     NOME     NC     MW    Mvar  MVA/V_d   TAP  DEFAS TIE
X------------X-------X-------X-------X-------X-------X-------X-------X----X------------X--X-------X-------X-------X------X-----X---X

 2821  138  0   1.025     0.0     0.0    11.2     0.0     5.0     0.0
 Orleans--138   -74.9     0.0     0.0     2.2     0.0     0.0     0.0
                                                23.5%                 2820 OrleansF-138  1   -11.2     2.8    11.3
 2822  138  0   0.959     0.0     0.0     0.0     0.0     0.0     0.0
 Otacilio-138   -71.3     0.0     0.0     0.0     0.0     0.0     0.0
                                                54.4%                 2823 OtaciliT1-69  1    16.4     5.2    17.9 0.947*
                                                59.1%                 2824 OtaciliT4-69  1    18.6     1.8    19.5 0.955*
                                                46.0%                 2889 VRamosJr-138  1   -35.0    -7.0    37.2
 2823   69  0   1.001     0.0     0.0    16.4     0.0     0.0     0.0
 OtaciliT1-69   -73.5     0.0     0.0     4.5     0.0     0.0     0.0
                                                51.5%                 2822 Otacilio-138  1   -16.4    -4.5    17.0
 2824   69  0   1.001     4.2     0.0    22.8     0.0     1.2     0.0
```

```
 OtaciliT4-69   -73.8     0.0     0.0     2.2     0.0     0.0     0.0
                                                56.4%                 2822 Otacilio-138  1   -18.6    -1.0    18.6
 2825  138  0   0.996     0.0     0.0     6.0     0.0     0.0     0.0
 Perdigao-138   -64.2     0.0     0.0     1.9     0.0     0.0     0.0
                                                14.7%                 2892 Videira--138  1    -6.0    -1.9     6.3
 2826  138  0   1.011     0.0     0.0    40.1     0.0     4.9     0.0
 Palhoca--138   -78.6     0.0     0.0    11.6     0.0     0.0     0.0
                                                55.8%                 1035 PalhocaE-138  1   -40.1    -6.7    40.2               20
 2827  138  0   1.006     0.0     0.0    15.6     0.0     0.0     0.0
 Palmitos-138   -61.8     0.0     0.0     2.5     0.0     0.0     0.0
                                                54.2%                 2832 Pinhalzi-138  1   -15.6    -2.5    15.7
 2828    1  0   1.007     0.0     0.0     7.2     0.0     0.0     0.0
 PerdiCap-138   -61.4     0.0     0.0     2.7     0.0     0.0     0.0
                                                21.2%                 2760 Herval---138  1    -7.2    -2.7     7.6
 2830  138  0   1.024     0.0     0.0    21.8     0.0     5.0     0.0
 Picarras-138   -77.2     0.0     0.0    -1.0     0.0     0.0     0.0
                                                44.8%                  985 Ilhota---138  1   -39.4     1.4    38.5               20
                                                14.8%                 2727 Cebrac2Y-138  1    12.5     3.7    12.7
                                                 3.8%                 2799 JoinviSC-138  1     5.1     1.0     5.1
CEPEL - CENTRO DE PESQUISAS DE ENERGIA ELETRICA - PROGRAMA DE ANALISE DE REDES - V08MAR05A                                PAG. 323

ANUAL 06/07 * SETEMBRO 2006 PESADA S/SE 19H N/NE 19H * ANAT0 - FSE - C13
RELATORIO COMPLETO DO SISTEMA * AREA 25 * *             CELESC               *

X----------------- D A D O S  -  B A R R A ------------------------X------------ F L U X O S  -  C I R C U I T O S ------------X
 DA BARRA      TENSAO GERACAO INJ EQV  CARGA   ELO CC  SHUNT    MOTOR
 NUM. KV TIPO   MOD/     MW/     MW/     MW/     MW/   Mvar/     MW/
     NOME       ANG     Mvar    Mvar    Mvar    Mvar   EQUIV    Mvar  PARA BARRA                    FLUXOS
                                                FLUXO % SHUNT L         NUM.     NOME     NC     MW    Mvar  MVA/V_d   TAP  DEFAS TIE
X------------X-------X-------X-------X-------X-------X-------X-------X----X------------X--X-------X-------X-------X------X-----X---X

 2832  138  0   1.012     0.0     0.0    25.6     0.0     3.7     0.0
 Pinhalzi-138   -61.1     0.0     0.0     3.2     0.0     0.0     0.0
                                                53.5%                 2827 Palmitos-138  1    15.7     0.6    15.5
                                                35.8%                 2838 QQueixo--138  1   -53.3    12.7    54.1               39
                                                35.8%                 2838 QQueixo--138  2   -53.3    12.7    54.1               39
                                                 7.6%                 2839 Quilombo-138  1    -1.9   -12.1    12.1
                                                55.9%                 2860 SLourenc-138  1    15.9    -3.9    16.2
                                                62.5%                 2861 SMiguel2-138  1    58.7     2.6    58.1
                                                 8.8%                 2896 Xanxere--138  1    -7.5   -12.1    14.1
 2834  138  0   1.013     0.0     0.0    19.9     0.0     0.0     0.0
 Pirabeir-138   -77.9     0.0     0.0     3.2     0.0     0.0     0.0
                                                11.8%                 2852 SaoBento-138  1     7.5   -11.5    13.5
                                                22.2%                 2867 Tigre----138  1   -27.4     8.3    28.2
 2837  138  0   1.023     0.0     0.0    19.3     0.0     2.5     0.0
 PortBelo-138   -79.9     0.0     0.0     0.2     0.0     0.0     0.0
                                                19.8%                 2744 CPBelo-Y-138  1   -19.3     2.3    19.0
 2839  138  0   1.022     0.0     0.0     8.5     0.0     0.0     0.0
 Quilombo-138   -61.1     0.0     0.0    -2.2     0.0     0.0     0.0
                                                 6.0%                 2832 Pinhalzi-138  1     1.9     9.7     9.7
                                                 7.9%                 2896 Xanxere--138  1   -10.4    -7.5    12.6
 2840  138  0   1.021     0.0     0.0    18.5     0.0     0.0     0.0
 Rigesa---138   -75.2     0.0     0.0     7.1     0.0     0.0     0.0
                                                31.3%                 2816 Mili-----138  1   -18.5    -7.1    19.4
 2841  138  0   1.012     0.0     0.0    16.9     0.0     0.0     0.0
 RioSul2--138   -79.1     0.0     0.0     1.0     0.0     0.0     0.0
                                                45.1%                 2763 IbiramaF-138  1   -67.0    -2.0    66.3
                                                59.7%                 2842 RioSul2---69  1    39.1     7.9    39.4 1.008*
                                                41.4%                 2873 Trombudo-138  1    11.0    -6.9    12.8
 2842   69  0   0.993     0.0     0.0    42.8     0.0     2.4     0.0
```

```
 RioSul2---69   -82.7     0.0     0.0     0.2     0.0     0.0     0.0
                                               20.5%                 2765 Ibirama---69  1    -3.7     7.5     8.4
                                               60.2%                 2841 RioSul2--138  1   -39.1    -5.3    39.8
 2844  138  0   1.022     0.0     0.0    17.5     0.0     2.5     0.0
 RNegrinh-138   -78.8     0.0     0.0    -7.9     0.0     0.0     0.0
                                               16.0%                 2808 Mafra----138  1   -17.6     6.7    18.4
                                                3.2%                 2852 SaoBento-138  1     0.1     3.7     3.7
 2845    1  0   1.000     0.0     0.0    56.0     0.0     0.0     0.0
 Rocado----13   -83.9     0.0     0.0    17.7     0.0     0.0     0.0
                                               70.8%                  967 Floriano-138  1   -56.0   -17.7    58.7                20
CEPEL - CENTRO DE PESQUISAS DE ENERGIA ELETRICA - PROGRAMA DE ANALISE DE REDES - V08MAR05A                                PAG. 324

ANUAL 06/07 * SETEMBRO 2006 PESADA S/SE 19H N/NE 19H * ANAT0 - FSE - C13
RELATORIO COMPLETO DO SISTEMA * AREA 25 * *             CELESC              *

X----------------- D A D O S  -  B A R R A ------------------------X------------ F L U X O S  -  C I R C U I T O S ------------X
 DA BARRA      TENSAO GERACAO INJ EQV  CARGA   ELO CC  SHUNT    MOTOR
 NUM. KV TIPO   MOD/     MW/     MW/     MW/     MW/   Mvar/     MW/
     NOME       ANG     Mvar    Mvar    Mvar    Mvar   EQUIV    Mvar  PARA BARRA                    FLUXOS
                                                FLUXO % SHUNT L         NUM.     NOME     NC     MW    Mvar  MVA/V_d   TAP  DEFAS TIE
X------------X-------X-------X-------X-------X-------X-------X-------X----X------------X--X-------X-------X-------X------X-----X---X

 2848  138  0   1.003     0.0     0.0    13.2     0.0     0.0     0.0
 SadiaCha-138   -63.2     0.0     0.0     5.8     0.0     0.0     0.0
                                               30.0%                 2731 Chapeco2-138  1   -13.2    -5.8    14.4
 2851   69  0   1.001     3.5     0.0    35.7     0.0     7.2     0.0
 BlumSalto-69   -76.5     1.0     0.0    10.1     0.0     0.0     0.0
                                               38.3%                 2713 Blumenau2-69  1   -23.8    -0.9    23.8
                                               38.3%                 2713 Blumenau2-69  2   -23.8    -0.9    23.8
                                                7.5%                 2800 Karsten---69  1     0.6     3.0     3.1
                                               36.8%                 2869 Teka------69  1    14.8    -3.1    15.1
 2852  138  0   1.021     0.0     0.0    19.8     0.0    10.0     0.0
 SaoBento-138   -78.8     0.0     0.0    -2.0     0.0     0.0     0.0
                                               12.2%                 2808 Mafra----138  1   -13.8     3.7    14.0
                                                9.2%                 2834 Pirabeir-138  1    -7.4     8.0    10.6
                                                3.8%                 2844 RNegrinh-138  1    -0.1    -4.4     4.3
                                                4.2%                 2853 SBenNBra-138  1     1.5     4.7     4.9
 2853  138  0   1.021     0.0     0.0    14.7     0.0     5.0     0.0
 SBenNBra-138   -78.8     0.0     0.0     1.4     0.0     0.0     0.0
                                               13.5%                 1016 Joinvill-138  1   -13.2     8.7    15.5                20
                                                4.6%                 2852 SaoBento-138  1    -1.5    -5.1     5.3
 2857   69  0   1.028     0.0     0.0    35.5     0.0     0.0     0.0
 Sideropol-69   -79.4     0.0     0.0     2.2     0.0     0.0     0.0
                                               43.3%                 1058 SideropoE-69  1   -35.5    -2.2    34.6                20
 2859  138  0   1.012     0.0     0.0     5.9     0.0     2.5     0.0
 SJoaquim-138   -72.3     0.0     0.0     1.4     0.0     0.0     0.0
                                               20.6%                 1007 JLacerdA-138  1    16.8   -17.7    24.1                20
                                               31.3%                 2889 VRamosJr-138  1   -22.7    18.8    29.1
 2860  138  0   1.006     0.0     0.0    15.8     0.0     0.0     0.0
 SLourenc-138   -62.4     0.0     0.0    -0.7     0.0     0.0     0.0
                                               54.2%                 2832 Pinhalzi-138  1   -15.8     0.7    15.7
 2861  138  0   0.989     0.0     0.0    27.5     0.0     2.9     0.0
 SMiguel2-138   -64.9     0.0     0.0     1.5     0.0     0.0     0.0
                                               62.6%                 2832 Pinhalzi-138  1   -57.6    -1.9    58.2
                                               92.8%                 2862 SMiguel2--69  1    30.1     3.4    30.6 0.976*
 2862   69  0   1.007     0.0     0.0    30.1     0.0     5.5     0.0
 SMiguel2--69   -70.1     0.0     0.0     6.1     0.0     0.0     0.0
                                               90.6%                 2861 SMiguel2-138  1   -30.1    -0.6    29.9
CEPEL - CENTRO DE PESQUISAS DE ENERGIA ELETRICA - PROGRAMA DE ANALISE DE REDES - V08MAR05A                                PAG. 325
```

ANUAL 06/07 * SETEMBRO 2006 PESADA S/SE 19H N/NE 19H * ANAT0 - FSE - C13
RELATORIO COMPLETO DO SISTEMA * AREA 25 * * CELESC *

| DADOS - BARRA | | | | | | | | FLUXOS - CIRCUITOS | | | | | | | |
|---|---|---|---|---|---|---|---|---|---|---|---|---|---|---|---|
| DA BARRA NUM. KV TIPO NOME | TENSAO MOD/ ANG | GERACAO MW/ Mvar | INJ EQV MW/ Mvar | CARGA MW/ Mvar | ELO CC MW/ Mvar FLUXO % | SHUNT Mvar/ EQUIV SHUNT L | MOTOR MW/ Mvar | PARA BARRA NUM. | NOME | NC | MW | FLUXOS Mvar | MVA/V_d | TAP | DEFAS | TIE |
| 2865 138 0 | 1.028 | 0.0 | 0.0 | 0.0 | 0.0 | 0.0 | 0.0 | | | | | | | | | |
| TijucasY-138 | -79.2 | 0.0 | 0.0 | 0.0 | 0.0 | 0.0 | 0.0 | | | | | | | | | |
| | | | | | 19.5% | | | 948 | Biguacu--138 | 1 | -22.6 | 1.2 | 22.0 | | | |
| | | | | | 27.8% | | | 2723 | CambMBoi-138 | 1 | -32.2 | 1.0 | 31.4 | | | |
| | | | | | 86.1% | | | 2870 | Tijucas--138 | 1 | 54.8 | -2.2 | 53.4 | | | |
| 2866 138 0 | 1.041 | 0.0 | 0.0 | 13.8 | 0.0 | 5.2 | 0.0 | | | | | | | | | |
| Timbo----138 | -74.8 | 0.0 | 0.0 | -3.3 | 0.0 | 0.0 | 0.0 | | | | | | | | | |
| | | | | | 34.2% | | | 940 | Blumenau-138 | 1 | -48.2 | 16.2 | 48.9 | | | 20 |
| | | | | | 30.9% | | | 2780 | IndaiaRM-138 | 1 | 14.5 | -5.3 | 14.8 | | | |
| | | | | | 29.2% | | | 2871 | Timbo-----69 | 1 | 19.9 | -2.4 | 19.3 | 1.042* | | |
| 2867 138 0 | 1.013 | 0.0 | 0.0 | 7.0 | 0.0 | 0.0 | 0.0 | | | | | | | | | |
| Tigre----138 | -77.7 | 0.0 | 0.0 | 2.6 | 0.0 | 0.0 | 0.0 | | | | | | | | | |
| | | | | | 27.1% | | | 1016 | Joinvill-138 | 1 | -34.4 | 5.9 | 34.5 | | | 20 |
| | | | | | 22.3% | | | 2834 | Pirabeir-138 | 1 | 27.4 | -8.5 | 28.3 | | | |
| 2869 69 0 | 0.986 | 0.0 | 0.0 | 5.7 | 0.0 | 0.0 | 0.0 | | | | | | | | | |
| Teka------69 | -78.6 | 0.0 | 0.0 | 1.9 | 0.0 | 0.0 | 0.0 | | | | | | | | | |
| | | | | | 25.1% | | | 2765 | Ibirama---69 | 1 | 8.8 | -5.1 | 10.3 | | | |
| | | | | | 36.6% | | | 2851 | BlumSalto-69 | 1 | -14.5 | 3.2 | 15.0 | | | |
| 2870 138 0 | 1.027 | 0.0 | 0.0 | 26.3 | 0.0 | 0.0 | 0.0 | | | | | | | | | |
| Tijucas--138 | -79.2 | 0.0 | 0.0 | -2.5 | 0.0 | 0.0 | 0.0 | | | | | | | | | |
| | | | | | 38.6% | | | 2744 | CPBelo-Y-138 | 1 | 28.5 | 0.3 | 27.8 | | | |
| | | | | | 86.1% | | | 2865 | TijucasY-138 | 1 | -54.8 | 2.2 | 53.4 | | | |
| 2871 69 0 | 1.003 | 0.0 | 0.0 | 20.0 | 0.0 | 0.0 | 0.0 | | | | | | | | | |
| Timbo-----69 | -76.6 | 0.0 | 0.0 | 3.7 | 0.0 | 0.0 | 0.0 | | | | | | | | | |
| | | | | | 33.6% | | | 2765 | Ibirama---69 | 1 | 13.1 | -4.4 | 13.8 | | | |
| | | | | | 30.4% | | | 2866 | Timbo----138 | 1 | -19.9 | 3.0 | 20.1 | | | |
| | | | | | 34.2% | | | 2885 | UsPalmeir-69 | 1 | -13.2 | -2.3 | 13.3 | | | |
| 2872 138 0 | 1.002 | 0.0 | 0.0 | 41.4 | 0.0 | 3.0 | 0.0 | | | | | | | | | |
| Trindade-138 | -79.6 | 0.0 | 0.0 | 5.6 | 0.0 | 0.0 | 0.0 | | | | | | | | | |
| | | | | | 31.2% | | | 1035 | PalhocaE-138 | 1 | -42.3 | -14.4 | 44.6 | | | 20 |
| | | | | | 13.6% | | | 2706 | Desterro-138 | 1 | -17.3 | 10.1 | 20.1 | | | |
| | | | | | 42.7% | | | 2768 | IlhaSul--138 | 1 | -15.6 | 9.7 | 18.3 | | | |
| | | | | | 38.8% | | | 2770 | IlhaNort-138 | 1 | 30.9 | -6.4 | 31.5 | | | |
| | | | | | 2.5% | | | 2812 | MorrCruz-138 | 1 | 2.9 | -1.7 | 3.4 | | | |
| 2873 138 0 | 1.014 | 0.0 | 0.0 | 11.0 | 0.0 | 0.0 | 0.0 | | | | | | | | | |
| Trombudo-138 | -79.5 | 0.0 | 0.0 | -5.4 | 0.0 | 0.0 | 0.0 | | | | | | | | | |
| | | | | | 39.0% | | | 2841 | RioSul2--138 | 1 | -11.0 | 5.4 | 12.1 | | | |



ANUAL 06/07 * SETEMBRO 2006 PESADA S/SE 19H N/NE 19H * ANAT0 - FSE - C13
RELATORIO COMPLETO DO SISTEMA * AREA 25 * * CELESC *

| DADOS - BARRA | | | | | | | | FLUXOS - CIRCUITOS | | | | | | | |
|---|---|---|---|---|---|---|---|---|---|---|---|---|---|---|---|
| DA BARRA NUM. KV TIPO NOME | TENSAO MOD/ ANG | GERACAO MW/ Mvar | INJ EQV MW/ Mvar | CARGA MW/ Mvar | ELO CC MW/ Mvar FLUXO % | SHUNT Mvar/ EQUIV SHUNT L | MOTOR MW/ Mvar | PARA BARRA NUM. | NOME | NC | MW | FLUXOS Mvar | MVA/V_d | TAP | DEFAS | TIE |
| 2874 138 0 | 1.033 | 0.0 | 0.0 | 0.0 | 0.0 | 5.1 | 0.0 | | | | | | | | | |

```
 Timbo--F-138   -75.2     0.0     0.0     0.0     0.0     0.0     0.0
                                                41.5%                 940 Blumenau-138  1   -68.3     5.2    66.3                20
                                                41.3%                2762 IRMorto-F138  1    68.3     0.0    66.1
 2875   69  0   1.021     0.0     0.0    58.4     0.0     8.8     0.0
 Tubarao---69   -78.3     0.0     0.0    16.6     0.0     0.0     0.0
                                                52.4%                1008 JLacerdaA-69  1   -32.9    -7.4    33.0                20
                                                61.0%                1008 JLacerdaA-69  2   -25.5    -0.5    25.0                20
 2876   69  0   1.025     0.0     0.0    53.8     0.0     0.0     0.0
 Tupy------69   -80.2     0.0     0.0    21.5     0.0     0.0     0.0
                                                11.2%                2788 Joinvill3-69  1    -4.8     5.3     6.9
                                                43.3%                2790 Joinvill4-69  1   -24.5   -13.4    27.3
                                                43.3%                2790 Joinvill4-69  2   -24.5   -13.4    27.3
 2880  138  0   0.997     0.0     0.0     0.0     0.0     0.0     0.0
 CogLages-138   -68.8     0.0     0.0     0.0     0.0     0.0     0.0
                                                80.3%                 902 CogLages-1GR  1   -28.0    -0.4    28.1 1.000F         19
                                                58.5%                2803 LagesAIn-138  1    28.0     0.4    28.1
 2884   69  0   1.008     9.0     0.0     1.7     0.0     0.0     0.0
 UsGarcia--69   -78.7     4.0     0.0     0.8     0.0     0.0     0.0
                                                65.9%                 968 Florianop-69  1     7.3     3.2     7.9                20
 2885   69  0   1.023    25.4     0.0     2.2     0.0     0.0     0.0
 UsPalmeir-69   -74.7     4.0     0.0     0.8     0.0     0.0     0.0
                                                40.2%                2800 Karsten---69  1     9.8     0.9     9.7
                                                34.0%                2871 Timbo-----69  1    13.4     2.3    13.3
 2886  230  0   1.009     0.0     0.0    23.5     0.0     0.0     0.0
 VegaSul--230   -74.6     0.0     0.0     9.4     0.0     0.0     0.0
                                                 6.1%                1015 Joinvill-230  1   -11.7    -4.7    12.5                20
                                                 6.1%                1015 Joinvill-230  2   -11.7    -4.7    12.5                20
 2889  138  0   0.994     3.3     0.0    38.8     0.0     9.5     0.0
 VRamosJr-138   -69.0     0.0     0.0     6.4     0.0     0.0     0.0
                                                36.5%                2719 Cebrasc--138  1    26.3   -21.1    33.9
                                                49.8%                2733 CNovos---138  1   -60.3    17.8    63.2
                                                57.2%                2751 CNovos2Y-138  1   -69.0    21.4    72.7
                                                33.6%                2802 KlabinKi-138  1    14.0     2.9    14.4
                                                27.0%                2803 LagesAIn-138  1   -18.1    -6.9    19.5
                                                45.5%                2822 Otacilio-138  1    36.0     6.5    36.8
                                                34.7%                2859 SJoaquim-138  1    23.5   -21.9    32.3
                                                38.9%                2890 VRamosJr--69  1    12.0     4.4    12.8 0.941*
CEPEL - CENTRO DE PESQUISAS DE ENERGIA ELETRICA - PROGRAMA DE ANALISE DE REDES - V08MAR05A                                PAG. 327

ANUAL 06/07 * SETEMBRO 2006 PESADA S/SE 19H N/NE 19H * ANAT0 - FSE - C13
RELATORIO COMPLETO DO SISTEMA * AREA 25 * *            CELESC              *

X----------------- D A D O S  -  B A R R A -------------------------X------------ F L U X O S  -  C I R C U I T O S ------------X
 DA BARRA      TENSAO GERACAO INJ EQV  CARGA   ELO CC  SHUNT    MOTOR
 NUM. KV TIPO   MOD/     MW/     MW/     MW/     MW/   Mvar/     MW/
     NOME       ANG     Mvar    Mvar    Mvar    Mvar   EQUIV    Mvar  PARA BARRA                    FLUXOS
                                                FLUXO % SHUNT L        NUM.     NOME     NC     MW    Mvar  MVA/V_d   TAP  DEFAS TIE
X------------X-------X-------X-------X-------X-------X-------X-------X----X------------X--X-------X-------X-------X------X-----X---X

 2890   69  0   1.045     0.0     0.0    12.0     0.0     0.0     0.0
 VRamosJr--69   -71.0     0.0     0.0     3.9     0.0     0.0     0.0
                                                36.6%                2889 VRamosJr-138  1   -12.0    -3.9    12.1
 2892  138  0   0.996     0.5     0.0    31.8     0.0     4.8     0.0
 Videira--138   -64.2     0.0     0.0     1.3     0.0     0.0     0.0
                                                33.0%                2722 Cacador--138  1    17.2    -7.4    18.8
                                                33.0%                2722 Cacador--138  2    17.2    -7.4    18.8
                                                38.4%                2760 Herval---138  1   -48.2     6.0    48.7
                                                38.4%                2760 Herval---138  2   -48.2     6.0    48.7
                                                14.6%                2825 Perdigao-138  1     6.0     1.8     6.3
                                                76.1%                2893 Videira---69  1    24.6     4.5    25.1 0.985*
```

```
 2893   69  0   1.001     0.0     0.0    24.6     0.0     2.4     0.0
 Videira---69   -68.5     0.0     0.0     5.0     0.0     0.0     0.0
                                                74.9%                 2892 Videira--138  1   -24.6    -2.6    24.7
 2894  138  0   1.023     0.0     0.0     0.0     0.0     0.0     0.0
 Weg----Y-138   -76.3     0.0     0.0     0.0     0.0     0.0     0.0
                                                 5.4%                 2754 Guaramir-138  1    -1.9    -6.8     6.9
                                                19.7%                 2783 Jaragua--138  1   -25.1    -4.7    25.0
                                                39.8%                 2895 Weg------138  1    27.0    11.5    28.7
 2895  138  0   1.022     0.0     0.0    27.0     0.0     0.0     0.0
 Weg------138   -76.4     0.0     0.0    11.5     0.0     0.0     0.0
                                                39.9%                 2894 Weg----Y-138  1   -27.0   -11.5    28.7
 2896  138  0   1.030     0.0     0.0    19.5     0.0     0.0     0.0
 Xanxere--138   -60.7     0.0     0.0    -2.3     0.0     0.0     0.0
                                                53.9%                 1069 Xanxere--230  1   -45.8    -9.0    45.3 1.029*        20
                                                54.2%                 1069 Xanxere--230  2   -46.0    -9.0    45.5 1.029*        20
                                                53.0%                 1069 Xanxere--230  3   -45.0    -8.9    44.5 1.029*        20
                                                58.5%                 1069 Xanxere--230  4   -44.6    -7.7    43.9 1.029*        20
                                                 7.2%                 2729 Catanduv-138  1     9.2     1.9     9.1
                                                52.6%                 2731 Chapeco2-138  1    49.5     9.2    48.9
                                                 5.1%                 2760 Herval---138  2     6.1     2.6     6.5
                                                 6.6%                 2832 Pinhalzi-138  1     7.6     7.7    10.5
                                                 7.0%                 2839 Quilombo-138  1    10.5     4.7    11.1
                                                58.1%                 2897 Xanxere---69  1    78.9    10.8    77.3 1.014*
 2897   69  0   1.009     5.4     0.0   107.2     0.0     3.7     0.0
 Xanxere---69   -64.6     0.0     0.0    10.2     0.0     0.0     0.0
                                                68.8%                 1069 Xanxere--230  1   -22.9    -1.2    22.7               20
                                                58.9%                 2896 Xanxere--138  1   -78.9    -5.4    78.3
```





```
X----------------- D A D O S  -  B A R R A -------------------------X------------ F L U X O S  -  C I R C U I T O S ------------X
 DA BARRA      TENSAO GERACAO INJ EQV  CARGA   ELO CC  SHUNT    MOTOR
 NUM. KV TIPO   MOD/     MW/     MW/     MW/     MW/   Mvar/     MW/
     NOME       ANG     Mvar    Mvar    Mvar    Mvar   EQUIV    Mvar  PARA BARRA                    FLUXOS
                                                FLUXO % SHUNT L         NUM.     NOME     NC     MW    Mvar  MVA/V_d   TAP  DEFAS TIE
X------------X-------X-------X-------X-------X-------X-------X-------X----X------------X--X-------X-------X-------X------X-----X---X

 2898  138  0   1.019     0.0     0.0     3.5     0.0     0.0     0.0
 WegFundi-138   -76.8     0.0     0.0     1.7     0.0     0.0     0.0
                                                16.7%                 1016 Joinvill-138  1    21.6     0.4    21.2               20
                                                19.5%                 2754 Guaramir-138  1   -25.1    -2.1    24.7
```

TOTAIS DA AREA 25

```
X--------X--------X--------X--------X--------X--------X--------X--------X
  GERACAO  INJ EQV   CARGA   ELO CC    SHUNT   EXPORT   IMPORT   PERDAS
    MW/      MW/      MW/      MW/     Mvar/     MW/      MW/      MW/
   Mvar     Mvar     Mvar     Mvar     EQUIV    Mvar     Mvar     Mvar
X--------X--------X--------X--------X--------X--------X--------X--------X

     75.7      0.0   2439.1      0.0    243.6    139.5   2551.2     48.3
     12.0      0.0    334.7      0.0      0.0    225.1    283.0    -21.3
```

```
RELATORIO COMPLETO DO SISTEMA * AREA 26 * *             ENERSUL              *

X----------------- D A D O S  -  B A R R A -------------------------X------------ F L U X O S  -  C I R C U I T O S ------------X
 DA BARRA      TENSAO GERACAO INJ EQV  CARGA   ELO CC  SHUNT    MOTOR
 NUM. KV TIPO   MOD/     MW/     MW/     MW/     MW/   Mvar/     MW/
     NOME       ANG     Mvar    Mvar    Mvar    Mvar   EQUIV    Mvar  PARA BARRA                    FLUXOS
                                                FLUXO % SHUNT L         NUM.     NOME     NC     MW    Mvar  MVA/V_d   TAP  DEFAS TIE
X------------X-------X-------X-------X-------X-------X-------X-------X----X------------X--X-------X-------X-------X------X-----X---X

 1093  138  0   0.998     0.0     0.0     0.0     0.0     0.0     0.0
 IvinhemF-138   -74.2     0.0     0.0     0.0     0.0     0.0     0.0
                                              48.0%                    1096 NAndradF-138  1   -66.2    17.5    68.6
                                              46.9%                    1140 DouNacoe-138  1    53.7   -22.1    58.2
                                              44.4%                    1836 Ivinhema-FIC  1    12.5     4.6    13.3 0.960*
 1096  138  0   1.012     0.0     0.0     0.0     0.0     0.0     0.0
 NAndradF-138   -68.4     0.0     0.0     0.0     0.0     0.0     0.0
                                              48.5%                    1093 IvinhemF-138  1    68.7   -14.5    69.4
                                              59.3%                    1098 TravesRP-138  1   -85.1    11.3    84.8
                                              18.3%                    1147 NAndradi-138  1    16.3     3.1    16.4
 1098  138  0   1.034     0.0     0.0     0.0     0.0     0.0     0.0
 TravesRP-138   -63.8     0.0     0.0     0.0     0.0     0.0     0.0
                                              59.5%                     657 PPRIMA-A-138  1   -87.7     7.1    85.1               06
                                              59.5%                    1096 NAndradF-138  1    87.7    -7.1    85.1
 1125    1  0   1.019     9.5     0.0     3.7     0.0     0.0     0.0
 Mimoso-1---6   -74.1     0.0     0.0    -0.2     0.0     0.0     0.0
                                              56.9%                    1144 Mimoso---138  1     5.8     0.2     5.7
 1126    1  0   0.998    20.0     0.0     0.0     0.0     0.0     0.0
 Mimoso-2---6   -70.0     6.0     0.0     0.0     0.0     0.0     0.0
                                              83.7%                    1144 Mimoso---138  1    20.0     6.0    20.9
 1127  138  0   1.032     0.0     0.0     0.0     0.0     0.0     0.0
 Jardim---138   -91.1     0.0     0.0     0.0     0.0     0.0     0.0
                                              22.1%                    1145 Maracaju-138  1   -17.9    10.1    19.9
                                              60.8%                    1828 Jardim----13  1    15.4    -2.9    15.2
                                               7.6%                    1895 PMurtinh-138  1     2.5    -7.1     7.3
 1128  138  0   1.008     0.0     0.0     0.0     0.0     0.0     0.0
 DouAlvor-138   -82.1     0.0     0.0     0.0     0.0     0.0     0.0
                                              24.7%                    1140 DouNacoe-138  1    23.9     1.2    23.7
                                              38.8%                    1142 DouSCruz-138  1   -36.6    -8.5    37.3
                                              58.2%                    1826 DouAlvora-13  1    12.7     7.3    14.6
 1129  138  0   0.994     0.0     0.0     0.0     0.0     0.0     0.0
 CGLagead-138   -85.5     0.0     0.0     0.0     0.0     0.0     0.0
                                              11.5%                    1134 CGMCouto-138  1    -7.5     8.0    11.0
                                          SUP 103.8%                   1802 CGLageado-13  1    22.4    12.8    26.0
                                              26.8%                    1890 CGImbiru-138  1   -14.9   -20.8    25.7
CEPEL - CENTRO DE PESQUISAS DE ENERGIA ELETRICA - PROGRAMA DE ANALISE DE REDES - V08MAR05A                                PAG. 330

ANUAL 06/07 * SETEMBRO 2006 PESADA S/SE 19H N/NE 19H * ANAT0 - FSE - C13
RELATORIO COMPLETO DO SISTEMA * AREA 26 * *             ENERSUL              *

X----------------- D A D O S  -  B A R R A -------------------------X------------ F L U X O S  -  C I R C U I T O S ------------X
 DA BARRA      TENSAO GERACAO INJ EQV  CARGA   ELO CC  SHUNT    MOTOR
 NUM. KV TIPO   MOD/     MW/     MW/     MW/     MW/   Mvar/     MW/
     NOME       ANG     Mvar    Mvar    Mvar    Mvar   EQUIV    Mvar  PARA BARRA                    FLUXOS
                                                FLUXO % SHUNT L         NUM.     NOME     NC     MW    Mvar  MVA/V_d   TAP  DEFAS TIE
X------------X-------X-------X-------X-------X-------X-------X-------X----X------------X--X-------X-------X-------X------X-----X---X

 1130  138  0   0.999     0.0     0.0     0.0     0.0     0.0     0.0
 CGAlmoxi-138   -86.1     0.0     0.0     0.0     0.0     0.0     0.0
                                               9.7%                    1132 CGAScaff-138  1    -5.5     9.4    10.8
                                              40.7%                    1800 CGAlmoxar-13  1    14.7    -7.9    16.7
```

```
                                                 41.0%                 1800 CGAlmoxar-13  2    14.8    -7.9    16.8
                                                 26.0%                 1890 CGImbiru-138  1   -24.1     6.4    24.9
 1131  138  0   1.025     0.0     0.0     0.0     0.0     0.0     0.0
 Aquidaua-138   -88.1     0.0     0.0     0.0     0.0     0.0     0.0
                                                 46.3%                 1079 Anastaci-138  1   -54.6    -0.4    53.3                20
                                                 20.8%                 1137 Corumba--138  1    20.3   -12.4    23.3
                                                 35.7%                 1146 Miranda--138  1    32.9   -12.3    34.2
                                                 56.4%                 1806 Aquidauan-13  1    22.4     7.8    23.1 0.967*
                                                 13.8%                 1890 CGImbiru-138  1   -10.5     8.7    13.3
                                                 13.8%                 1890 CGImbiru-138  2   -10.5     8.7    13.3
 1132  138  0   0.995     0.0     0.0     0.0     0.0    14.8     0.0
 CGAScaff-138   -85.8     0.0     0.0     0.0     0.0     0.0     0.0
                                                 10.6%                 1130 CGAlmoxi-138  1     5.5   -10.5    11.9
                                                 37.7%                 1134 CGMCouto-138  1   -32.8    26.2    42.2
                                                 47.8%                 1804 CGAScaffa-13  1    11.4    -0.4    11.5
                                                 64.1%                 1804 CGAScaffa-13  2    15.9    -0.5    16.0
 1133  138  0   0.986     0.0     0.0     0.0     0.0     0.0     0.0
 CGCentro-138   -85.8     0.0     0.0     0.0     0.0     0.0     0.0
                                                 13.9%                 1136 CGCuiaba-138  1   -13.1     0.7    13.3
                                                 71.2%                 1814 CGCentro--13  1    23.9    16.0    29.2
                                                 13.7%                 1892 CGJAbrao-138  1   -10.8   -16.7    20.2
 1134  138  0   0.991     0.0     0.0     0.0     0.0     0.0     0.0
 CGMCouto-138   -85.2     0.0     0.0     0.0     0.0     0.0     0.0
                                                 35.8%                 1082 CGrande--138  1   -42.6     5.4    43.3                20
                                                 35.8%                 1082 CGrande--138  2   -42.6     5.4    43.3                20
                                                 12.3%                 1129 CGLagead-138  1     7.5    -9.0    11.8
                                                 38.0%                 1132 CGAScaff-138  1    33.0   -26.4    42.6
                                                 84.7%                 1815 CGMCouto--13  1    14.7     8.1    16.9
                                                 87.5%                 1815 CGMCouto--13  2    15.2     8.4    17.5
                                                 84.7%                 1815 CGMCouto--13  3    14.7     8.1    16.9
 1135  138  0   1.030     0.0     0.0     0.0     0.0     0.0     0.0
 AguaClar-138   -72.4     0.0     0.0     0.0     0.0     0.0     0.0
                                                 40.2%                  541 JUPIA----138  1   -45.2    10.1    45.0                05
                                                 36.0%                 1144 Mimoso---138  1    40.3   -10.0    40.3
                                                 39.6%                 1807 AguaClara-13  1     4.9     0.0     4.8
CEPEL - CENTRO DE PESQUISAS DE ENERGIA ELETRICA - PROGRAMA DE ANALISE DE REDES - V08MAR05A                                PAG. 331

ANUAL 06/07 * SETEMBRO 2006 PESADA S/SE 19H N/NE 19H * ANAT0 - FSE - C13
RELATORIO COMPLETO DO SISTEMA * AREA 26 * *             ENERSUL             *

X----------------- D A D O S  -  B A R R A -------------------------X------------ F L U X O S  -  C I R C U I T O S ------------X
 DA BARRA      TENSAO GERACAO INJ EQV  CARGA   ELO CC  SHUNT    MOTOR
 NUM. KV TIPO   MOD/     MW/     MW/     MW/     MW/   Mvar/     MW/
     NOME       ANG     Mvar    Mvar    Mvar    Mvar   EQUIV    Mvar  PARA BARRA                   FLUXOS
                                                FLUXO % SHUNT L         NUM.     NOME     NC     MW    Mvar  MVA/V_d   TAP  DEFAS TIE
X------------X-------X-------X-------X-------X-------X-------X-------X----X------------X--X-------X-------X-------X------X-----X---X

 1136  138  0   0.988     0.0     0.0     0.0     0.0    14.6     0.0
 CGCuiaba-138   -85.5     0.0     0.0     0.0     0.0     0.0     0.0
                                                 52.4%                 1082 CGrande--138  1   -49.7    -2.7    50.3                20
                                                 14.0%                 1133 CGCentro-138  1    13.2    -1.7    13.4
                                                 89.8%                 1816 CGCuiaba--13  1    19.7    10.2    22.4
                                                 46.9%                 1816 CGCuiaba--13  2    16.8     8.8    19.2
 1137  138  0   1.003     0.0     0.0    10.1     0.0     0.0     0.0
 Corumba--138   -97.3     0.0     0.0     0.0     0.0     0.0     0.0
                                                 17.3%                 1131 Aquidaua-138  1   -19.2    -3.0    19.4
                                                 17.1%                 1146 Miranda--138  1   -16.0    -3.5    16.4
                                                 65.5%                 1818 Corumba---13  1    12.7     3.3    13.1
                                                 63.8%                 1818 Corumba---13  2    12.4     3.2    12.8
 1138  138  0   1.002     0.0     0.0     0.0     0.0     0.0     0.0
```

```
 Sidrolan-138   -86.3     0.0     0.0     0.0     0.0     0.0     0.0
                                                13.1%                 1082 CGrande--138  1   -10.7     6.5    12.5                20
                                                 9.2%                 1145 Maracaju-138  1     0.2    -9.0     9.0
                                                43.0%                 1861 Sidroland-13  1    10.5     2.5    10.8
 1139  138  0   0.999     0.0     0.0     0.0     0.0     0.0     0.0
 DouMaxwe-138   -83.0     0.0     0.0     0.0     0.0     0.0     0.0
                                                33.8%                 1140 DouNacoe-138  1   -31.1    -9.0    32.4
                                                65.1%                 1820 DouMaxwel-13  1    15.6     4.5    16.3
                                                64.6%                 1820 DouMaxwel-13  2    15.5     4.5    16.1
 1140  138  0   1.004     0.0     0.0     0.0     0.0     0.0     0.0
 DouNacoe-138   -82.7     0.0     0.0     0.0     0.0     0.0     0.0
                                                44.9%                 1093 IvinhemF-138  1   -50.7    23.8    55.7
                                                24.8%                 1128 DouAlvor-138  1   -23.8    -1.9    23.8
                                                33.6%                 1139 DouMaxwe-138  1    31.2     8.8    32.3
                                                42.2%                 1142 DouSCruz-138  1   -40.5    -6.9    40.9
                                                30.0%                 1145 Maracaju-138  1    28.2   -18.5    33.6
                                                56.5%                 1821 DouNacoes-13  1    13.2     5.2    14.1
                                                30.2%                 1825 DouNacoes-69  1     7.6    -0.1     7.5 0.974*
                                                30.2%                 1825 DouNacoes-69  2     7.6    -0.1     7.5 0.974*
                                                16.5%                 1886 Caarapo--138  1    14.0    -7.5    15.8
                                                14.9%                 1887 Cruzalti-138  1    13.2    -2.7    13.4
 1141  138  0   1.010     0.0     0.0     0.0     0.0     0.0     0.0
 Eldorado-138   -65.7     0.0     0.0     0.0     0.0     0.0     0.0
                                                34.9%                 1091 EldoradF-138  1   -33.9     0.5    33.5                20
                                                79.4%                 1827 Eldorado--34  1    19.5     4.7    19.8
                                                15.6%                 1847 Navirai--138  1    14.4    -5.1    15.1
CEPEL - CENTRO DE PESQUISAS DE ENERGIA ELETRICA - PROGRAMA DE ANALISE DE REDES - V08MAR05A                                PAG. 332

ANUAL 06/07 * SETEMBRO 2006 PESADA S/SE 19H N/NE 19H * ANAT0 - FSE - C13
RELATORIO COMPLETO DO SISTEMA * AREA 26 * *             ENERSUL              *

X----------------- D A D O S  -  B A R R A -------------------------X------------ F L U X O S  -  C I R C U I T O S ------------X
 DA BARRA      TENSAO GERACAO INJ EQV  CARGA   ELO CC  SHUNT    MOTOR
 NUM. KV TIPO   MOD/     MW/     MW/     MW/     MW/   Mvar/     MW/
     NOME       ANG     Mvar    Mvar    Mvar    Mvar   EQUIV    Mvar  PARA BARRA                    FLUXOS
                                                FLUXO % SHUNT L         NUM.     NOME     NC     MW    Mvar  MVA/V_d   TAP  DEFAS TIE
X------------X-------X-------X-------X-------X-------X-------X-------X----X------------X--X-------X-------X-------X------X-----X---X

 1142  138  0   1.020     0.0     0.0     0.0     0.0     0.0     0.0
 DouSCruz-138   -81.1     0.0     0.0     0.0     0.0     0.0     0.0
                                                64.6%                 1086 Dourados-230  1   -48.9    -7.2    48.5 1.020*         20
                                                59.4%                 1086 Dourados-230  2   -45.1    -5.6    44.6 1.020*         20
                                                38.5%                 1128 DouAlvor-138  1    36.9     7.9    37.0
                                                41.9%                 1140 DouNacoe-138  1    40.9     6.2    40.6
                                                16.6%                 1143 FazItama-138  1    16.2    -1.3    15.9
 1143  138  0   1.010     0.0     0.0     2.0     0.0     0.0     0.0
 FazItama-138   -82.5     0.0     0.0     0.8     0.0     0.0     0.0
                                                16.7%                 1142 DouSCruz-138  1   -16.0    -2.2    16.0
                                                14.5%                 1880 PontPora-138  1    14.0     1.4    13.9
 1144  138  0   1.019     0.0     0.0     0.0     0.0     0.0     0.0
 Mimoso---138   -77.0     0.0     0.0     0.0     0.0     0.0     0.0
                                                33.9%                  541 JUPIA----138  2   -41.4    11.3    42.1                05
                                                34.0%                  541 JUPIA----138  3   -41.5    11.2    42.2                05
                                                34.0%                  541 JUPIA----138  4   -41.5    11.2    42.2                05
                                                40.7%                 1082 CGrande--138  1    45.7    -8.7    45.6                20
                                                37.0%                 1082 CGrande--138  2    45.9    -8.8    45.9                20
                                                39.6%                 1082 CGrande--138  3    48.9   -10.5    49.1                20
                                                39.6%                 1082 CGrande--138  4    48.9   -10.5    49.1                20
                                                56.9%                 1125 Mimoso-1---6  1    -5.8     0.1     5.7 1.000F
                                                79.7%                 1126 Mimoso-2---6  1   -20.0    -3.4    19.9 1.050F
```

```
                                                                35.0%                  1135 AguaClar-138  1   -39.2     8.1    39.2
 1145  138  0   1.017     0.0     0.0     0.0     0.0     0.0     0.0
 Maracaju-138   -86.7     0.0     0.0     0.0     0.0     0.0     0.0
                                                                27.2%                  1127 Jardim---138  1    18.7   -16.5    24.5
                                                                 2.6%                  1138 Sidrolan-138  1    -0.2     2.6     2.5
                                                                27.6%                  1140 DouNacoe-138  1   -27.4    15.5    30.9
                                                                74.1%                  1829 Maracaju--13  1     8.9    -1.6     8.9
 1146  138  0   1.023     0.0     0.0     0.0     0.0     0.0     0.0
 Miranda--138   -91.5     0.0     0.0     0.0     0.0     0.0     0.0
                                                                34.3%                  1131 Aquidaua-138  1   -32.2    10.0    32.9
                                                                19.4%                  1137 Corumba--138  1    16.6    -9.2    18.6
                                                                67.7%                  1830 Miranda---13  1     8.3    -0.5     8.1
                                                                 8.0%                  1881 CimEldor-138  1     7.2    -0.3     7.1
 1147  138  0   1.009     0.0     0.0     0.0     0.0     0.0     0.0
 NAndradi-138   -68.6     0.0     0.0     0.0     0.0     0.0     0.0
                                                                18.4%                  1096 NAndradF-138  1   -16.3    -3.7    16.6
                                                                66.3%                  1831 NAndradin-13  1    16.3     3.7    16.6
CEPEL - CENTRO DE PESQUISAS DE ENERGIA ELETRICA - PROGRAMA DE ANALISE DE REDES - V08MAR05A                                   PAG. 333

ANUAL 06/07 * SETEMBRO 2006 PESADA S/SE 19H N/NE 19H * ANAT0 - FSE - C13
RELATORIO COMPLETO DO SISTEMA * AREA 26 * *             ENERSUL              *

X----------------- D A D O S  -  B A R R A ------------------------X------------ F L U X O S  -  C I R C U I T O S ------------X
 DA BARRA      TENSAO GERACAO INJ EQV  CARGA   ELO CC  SHUNT    MOTOR
 NUM. KV TIPO   MOD/     MW/     MW/     MW/     MW/   Mvar/     MW/
     NOME       ANG     Mvar    Mvar    Mvar    Mvar   EQUIV    Mvar  PARA BARRA                    FLUXOS
                                                FLUXO % SHUNT L         NUM.     NOME     NC     MW    Mvar  MVA/V_d   TAP  DEFAS TIE
X------------X-------X-------X-------X-------X-------X-------X-------X----X------------X--X-------X-------X-------X------X-----X---X

 1148  138  0   0.996     0.0     0.0     0.0     0.0     0.0     0.0
 SGabriel-138   -91.0     0.0     0.0     0.0     0.0     0.0     0.0
                                                                30.2%                  1082 CGrande--138  1   -27.4     8.9    29.0                20
                                                                61.3%                  1832 SGabriel--34  1    12.2    -0.5    12.3
                                                                18.2%                  1893 RioVerde-138  1    15.2    -8.5    17.5
 1149  138  0   0.993     0.0     0.0     4.9     0.0     0.0     0.0
 AguasCGr-138   -84.8     0.0     0.0     0.0     0.0     0.0     0.0
                                                                41.5%                  1082 CGrande--138  1    -4.9     0.0     5.0                20
 1800    1  0   1.014     0.0     0.0    29.5     0.0    27.8     0.0
 CGAlmoxar-13   -88.5     0.0     0.0    10.4     0.0     0.0     0.0
                                                                41.1%                  1130 CGAlmoxi-138  1   -14.7     8.7    16.8 0.992*
                                                                41.3%                  1130 CGAlmoxi-138  2   -14.8     8.7    17.0 0.992*
 1801    1  0   1.014     0.0     0.0    11.2     0.0     0.0     0.0
 CGIndustr-13   -88.7     0.0     0.0     4.7     0.0     0.0     0.0
                                                                29.3%                  1891 CGIndust-138  1   -11.2    -4.7    12.0 1.045*
 1802   14  0   1.006     0.0     0.0    22.4     0.0     0.0     0.0
 CGLageado-13   -90.9     0.0     0.0    10.1     0.0     0.0     0.0
                                                                97.7%                  1129 CGLagead-138  1   -22.4   -10.1    24.4 1.063*
 1803   69  0   1.029     0.0     0.0     0.0     0.0     0.0     0.0
 Aquidauan-69   -96.4     0.0     0.0     0.0     0.0     0.0     0.0
                                                                61.7%                  1806 Aquidauan-13  1    -5.7     2.9     6.2
                                                                19.3%                  1850 Bonito----69  1     5.7    -2.9     6.2
 1804    1  0   1.013     0.0     0.0    27.3     0.0    12.9     0.0
 CGAScaffa-13   -89.6     0.0     0.0    10.3     0.0     0.0     0.0
                                                                47.1%                  1132 CGAScaff-138  1   -11.4     1.1    11.3 1.014*
                                                                63.2%                  1132 CGAScaff-138  2   -15.9     1.6    15.8 1.014*
 1805    1  0   1.007     0.0     0.0    12.9     0.0     0.0     0.0
 CGJAbrao--13   -89.4     0.0     0.0     5.9     0.0     0.0     0.0
                                                                34.3%                  1892 CGJAbrao-138  1   -12.9    -5.9    14.1 1.051*
 1806    1  0   1.030     0.0     0.0    16.7     0.0     0.0     0.0
 Aquidauan-13   -93.6     0.0     0.0     8.0     0.0     0.0     0.0
```

```
                                                 54.5%                 1131 Aquidaua-138  1   -22.4    -5.4    22.4
                                                 60.2%                 1803 Aquidauan-69  1     5.7    -2.5     6.0 1.025F
 1807   14  0   1.013     0.0     0.0     4.9     0.0     0.0     0.0
 AguaClara-13   -74.5     0.0     0.0    -0.2     0.0     0.0     0.0
                                                 40.3%                 1135 AguaClar-138  1    -4.9     0.2     4.8 0.983*
CEPEL - CENTRO DE PESQUISAS DE ENERGIA ELETRICA - PROGRAMA DE ANALISE DE REDES - V08MAR05A                          PAG. 334

ANUAL 06/07 * SETEMBRO 2006 PESADA S/SE 19H N/NE 19H * ANAT0 - FSE - C13
RELATORIO COMPLETO DO SISTEMA * AREA 26 * *             ENERSUL              *

X----------------- D A D O S  -  B A R R A -------------------------X------------ F L U X O S  -  C I R C U I T O S ------------X
 DA BARRA      TENSAO GERACAO INJ EQV  CARGA   ELO CC  SHUNT    MOTOR
 NUM. KV TIPO   MOD/     MW/     MW/     MW/     MW/   Mvar/     MW/
     NOME       ANG     Mvar    Mvar    Mvar    Mvar   EQUIV    Mvar  PARA BARRA                    FLUXOS
                                                FLUXO % SHUNT L         NUM.     NOME     NC     MW    Mvar  MVA/V_d   TAP  DEFAS TIE
X------------X-------X-------X-------X-------X-------X-------X-------X----X------------X--X-------X-------X-------X------X-----X---X

 1808   14  0   1.015     0.0     0.0     8.1     0.0     0.0     0.0
 Amambai---13   -88.7     0.0     0.0     0.0     0.0     0.0     0.0
                                                 66.5%                 1884 Amambai--138  1    -8.1     0.0     8.0 1.014*
 1809   14  0   1.013     0.0     0.0    10.1     0.0     0.0     0.0
 Coxim-----13   -96.9     0.0     0.0     0.6     0.0     0.0     0.0
                                                 49.9%                 1883 Coxim----138  1   -10.1    -0.6    10.0 1.027*
 1810   14  0   1.014     0.0     0.0     5.5     0.0     0.0     0.0
 ATabuado--13   -68.6     0.0     0.0     2.0     0.0     0.0     0.0
                                                 48.1%                 1854 ATaboado-138  1    -5.5    -2.0     5.8 1.004*
 1811   14  0   1.014     0.0     0.0    11.9     0.0     0.0     0.0
 Paranaiba-13   -68.5     0.0     0.0     0.7     0.0     0.0     0.0
                                                 47.0%                 1855 Paranaib-138  1   -11.9    -0.7    11.8 1.000*
 1812   14  0   1.030     0.0     0.0     8.2     0.0     0.0     0.0
 Cassilan--13   -66.9     0.0     0.0     1.3     0.0     0.0     0.0
                                                 67.2%                 1856 Cassilan-138  1    -8.2    -1.3     8.1 1.031*
 1813   14  0   1.014     0.0     0.0     6.3     0.0     0.0     0.0
 Chapadao--34   -60.1     0.0     0.0    -2.9     0.0     0.0     0.0
                                                 27.4%                 1857 Chapadao-138  1    -6.3     2.9     6.8 0.984*
 1814    1  0   1.006     0.0     0.0    23.9     0.0     0.0     0.0
 CGCentro--13   -93.0     0.0     0.0    12.0     0.0     0.0     0.0
                                                 64.8%                 1133 CGCentro-138  1   -23.9   -12.0    26.6 1.099*
 1815    1  0   1.013     0.0     0.0    44.6     0.0     0.0     0.0
 CGMCouto--13   -90.7     0.0     0.0    19.3     0.0     0.0     0.0
                                                 79.0%                 1134 CGMCouto-138  1   -14.7    -6.4    15.8 1.072*
                                                 81.7%                 1134 CGMCouto-138  2   -15.2    -6.6    16.3 1.072*
                                                 79.0%                 1134 CGMCouto-138  3   -14.7    -6.4    15.8 1.072*
 1816    1  0   1.013     0.0     0.0    36.5     0.0     0.0     0.0
 CGCuiaba--13   -90.4     0.0     0.0    15.2     0.0     0.0     0.0
                                                 84.0%                 1136 CGCuiaba-138  1   -19.7    -8.2    21.0 1.068*
                                                 43.9%                 1136 CGCuiaba-138  2   -16.8    -7.0    18.0 1.068*
 1818    1  0   1.030     0.0     0.0    25.1     0.0     5.7     0.0
 Corumba---13  -101.6     0.0     0.0    10.3     0.0     0.0     0.0
                                                 62.7%                 1137 Corumba--138  1   -12.7    -2.3    12.5 1.044*
                                                 61.1%                 1137 Corumba--138  2   -12.4    -2.3    12.2 1.044*
 1820    1  0   1.015     0.0     0.0    31.1     0.0     3.1     0.0
 DouMaxwel-13   -86.7     0.0     0.0    10.0     0.0     0.0     0.0
                                                 63.0%                 1139 DouMaxwe-138  1   -15.6    -3.5    15.8 1.032*
                                                 62.6%                 1139 DouMaxwe-138  2   -15.5    -3.4    15.6 1.032*
CEPEL - CENTRO DE PESQUISAS DE ENERGIA ELETRICA - PROGRAMA DE ANALISE DE REDES - V08MAR05A                          PAG. 335

ANUAL 06/07 * SETEMBRO 2006 PESADA S/SE 19H N/NE 19H * ANAT0 - FSE - C13
RELATORIO COMPLETO DO SISTEMA * AREA 26 * *             ENERSUL              *
```

```
X----------------- D A D O S  -  B A R R A -------------------------X------------ F L U X O S  -  C I R C U I T O S ------------X
 DA BARRA      TENSAO GERACAO INJ EQV  CARGA   ELO CC  SHUNT    MOTOR
 NUM. KV TIPO   MOD/     MW/     MW/     MW/     MW/   Mvar/     MW/
     NOME       ANG     Mvar    Mvar    Mvar    Mvar   EQUIV    Mvar  PARA BARRA                    FLUXOS
                                                FLUXO % SHUNT L        NUM.     NOME     NC     MW    Mvar  MVA/V_d   TAP  DEFAS TIE
X------------X-------X-------X-------X-------X-------X-------X-------X----X------------X--X-------X-------X-------X------X-----X---X

 1821   14  0   1.031     0.0     0.0    13.2     0.0     0.0     0.0
 DouNacoes-13   -85.8     0.0     0.0     4.4     0.0     0.0     0.0
                                               54.0%                   1140 DouNacoe-138  1   -13.2    -4.4    13.5 1.047*
 1822   14  0   1.015     0.0     0.0     2.4     0.0     0.0     0.0
 Cruzaltin-13   -84.4     0.0     0.0     0.0     0.0     0.0     0.0
                                               19.7%                   1887 Cruzalti-138  1    -2.4     0.0     2.4 1.014*
 1825   69  0   1.031     0.0     0.0     1.4     0.0     0.0     0.0
 DouNacoes-69   -83.6     0.0     0.0     0.0     0.0     0.0     0.0
                                               29.4%                   1140 DouNacoe-138  1    -7.6     0.2     7.4
                                               29.4%                   1140 DouNacoe-138  2    -7.6     0.2     7.4
                                               15.1%                   1838 PosOvidio-69  1     4.3    -2.5     4.8
                                               10.1%                   1839 Sanesul---69  1     3.3     0.0     3.2
                                               19.3%                   1842 FatimaSul-69  1     6.1     2.0     6.2
 1826    1  0   1.001     0.0     0.0    12.7     0.0     0.0     0.0
 DouAlvora-13   -85.1     0.0     0.0     6.4     0.0     0.0     0.0
                                               57.0%                   1128 DouAlvor-138  1   -12.7    -6.4    14.3 1.021*
 1827   14  0   1.030     0.0     0.0    19.5     0.0     0.0     0.0
 Eldorado--34   -70.4     0.0     0.0     3.0     0.0     0.0     0.0
                                               76.6%                   1141 Eldorado-138  1   -19.5    -3.0    19.2 1.036*
 1828   14  0   1.014     0.0     0.0    15.4     0.0     0.0     0.0
 Jardim----13   -94.4     0.0     0.0    -3.9     0.0     0.0     0.0
                                               62.6%                   1127 Jardim---138  1   -15.4     3.9    15.7 0.970*
 1829   14  0   1.030     0.0     0.0     8.9     0.0     0.0     0.0
 Maracaju--13   -90.5     0.0     0.0    -2.2     0.0     0.0     0.0
                                               74.1%                   1145 Maracaju-138  1    -8.9     2.2     8.9 0.999*
 1830   14  0   1.014     0.0     0.0     8.3     0.0     0.0     0.0
 Miranda---13   -95.3     0.0     0.0    -1.0     0.0     0.0     0.0
                                               68.7%                   1146 Miranda--138  1    -8.3     1.0     8.2 0.986*
 1831   14  0   1.014     0.0     0.0    16.3     0.0     0.0     0.0
 NAndradin-13   -72.4     0.0     0.0     2.6     0.0     0.0     0.0
                                               65.1%                   1147 NAndradi-138  1   -16.3    -2.6    16.3 1.018*
 1832   35  0   0.999     0.0     0.0    12.2     0.0     0.0     0.0
 SGabriel--34   -94.4     0.0     0.0    -1.2     0.0     0.0     0.0
                                               61.3%                   1148 SGabriel-138  1   -12.2     1.2    12.3 1.000*
 1833   14  0   1.013     0.0     0.0     4.9     0.0     0.0     0.0
 RioVerde--13   -94.4     0.0     0.0    -3.1     0.0     0.0     0.0
                                               28.6%                   1893 RioVerde-138  1    -4.9     3.1     5.7 0.999*
```





```
X----------------- D A D O S  -  B A R R A -------------------------X------------ F L U X O S  -  C I R C U I T O S ------------X
 DA BARRA      TENSAO GERACAO INJ EQV  CARGA   ELO CC  SHUNT    MOTOR
 NUM. KV TIPO   MOD/     MW/     MW/     MW/     MW/   Mvar/     MW/
     NOME       ANG     Mvar    Mvar    Mvar    Mvar   EQUIV    Mvar  PARA BARRA                    FLUXOS
                                                FLUXO % SHUNT L        NUM.     NOME     NC     MW    Mvar  MVA/V_d   TAP  DEFAS TIE
X------------X-------X-------X-------X-------X-------X-------X-------X----X------------X--X-------X-------X-------X------X-----X---X

 1835   69  0   1.030     0.0     0.0     6.5     0.0     0.0     0.0
 Ivinhema--69   -75.7     0.0     0.0     3.1     0.0     0.0     0.0
                                               42.6%                   1836 Ivinhema-FIC  1   -12.5    -4.2    12.8
                                               18.4%                   1844 Deodapoli-69  1     6.0     1.1     5.9
```

```
 1836    1  0   1.029     0.0     0.0     0.0     0.0     0.0     0.0
 Ivinhema-FIC   -75.8     0.0     0.0     0.0     0.0     0.0     0.0
                                                 42.6%                 1093 IvinhemF-138  1   -12.5    -4.2    12.8
                                                 42.6%                 1835 Ivinhema--69  1    12.5     4.2    12.8 1.000F
                                                  0.0%                 1837 Ivinhema--13  1     0.0     0.0     0.0 1.000F
 1837    1  0   1.029     0.0     0.0     0.0     0.0     0.0     0.0
 Ivinhema--13   -75.8     0.0     0.0     0.0     0.0     0.0     0.0
                                                  0.0%                 1836 Ivinhema-FIC  1     0.0     0.0     0.0
 1838   69  0   1.026     0.0     0.0     4.3     0.0     0.0     0.0
 PosOvidio-69   -85.5     0.0     0.0    -1.7     0.0     0.0     0.0
                                                 14.0%                 1825 DouNacoes-69  1    -4.3     1.7     4.5
 1839   69  0   1.028     0.0     0.0     0.6     0.0     0.0     0.0
 Sanesul---69   -83.9     0.0     0.0     0.0     0.0     0.0     0.0
                                                 10.1%                 1825 DouNacoes-69  1    -3.3    -0.2     3.2
                                                  8.2%                 1841 NAmerica--69  1     2.7     0.2     2.6
 1840   14  0   1.031     0.0     0.0    10.7     0.0     0.0     0.0
 RBrilhant-34   -86.4     0.0     0.0     0.7     0.0     0.0     0.0
                                                 41.6%                 1882 RBrilhan-138  1   -10.7    -0.7    10.4 1.038*
 1841   69  0   1.020     0.0     0.0     2.7     0.0     0.0     0.0
 NAmerica--69   -84.3     0.0     0.0     0.7     0.0     0.0     0.0
                                                  8.5%                 1839 Sanesul---69  1    -2.7    -0.7     2.7
 1842   69  0   1.006     0.0     0.0     5.9     0.0     0.0     0.0
 FatimaSul-69   -84.7     0.0     0.0     2.4     0.0     0.0     0.0
                                                 20.0%                 1825 DouNacoes-69  1    -5.9    -2.4     6.4
 1844   69  0   1.009     0.0     0.0     3.0     0.0     0.0     0.0
 Deodapoli-69   -76.8     0.0     0.0     0.8     0.0     0.0     0.0
                                                 18.8%                 1835 Ivinhema--69  1    -5.9    -1.6     6.0
                                                  9.1%                 1845 GloriaDou-69  1     2.8     0.8     2.9
 1845   69  0   1.004     0.0     0.0     2.8     0.0     0.0     0.0
 GloriaDou-69   -77.0     0.0     0.0     1.0     0.0     0.0     0.0
                                                  9.3%                 1844 Deodapoli-69  1    -2.8    -1.0     3.0
 1846   69  0   1.051     0.0     0.0     5.7     0.0     0.0     0.0
 Caarapo---69   -84.6     0.0     0.0    -0.4     0.0     0.0     0.0
                                                 18.2%                 1886 Caarapo--138  1    -5.7     0.4     5.5
```



```
X------------------ D A D O S  -  B A R R A -------------------------X------------- F L U X O S  -  C I R C U I T O S -------------X
 DA BARRA      TENSAO GERACAO INJ EQV  CARGA   ELO CC  SHUNT    MOTOR
 NUM. KV TIPO   MOD/     MW/     MW/     MW/     MW/   Mvar/     MW/
     NOME       ANG     Mvar    Mvar    Mvar    Mvar   EQUIV    Mvar  PARA BARRA                    FLUXOS
                                                FLUXO % SHUNT L         NUM.     NOME     NC     MW    Mvar  MVA/V_d   TAP  DEFAS TIE
X------------X-------X-------X-------X-------X-------X-------X-------X----X------------X--X-------X-------X-------X------X-----X---X

 1847  138  0   1.003     0.0     0.0     0.0     0.0     0.0     0.0
 Navirai--138   -67.7     0.0     0.0     0.0     0.0     0.0     0.0
                                                 14.6%                 1141 Eldorado-138  1   -14.2    -0.1    14.2
                                                 34.5%                 1848 Navirai---13  1    14.2     0.1    14.2
 1848   14  0   1.030     0.0     0.0    14.2     0.0     0.0     0.0
 Navirai---13   -71.0     0.0     0.0    -0.7     0.0     0.0     0.0
                                                 33.7%                 1847 Navirai--138  1   -14.2     0.7    13.8 1.025*
 1850   69  0   1.009     0.0     0.0     5.4     0.0     0.0     0.0
 Bonito----69  -101.2     0.0     0.0    -1.4     0.0     0.0     0.0
                                                 17.2%                 1803 Aquidauan-69  1    -5.4     1.4     5.5
 1851   14  0   1.030     0.0     0.0    13.9     0.0     0.0     0.0
 PontaPora-13   -86.8     0.0     0.0     3.6     0.0     0.0     0.0
                                                 55.8%                 1880 PontPora-138  1   -13.9    -3.6    13.9 1.049*
 1853  138  0   1.034     0.0     0.0     0.0     0.0    -5.3     0.0
```

```
 Selviria-138   -66.2     0.0     0.0     0.0     0.0     0.0     0.0
                                                45.3%                 647 ISOLTEIRA138  1    31.4   -20.4    36.2                06
                                                 5.5%                1854 ATaboado-138  1     2.3     4.9     5.3
                                                42.6%                1903 3LAGOAS-Y138  1   -33.7    10.2    34.1                06
 1854  138  0   1.026     0.0     0.0     0.0     0.0     0.0     0.0
 ATaboado-138   -66.2     0.0     0.0     0.0     0.0     0.0     0.0
                                                48.3%                1810 ATabuado--13  1     5.5     2.3     5.8
                                                 8.5%                1853 Selviria-138  1    -2.3    -8.1     8.2
                                                 6.7%                1855 Paranaib-138  1    -3.2     5.8     6.5
 1855  138  0   1.018     0.0     0.0     0.0     0.0     0.0     0.0
 Paranaib-138   -65.8     0.0     0.0     0.0     0.0     0.0     0.0
                                                47.0%                1811 Paranaiba-13  1    11.9     1.3    11.8
                                                 9.9%                1854 ATaboado-138  1     3.2    -9.2     9.6
                                                19.1%                1856 Cassilan-138  1   -15.1     7.9    16.8
 1856  138  0   1.011     0.0     0.0     0.0     0.0    -5.1     0.0
 Cassilan-138   -63.2     0.0     0.0     0.0     0.0     0.0     0.0
                                                69.3%                1812 Cassilan--13  1     8.2     1.9     8.3
                                                22.6%                1855 Paranaib-138  1    15.5   -12.8    19.9
                                                27.4%                1857 Chapadao-138  1   -23.7     5.9    24.2
 1857  138  0   1.019     0.0     0.0     0.0     0.0    -5.2     0.0
 Chapadao-138   -58.8     0.0     0.0     0.0     0.0     0.0     0.0
                                                26.9%                1813 Chapadao--34  1     6.3    -2.7     6.7
                                                29.9%                1856 Cassilan-138  1    24.5   -10.8    26.3
                                                11.5%                1858 CostRica-138  1   -10.1     2.2    10.1
                                                22.1%                1859 Paraiso--2GR  1   -20.7     6.2    21.2
CEPEL - CENTRO DE PESQUISAS DE ENERGIA ELETRICA - PROGRAMA DE ANALISE DE REDES - V08MAR05A                                PAG. 338

ANUAL 06/07 * SETEMBRO 2006 PESADA S/SE 19H N/NE 19H * ANAT0 - FSE - C13
RELATORIO COMPLETO DO SISTEMA * AREA 26 * *             ENERSUL              *

X----------------- D A D O S  -  B A R R A ------------------------X------------ F L U X O S  -  C I R C U I T O S ------------X
 DA BARRA      TENSAO GERACAO INJ EQV  CARGA   ELO CC  SHUNT    MOTOR
 NUM. KV TIPO   MOD/     MW/     MW/     MW/     MW/   Mvar/     MW/
     NOME       ANG     Mvar    Mvar    Mvar    Mvar   EQUIV    Mvar  PARA BARRA                    FLUXOS
                                                FLUXO % SHUNT L         NUM.     NOME     NC     MW    Mvar  MVA/V_d   TAP  DEFAS TIE
X------------X-------X-------X-------X-------X-------X-------X-------X----X------------X--X-------X-------X-------X------X-----X---X

 1858  138  0   1.021     0.0     0.0     0.0     0.0     0.0     0.0
 CostRica-138   -57.6     0.0     0.0     0.0     0.0     0.0     0.0
                                                13.3%                1857 Chapadao-138  1    10.2    -6.3    11.7
                                                46.9%                1860 CostRica-2GR  1   -10.2     6.3    11.7
 1859  138  1   1.020    21.0     0.0     0.0     0.0    -5.2     0.0
 Paraiso--2GR   -56.9    -3.8     0.0     0.0     0.0     0.0     0.0
                                                23.3%                1857 Chapadao-138  1    21.0    -9.0    22.4
 1860    1  1   1.000    16.2     0.0     6.0     0.0     0.0     0.0
 CostRica-2GR   -55.7    -4.4     0.0     1.4     0.0     0.0     0.0
                                                46.9%                1858 CostRica-138  1    10.2    -5.8    11.7 1.000F
 1861    1  0   1.000     0.0     0.0    10.5     0.0     0.0     0.0
 Sidroland-13   -88.8     0.0     0.0     2.0     0.0     0.0     0.0
                                                42.8%                1138 Sidrolan-138  1   -10.5    -2.0    10.7 1.007*
 1880  138  0   0.999     0.0     0.0     0.0     0.0     0.0     0.0
 PontPora-138   -83.5     0.0     0.0     0.0     0.0     0.0     0.0
                                                15.2%                1143 FazItama-138  1   -13.9    -4.5    14.6
                                                58.5%                1851 PontaPora-13  1    13.9     4.5    14.6
 1881  138  0   1.016     0.0     0.0     7.2     0.0     0.0     0.0
 CimEldor-138   -92.0     0.0     0.0     3.1     0.0     0.0     0.0
                                                 8.7%                1146 Miranda--138  1    -7.2    -3.1     7.7
 1882  138  0   0.997     0.0     0.0     0.0     0.0     0.0     0.0
 RBrilhan-138   -83.9     0.0     0.0     0.0     0.0     0.0     0.0
                                                43.2%                1840 RBrilhant-34  1    10.7     1.2    10.8
```

```
                                                 12.0%                 1887 Cruzalti-138  1   -10.7    -1.2    10.8
 1883  138  0   0.992     0.0     0.0     0.0     0.0     0.0     0.0
 Coxim----138   -93.5     0.0     0.0     0.0     0.0     0.0     0.0
                                                 51.3%                 1809 Coxim-----13  1    10.1     1.2    10.3
                                                 10.7%                 1893 RioVerde-138  1   -10.1    -1.2    10.3
 1884  138  0   1.003     0.0     0.0     0.0     0.0     0.0     0.0
 Amambai--138   -84.9     0.0     0.0     0.0     0.0     0.0     0.0
                                                 67.5%                 1808 Amambai---13  1     8.1     0.5     8.1
                                                  8.4%                 1886 Caarapo--138  1    -8.1    -0.5     8.1
 1886  138  0   1.005     0.0     0.0     0.0     0.0     0.0     0.0
 Caarapo--138   -83.9     0.0     0.0     0.0     0.0     0.0     0.0
                                                 15.1%                 1140 DouNacoe-138  1   -13.9     4.6    14.5
                                                 19.0%                 1846 Caarapo---69  1     5.7    -0.4     5.7 0.957*
                                                  9.5%                 1884 Amambai--138  1     8.2    -4.2     9.1
CEPEL - CENTRO DE PESQUISAS DE ENERGIA ELETRICA - PROGRAMA DE ANALISE DE REDES - V08MAR05A                                PAG. 339

ANUAL 06/07 * SETEMBRO 2006 PESADA S/SE 19H N/NE 19H * ANAT0 - FSE - C13
RELATORIO COMPLETO DO SISTEMA * AREA 26 * *             ENERSUL             *

X----------------- D A D O S  -  B A R R A -------------------------X------------ F L U X O S  -  C I R C U I T O S ------------X
 DA BARRA      TENSAO GERACAO INJ EQV  CARGA   ELO CC  SHUNT    MOTOR
 NUM. KV TIPO   MOD/     MW/     MW/     MW/     MW/   Mvar/     MW/
     NOME       ANG     Mvar    Mvar    Mvar    Mvar   EQUIV    Mvar  PARA BARRA                    FLUXOS
                                                FLUXO % SHUNT L         NUM.     NOME     NC     MW    Mvar  MVA/V_d   TAP  DEFAS TIE
X------------X-------X-------X-------X-------X-------X-------X-------X----X------------X--X-------X-------X-------X------X-----X---X

 1887  138  0   1.001     0.0     0.0     0.0     0.0     0.0     0.0
 Cruzalti-138   -83.3     0.0     0.0     0.0     0.0     0.0     0.0
                                                 14.6%                 1140 DouNacoe-138  1   -13.1     0.9    13.2
                                                 20.0%                 1822 Cruzaltin-13  1     2.4     0.0     2.4
                                                 12.0%                 1882 RBrilhan-138  1    10.7    -0.9    10.8
 1890  138  0   1.000     0.0     0.0     0.0     0.0     0.0     0.0
 CGImbiru-138   -85.4     0.0     0.0     0.0     0.0     0.0     0.0
                                                  0.0%                  923 WARJONA4-000  1     0.0     0.0     0.0 1.050F        19
                                                  0.0%                  924 WARJONA5-000  1     0.0     0.0     0.0 1.050F        19
                                                 64.2%                  927 WARJONA1-1GR  1   -32.0    -3.0    32.1 1.050F        19
                                                 64.2%                  928 WARJONA2-1GR  1   -32.0    -3.0    32.1 1.050F        19
                                                 64.2%                  929 WARJONA3-1GR  1   -32.0    -3.1    32.1 1.050F        19
                                                 26.6%                 1129 CGLagead-138  1    15.0    20.7    25.5
                                                 26.2%                 1130 CGAlmoxi-138  1    24.2    -7.2    25.2
                                                 19.6%                 1131 Aquidaua-138  1    10.8   -15.4    18.9
                                                 19.6%                 1131 Aquidaua-138  2    10.8   -15.4    18.9
                                                 20.7%                 1891 CGIndust-138  1    21.0    14.9    25.7
                                                 14.7%                 1892 CGJAbrao-138  1    14.1    11.5    18.2
 1891  138  0   0.995     0.0     0.0     0.0     0.0     0.0     0.0
 CGIndust-138   -85.6     0.0     0.0     0.0     0.0     0.0     0.0
                                                 30.6%                 1801 CGIndustr-13  1    11.2     5.4    12.5
                                                 21.0%                 1890 CGImbiru-138  1   -20.9   -15.2    26.0
                                                 11.2%                 1892 CGJAbrao-138  1     9.7     9.8    13.9
 1892  138  0   0.990     0.0     0.0     0.0     0.0     0.0     0.0
 CGJAbrao-138   -85.7     0.0     0.0     0.0     0.0     0.0     0.0
                                                 13.4%                 1133 CGCentro-138  1    10.8    16.3    19.8
                                                 36.0%                 1805 CGJAbrao--13  1    12.9     7.0    14.8
                                                 15.4%                 1890 CGImbiru-138  1   -14.0   -12.6    19.1
                                                 11.7%                 1891 CGIndust-138  1    -9.7   -10.6    14.5
 1893  138  0   0.997     0.0     0.0     0.0     0.0     0.0     0.0
 RioVerde-138   -92.8     0.0     0.0     0.0     0.0     0.0     0.0
                                                 16.5%                 1148 SGabriel-138  1   -15.1     4.8    15.8
                                                 28.6%                 1833 RioVerde--13  1     4.9    -2.9     5.7
                                                 10.8%                 1883 Coxim----138  1    10.2    -1.8    10.4
```

```
 1895  138  0   1.029     0.0     0.0     2.5     0.0    -5.3     0.0
 PMurtinh-138   -91.8     0.0     0.0     1.3     0.0     0.0     0.0
                                                 7.1%                 1127 Jardim---138  1    -2.5    -6.6     6.9
CEPEL - CENTRO DE PESQUISAS DE ENERGIA ELETRICA - PROGRAMA DE ANALISE DE REDES - V08MAR05A                                PAG. 340

ANUAL 06/07 * SETEMBRO 2006 PESADA S/SE 19H N/NE 19H * ANAT0 - FSE - C13


TOTAIS DA AREA 26


X--------X--------X--------X--------X--------X--------X--------X--------X
  GERACAO  INJ EQV   CARGA   ELO CC    SHUNT   EXPORT   IMPORT   PERDAS
    MW/      MW/      MW/      MW/     Mvar/     MW/      MW/      MW/
   Mvar     Mvar     Mvar     Mvar     EQUIV    Mvar     Mvar     Mvar
X--------X--------X--------X--------X--------X--------X--------X--------X

     66.7      0.0    574.3      0.0     52.9    211.1    761.9     43.2
     -2.2      0.0    139.1      0.0      0.0    105.1     79.3   -114.2
CEPEL - CENTRO DE PESQUISAS DE ENERGIA ELETRICA - PROGRAMA DE ANALISE DE REDES - V08MAR05A                                PAG. 341

ANUAL 06/07 * SETEMBRO 2006 PESADA S/SE 19H N/NE 19H * ANAT0 - FSE - C13
RELATORIO COMPLETO DO SISTEMA * AREA 27 * *             E M A E             *

X----------------- D A D O S  -  B A R R A -------------------------X------------ F L U X O S  -  C I R C U I T O S ------------X
 DA BARRA      TENSAO GERACAO INJ EQV  CARGA   ELO CC  SHUNT    MOTOR
 NUM. KV TIPO   MOD/     MW/     MW/     MW/     MW/   Mvar/     MW/
     NOME       ANG     Mvar    Mvar    Mvar    Mvar   EQUIV    Mvar  PARA BARRA                    FLUXOS
                                                FLUXO % SHUNT L         NUM.     NOME     NC     MW    Mvar  MVA/V_d   TAP  DEFAS TIE
X------------X-------X-------X-------X-------X-------X-------X-------X----X------------X--X-------X-------X-------X------X-----X---X

  400    1 -1   0.985    19.0     0.0     0.5     0.0     0.0     0.0
 HBORD-88-7GR   -97.4   124.0     0.0     0.0     0.0     0.0     0.0
                                                32.2%                 481 H.BORDEN--88  1    18.5   124.0   127.3
  401    1  1   1.010    15.0     0.0     0.5     0.0     0.0     0.0
 HBORD230-4GR   -90.5    86.9     0.0     0.0     0.0     0.0     0.0
                                                18.0%                 480 H.BORDEN-230  1    14.5    86.9    87.2
  403    1 -1   0.936     0.0     0.0     6.0     0.0     0.0     0.0
 PIR-13.8-000   -99.3     0.0     0.0     0.0     0.0     0.0     0.0
                                                 3.2%                 485 PIRATINI-088  1    -6.0     0.0     6.4               04
  404    1 -1   0.975     0.0     0.0    12.0     0.0     0.0     0.0
 PIR-14.4-000   -91.7     0.0     0.0     0.0     0.0     0.0     0.0
                                                 4.6%                 484 PIRATINI-230  1   -12.0     0.0    12.3               04
  405    1 -1   0.999     0.0     0.0     0.0     0.0     0.0     0.0
 N.PIRAT1-000   -90.9     0.0     0.0     0.0     0.0     0.0     0.0
                                                 0.0%                 484 PIRATINI-230  1     0.0     0.0     0.0               04
  406    1 -1   0.960     0.0     0.0     0.0     0.0     0.0     0.0
 N.PIRAT2-000   -98.9     0.0     0.0     0.0     0.0     0.0     0.0
                                                 0.0%                 485 PIRATINI-088  1     0.0     0.0     0.0               04
  480  230  0   1.025     0.0     0.0     0.0     0.0     0.0     0.0
 H.BORDEN-230   -90.9     0.0     0.0     0.0     0.0     0.0     0.0
                                                17.1%                 401 HBORD230-4GR  1   -14.5   -83.9    83.1 1.050F
                                                 6.9%                 472 BAIXADA--230  1   -42.7    -6.0    42.1               04
                                                 5.4%                 477 CARBOCL--230  1    37.5    10.3    37.9               41
                                                25.6%                 484 PIRATINI-230  1    19.8    79.6    80.0               04
  481    1  0   1.003     0.0     0.0     0.0     0.0     0.0     0.0
 H.BORDEN--88   -97.7     0.0     0.0     0.0     0.0     0.0     0.0
                                                30.7%                 400 HBORD-88-7GR  1   -18.5  -120.2   121.2 1.050F
                                                73.4%                 470 CARBOCLORO88  1   -86.8     1.5    86.6               42
```

```
                                                 75.1%                 473 BAIXADA--088  1   -88.8    -3.2    88.6                04
                                                 75.1%                 473 BAIXADA--088  2   -88.8    -3.2    88.6                04
                                                 77.4%                 473 BAIXADA--088  6  -106.8    -9.4   106.9                04
                                                 66.5%                3417 HBO-BSA56-88  5   -91.9    -4.8    91.8                42
                                                 65.5%                3477 AGA+PETC--88  1   -77.4     4.4    77.3                42
                                                  4.1%                3481 HBO-----88    1   405.1    71.2   410.0                42
                                                 86.2%                3497 D2.ETDIMIGR   1   106.8    51.1   118.1                28
                                                 35.6%                3498 D1.ETDIMIGR   1    47.2    12.6    48.7                28
CEPEL - CENTRO DE PESQUISAS DE ENERGIA ELETRICA - PROGRAMA DE ANALISE DE REDES - V08MAR05A                                PAG. 342

ANUAL 06/07 * SETEMBRO 2006 PESADA S/SE 19H N/NE 19H * ANAT0 - FSE - C13


TOTAIS DA AREA 27


X--------X--------X--------X--------X--------X--------X--------X--------X
  GERACAO  INJ EQV   CARGA   ELO CC    SHUNT   EXPORT   IMPORT   PERDAS
    MW/      MW/      MW/      MW/     Mvar/     MW/      MW/      MW/
   Mvar     Mvar     Mvar     Mvar     EQUIV    Mvar     Mvar     Mvar
X--------X--------X--------X--------X--------X--------X--------X--------X

     34.0      0.0     19.0      0.0      0.0    611.8    603.1      6.3
    210.9      0.0      0.0      0.0      0.0    209.6     31.9     33.2
CEPEL - CENTRO DE PESQUISAS DE ENERGIA ELETRICA - PROGRAMA DE ANALISE DE REDES - V08MAR05A                                PAG. 343

ANUAL 06/07 * SETEMBRO 2006 PESADA S/SE 19H N/NE 19H * ANAT0 - FSE - C13
RELATORIO COMPLETO DO SISTEMA * AREA 28 * *           ELETROPAULO            *

X----------------- D A D O S  -  B A R R A -------------------------X------------ F L U X O S  -  C I R C U I T O S -------------X
 DA BARRA      TENSAO GERACAO INJ EQV  CARGA   ELO CC  SHUNT    MOTOR
 NUM. KV TIPO   MOD/     MW/     MW/     MW/     MW/   Mvar/     MW/
     NOME       ANG     Mvar    Mvar    Mvar    Mvar   EQUIV    Mvar  PARA BARRA                    FLUXOS
                                                FLUXO % SHUNT L         NUM.     NOME     NC     MW    Mvar  MVA/V_d   TAP  DEFAS TIE
X------------X-------X-------X-------X-------X-------X-------X-------X----X------------X--X-------X-------X-------X------X-----X---X

  483    1  0   0.960     0.0     0.0     0.0     0.0     0.0     0.0
 PED-RBO--088   -98.9     0.0     0.0     0.0     0.0     0.0     0.0
                                                 0.0%                 3490 D2.ETDRBONIT  1     0.0     0.0     0.0
                                                 0.0%                 3491 D1.ETDRBONIT  1     0.0     0.0     0.0
                                                 0.0%                 3495 INTER PE-PIR  1     0.0     0.0     0.0
                                                 0.0%                 3495 INTER PE-PIR  2     0.0     0.0     0.0
 3411    1  0   1.040     0.0     0.0   498.6     0.0     0.0     0.0
 E.SOUZA--088  -101.6     0.0     0.0   162.0     0.0     0.0     0.0
                                                 5.0%                  411 E.SOUZA--088  1  -498.6  -162.0   504.2                04
 3413    1  0   0.999     0.0     0.0    97.0     0.0     0.0     0.0
 B.JARDIM-088   -96.9     0.0     0.0    36.5     0.0     0.0     0.0
                                                42.5%                  576 B.JARDIM-088  1   -97.0   -36.5   103.7                05
 3416    1  0   0.999     0.0     0.0     0.0     0.0     0.0     0.0
 OESTE-EL88KV   -93.0     0.0     0.0     0.0     0.0     0.0     0.0
                                                 0.0%                  415 OESTE----088  1     0.0     0.0     0.0                04
 3422    1  0   1.000     0.0     0.0   522.8     0.0     0.0     0.0
 PIRITUBA-088  -104.6     0.0     0.0   199.6     0.0     0.0     0.0
                                                 5.6%                  422 PIRITUBA-088  1  -522.8  -199.6   559.7                04
 3428    1  0   0.955     0.0     0.0   128.6     0.0     0.0     0.0
 CENTRO---088  -100.6     0.0     0.0     5.1     0.0     0.0     0.0
                                                 1.3%                  428 CENTRO----88  1  -128.6    -5.1   134.7                04
 3429    1  0   1.025     0.0     0.0   154.9     0.0     0.0     0.0
 CENTRO---020  -100.6     0.0     0.0    63.1     0.0     0.0     0.0
```

```
                                                                  1.6%                  429 CENTRO----20  1  -154.9   -63.1   163.2              04
 3436    1  0   0.999     0.0     0.0   455.6     0.0     0.0     0.0
 NORTE----088   -95.5     0.0     0.0    84.6     0.0     0.0     0.0
                                                                  4.6%                  436 NORTE----088  1  -455.6   -84.6   463.7              04
 3440    1  0   1.024     0.0     0.0    53.7     0.0     0.0     0.0
 M.REALE--020   -92.4     0.0     0.0    20.7     0.0     0.0     0.0
                                                                  0.6%                  440 REALE----020  1   -53.7   -20.7    56.2              04
 3441    1  0   0.999     0.0     0.0   122.3     0.0     0.0     0.0
 M.REALE -088   -91.5     0.0     0.0    28.3     0.0     0.0     0.0
                                                                  1.3%                  441 M.REALE -088  1  -122.3   -28.3   125.6              04
 3443    1  0   1.000     0.0     0.0   289.1     0.0     0.0     0.0
 NORDESTE-088   -99.3     0.0     0.0   103.0     0.0     0.0     0.0
                                                                  3.1%                  443 NORDESTE--88  1  -289.1  -103.0   306.9              04
CEPEL - CENTRO DE PESQUISAS DE ENERGIA ELETRICA - PROGRAMA DE ANALISE DE REDES - V08MAR05A                                          PAG. 344

ANUAL 06/07 * SETEMBRO 2006 PESADA S/SE 19H N/NE 19H * ANAT0 - FSE - C13
RELATORIO COMPLETO DO SISTEMA * AREA 28 * *           ELETROPAULO            *

X----------------- D A D O S  -  B A R R A ------------------------X------------ F L U X O S  -  C I R C U I T O S ------------X
 DA BARRA      TENSAO GERACAO INJ EQV  CARGA   ELO CC  SHUNT    MOTOR
 NUM. KV TIPO   MOD/     MW/     MW/     MW/     MW/   Mvar/     MW/
     NOME       ANG     Mvar    Mvar    Mvar    Mvar   EQUIV    Mvar  PARA BARRA                    FLUXOS
                                                FLUXO % SHUNT L         NUM.     NOME     NC     MW    Mvar  MVA/V_d   TAP  DEFAS TIE
X------------X-------X-------X-------X-------X-------X-------X-------X----X------------X--X-------X-------X-------X------X-----X---X

 3465    1  0   0.999     0.0     0.0   738.4     0.0     0.0     0.0
 LESTE----088   -96.8     0.0     0.0   126.0     0.0     0.0     0.0
                                                                  7.5%                  465 LESTE----088  1  -738.4  -126.0   749.7              04
 3467    1  0   0.999     0.0     0.0   487.9     0.0     0.0     0.0
 RAMON----088   -93.2     0.0     0.0   154.9     0.0     0.0     0.0
                                                                  5.1%                  467 RAMON R F-88  1  -487.9  -154.9   512.3              04
 3473    1  0   1.010     0.0     0.0    67.9     0.0     0.0     0.0
 BAIXADA--088   -96.2     0.0     0.0     3.4     0.0     0.0     0.0
                                                                  0.7%                  473 BAIXADA--088  1   -67.9    -3.4    67.3              04
 3475    1  0   0.976     0.0     0.0   521.4     0.0     0.0     0.0
 SUL1-----088  -101.7     0.0     0.0   122.8     0.0     0.0     0.0
                                                                  5.5%                  475 SUL1------88  1  -521.4  -122.8   548.7              04
 3476    1  0   0.976     0.0     0.0   476.3     0.0     0.0     0.0
 SUL2-----088  -100.0     0.0     0.0   117.2     0.0     0.0     0.0
                                                                  5.0%                  476 SUL2------88  1  -476.3  -117.2   502.4              04
 3484   88  0   0.883     0.0     0.0     0.0     0.0     0.0     0.0
 D2.ETDVARGIN  -110.6     0.0     0.0     0.0     0.0     0.0     0.0
                                                                 66.8%                 3488 ETD2.VARGINH  1    46.8     9.6    54.1
                                                                 46.7%                 3490 D2.ETDRBONIT  1    54.9    13.1    63.9
                                                                 86.2%                 3497 D2.ETDIMIGR   1  -101.7   -22.7   118.1
 3485    1  0   0.960     0.0     0.0   327.3     0.0     0.0     0.0
 PIRATINI-088   -99.0     0.0     0.0   107.1     0.0     0.0     0.0
                                                                  3.6%                  485 PIRATINI-088  1  -327.3  -107.1   358.8              04
 3487   88  0   0.967     0.0     0.0     0.0     0.0     0.0     0.0
 D1.ETDVARGIN  -102.7     0.0     0.0     0.0     0.0     0.0     0.0
                                                                 47.2%                 3489 ETD1.VARGINH  1    36.6     5.6    38.2
                                                                  0.0%                 3491 D1.ETDRBONIT  1     0.0     0.0     0.0
                                                                 27.9%                 3498 D1.ETDIMIGR   1   -36.6    -5.6    38.2
 3488   88  0   0.874     0.0     0.0    46.5     0.0     0.0     0.0
 ETD2.VARGINH  -111.5     0.0     0.0     8.8     0.0     0.0     0.0
                                                                 66.8%                 3484 D2.ETDVARGIN  1   -46.5    -8.8    54.1
 3489   88  0   0.962     0.0     0.0    36.4     0.0     0.0     0.0
 ETD1.VARGINH  -103.3     0.0     0.0     5.2     0.0     0.0     0.0
                                                                 47.2%                 3487 D1.ETDVARGIN  1   -36.4    -5.2    38.2
CEPEL - CENTRO DE PESQUISAS DE ENERGIA ELETRICA - PROGRAMA DE ANALISE DE REDES - V08MAR05A                                          PAG. 345
```

```
ANUAL 06/07 * SETEMBRO 2006 PESADA S/SE 19H N/NE 19H * ANAT0 - FSE - C13
RELATORIO COMPLETO DO SISTEMA * AREA 28 * *           ELETROPAULO            *

X----------------- D A D O S  -  B A R R A -------------------------X------------ F L U X O S  -  C I R C U I T O S ------------X
 DA BARRA      TENSAO GERACAO INJ EQV  CARGA   ELO CC  SHUNT    MOTOR
 NUM. KV TIPO   MOD/     MW/     MW/     MW/     MW/   Mvar/     MW/
     NOME       ANG     Mvar    Mvar    Mvar    Mvar   EQUIV    Mvar  PARA BARRA                    FLUXOS
                                                FLUXO % SHUNT L        NUM.     NOME     NC     MW    Mvar  MVA/V_d   TAP  DEFAS TIE
X------------X-------X-------X-------X-------X-------X-------X-------X----X------------X--X-------X-------X-------X------X-----X---X

 3490   88  0   0.875     0.0     0.0     0.0     0.0     0.0     0.0
 D2.ETDRBONIT  -111.8     0.0     0.0     0.0     0.0     0.0     0.0
                                                 0.0%                   483 PED-RBO--088  1     0.0     0.0     0.0
                                                46.7%                  3484 D2.ETDVARGIN  1   -54.7   -11.9    63.9
                                                78.9%                  3492 ETD.RBONITO   1    54.7    11.9    63.9
 3491   88  0   0.967     0.0     0.0     0.0     0.0     0.0     0.0
 D1.ETDRBONIT  -102.7     0.0     0.0     0.0     0.0     0.0     0.0
                                                 0.0%                   483 PED-RBO--088  1     0.0     0.0     0.0
                                                 0.0%                  3487 D1.ETDVARGIN  1     0.0     0.0     0.0
                                                 0.0%                  3492 ETD.RBONITO   1     0.0     0.0     0.0
 3492   88  0   0.869     0.0     0.0    54.4     0.0     0.0     0.0
 ETD.RBONITO   -112.4     0.0     0.0    11.2     0.0     0.0     0.0
                                                78.9%                  3490 D2.ETDRBONIT  1   -54.4   -11.2    63.9
                                                 0.0%                  3491 D1.ETDRBONIT  1     0.0     0.0     0.0
 3493    1  0   1.000     0.0     0.0   967.1     0.0     0.0     0.0
 BANDEIRA-088  -101.1     0.0     0.0   261.0     0.0     0.0     0.0
                                                10.0%                   493 BANDEIRA-088  1  -967.1  -261.0  1002.1               04
 3494    1  0   1.000     0.0     0.0   143.6     0.0     0.0     0.0
 BANDEIRA-034   -95.0     0.0     0.0    51.8     0.0     0.0     0.0
                                                 1.5%                   494 BANDEIR-34.5  1  -143.6   -51.8   152.7               04
 3495   88  0   0.960     0.0     0.0     0.0     0.0     0.0     0.0
 INTER PE-PIR   -98.9     0.0     0.0     0.0     0.0     0.0     0.0
                                                 0.0%                   483 PED-RBO--088  1     0.0     0.0     0.0
                                                 0.0%                   483 PED-RBO--088  2     0.0     0.0     0.0
                                                 0.0%                   485 PIRATINI-088  1     0.0     0.0     0.0               04
 3496    1  0   1.000     0.0     0.0   807.0     0.0     0.0     0.0
 MFORNAS--088  -101.1     0.0     0.0   233.9     0.0     0.0     0.0
                                                 8.4%                   496 M.FORNAS--88  1  -807.0  -233.9   840.5               04
 3497   88  0   0.914     0.0     0.0     0.0     0.0     0.0     0.0
 D2.ETDIMIGR   -106.4     0.0     0.0     0.0     0.0     0.0     0.0
                                                86.2%                   481 H.BORDEN--88  1  -103.3   -31.3   118.1               27
                                                86.2%                  3484 D2.ETDVARGIN  1   103.3    31.3   118.1
                                                 0.0%                  3499 ETD.IMIGRANT  1     0.0     0.0     0.0
 3498   88  0   0.975     0.0     0.0     0.0     0.0     0.0     0.0
 D1.ETDIMIGR   -101.4     0.0     0.0     0.0     0.0     0.0     0.0
                                                35.6%                   481 H.BORDEN--88  1   -46.6    -9.2    48.7               27
                                                27.9%                  3487 D1.ETDVARGIN  1    36.7     6.5    38.2
                                                13.0%                  3499 ETD.IMIGRANT  1     9.9     2.7    10.5
CEPEL - CENTRO DE PESQUISAS DE ENERGIA ELETRICA - PROGRAMA DE ANALISE DE REDES - V08MAR05A                                PAG. 346

ANUAL 06/07 * SETEMBRO 2006 PESADA S/SE 19H N/NE 19H * ANAT0 - FSE - C13
RELATORIO COMPLETO DO SISTEMA * AREA 28 * *           ELETROPAULO            *

X----------------- D A D O S  -  B A R R A -------------------------X------------ F L U X O S  -  C I R C U I T O S ------------X
 DA BARRA      TENSAO GERACAO INJ EQV  CARGA   ELO CC  SHUNT    MOTOR
 NUM. KV TIPO   MOD/     MW/     MW/     MW/     MW/   Mvar/     MW/
     NOME       ANG     Mvar    Mvar    Mvar    Mvar   EQUIV    Mvar  PARA BARRA                    FLUXOS
                                                FLUXO % SHUNT L        NUM.     NOME     NC     MW    Mvar  MVA/V_d   TAP  DEFAS TIE
X------------X-------X-------X-------X-------X-------X-------X-------X----X------------X--X-------X-------X-------X------X-----X---X
```

```
 3499   88  0   0.975     0.0     0.0     9.9     0.0     0.0     0.0
 ETD.IMIGRANT  -101.4     0.0     0.0     2.7     0.0     0.0     0.0
                                                0.0%                 3497 D2.ETDIMIGR   1     0.0     0.0     0.0
                                               13.0%                 3498 D1.ETDIMIGR   1    -9.9    -2.7    10.5
 3583    1  0   1.050     0.0     0.0   229.4     0.0     0.0     0.0
 EMBUGUAC-138   -94.3     0.0     0.0    66.6     0.0     0.0     0.0
                                                2.3%                  583 EMBUGUAC-138  1  -229.4   -66.6   227.5               05
 3739    1  0   1.048     0.0     0.0    29.8     0.0     0.0     0.0
 PARELHEI-138   -94.6     0.0     0.0    12.6     0.0     0.0     0.0
                                                0.3%                  739 PARELHEIY138  1   -29.8   -12.6    30.9               06


TOTAIS DA AREA 28


X--------X--------X--------X--------X--------X--------X--------X--------X
  GERACAO  INJ EQV   CARGA   ELO CC    SHUNT   EXPORT   IMPORT   PERDAS
    MW/      MW/      MW/     MW/     Mvar/     MW/      MW/      MW/
   Mvar     Mvar     Mvar    Mvar     EQUIV    Mvar     Mvar     Mvar
X--------X--------X--------X--------X--------X--------X--------X--------X

      0.0      0.0   7265.9      0.0      0.0      0.0   7268.6      2.7
      0.0      0.0   1988.1      0.0      0.0      0.0   2005.1     17.0
CEPEL - CENTRO DE PESQUISAS DE ENERGIA ELETRICA - PROGRAMA DE ANALISE DE REDES - V08MAR05A                                PAG. 347

ANUAL 06/07 * SETEMBRO 2006 PESADA S/SE 19H N/NE 19H * ANAT0 - FSE - C13
RELATORIO COMPLETO DO SISTEMA * AREA 29 * *           BANDEIRANTE            *

X----------------- D A D O S  -  B A R R A ------------------------X------------ F L U X O S  -  C I R C U I T O S -------------X
 DA BARRA      TENSAO GERACAO INJ EQV  CARGA   ELO CC  SHUNT    MOTOR
 NUM. KV TIPO   MOD/     MW/     MW/     MW/     MW/   Mvar/     MW/
     NOME       ANG     Mvar    Mvar    Mvar    Mvar   EQUIV    Mvar  PARA BARRA                    FLUXOS
                                                FLUXO % SHUNT L         NUM.     NOME     NC     MW    Mvar  MVA/V_d   TAP  DEFAS TIE
X------------X-------X-------X-------X-------X-------X-------X-------X----X------------X--X-------X-------X-------X------X-----X---X

 3045    1  0   1.006     0.0     0.0    26.5     0.0     0.0     0.0
 AER.GUR.-138  -100.1     0.0     0.0    10.4     0.0     0.0     0.0
                                                0.3%                  677 AEROGUA1Y138  1   -26.5   -10.4    28.3               06
 3046  138  0   1.026     0.0     0.0    10.4     0.0     0.0     0.0
 MANUELAP-138   -97.2     0.0     0.0     3.5     0.0     0.0     0.0
                                                0.1%                  676 MANUELAPY138  1   -10.4    -3.5    10.7               06
 3048    1  0   1.047     0.0     0.0     5.7     0.0     0.0     0.0
 PETROM---138   -94.5     0.0     0.0     1.9     0.0     0.0     0.0
                                                0.1%                  708 PETROM-Y-138  1    -5.7    -1.9     5.7               06
 3051    1  0   1.043     0.0     0.0    17.4     0.0     0.0     0.0
 BIRITIBA-138   -95.3     0.0     0.0     5.9     0.0     0.0     0.0
                                                0.2%                  710 BIRITIBAY138  1   -17.4    -5.9    17.6               06
 3054    1  0   1.035     0.0     0.0    13.9     0.0     0.0     0.0
 BOISSUC.-138   -97.4     0.0     0.0     4.4     0.0     0.0     0.0
                                                0.1%                  711 BOISUCANY138  1   -13.9    -4.4    14.1               06
 3057    1  0   0.956     0.0     0.0    28.7     0.0     0.0     0.0
 CARAGUA.--88  -101.9     0.0     0.0     8.7     0.0     0.0     0.0
                                                0.3%                  713 CARAGUAT--88  1   -28.7    -8.7    31.4               06
 3060    1  0   0.991     0.0     0.0     1.5     0.0     0.0     0.0
 JAMBEIRO--88  -102.9     0.0     0.0     0.9     0.0     0.0     0.0
                                                0.0%                  716 JAMBEIROY-88  1    -1.5    -0.9     1.8               06
 3063    1  0   0.990     0.0     0.0     8.1     0.0     0.0     0.0
 EMBRAER---88  -103.3     0.0     0.0     3.2     0.0     0.0     0.0
```

```
                                                  0.1%                  717 EMBRAER-Y-88  1    -8.1    -3.2     8.8               06
 3069    1  0   1.039     0.0     0.0     6.0     0.0     0.0     0.0
 PETRO-RPO138   -97.0     0.0     0.0     1.4     0.0     0.0     0.0
                                                  0.1%                  725 RIOPARDO-138  1    -6.0    -1.4     5.9               06
 3072    1  0   1.044     0.0     0.0     3.2     0.0     0.0     0.0
 SIFAO 22-138   -94.8     0.0     0.0     1.3     0.0     0.0     0.0
                                                  0.0%                  726 SIFAO 22Y138  1    -3.2    -1.3     3.3               06
 3075    1  0   0.982     0.0     0.0    12.0     0.0     0.0     0.0
 SKOL------88  -104.7     0.0     0.0     1.1     0.0     0.0     0.0
                                                  0.1%                  729 SKOL-YE-- 88  1   -12.0    -1.1    12.3               06
 3078    1  0   1.038     0.0     0.0    13.0     0.0     0.0     0.0
 S.SEBAST.138   -97.8     0.0     0.0     5.1     0.0     0.0     0.0
                                                  0.1%                  730 SSEBASTIA138  1   -13.0    -5.1    13.5               06
CEPEL - CENTRO DE PESQUISAS DE ENERGIA ELETRICA - PROGRAMA DE ANALISE DE REDES - V08MAR05A                                PAG. 348

ANUAL 06/07 * SETEMBRO 2006 PESADA S/SE 19H N/NE 19H * ANAT0 - FSE - C13
RELATORIO COMPLETO DO SISTEMA * AREA 29 * *           BANDEIRANTE            *

X----------------- D A D O S  -  B A R R A ------------------------X------------ F L U X O S  -  C I R C U I T O S ------------X
 DA BARRA      TENSAO GERACAO INJ EQV  CARGA   ELO CC  SHUNT    MOTOR
 NUM. KV TIPO   MOD/     MW/     MW/     MW/     MW/   Mvar/     MW/
     NOME       ANG     Mvar    Mvar    Mvar    Mvar   EQUIV    Mvar  PARA BARRA                    FLUXOS
                                                FLUXO % SHUNT L         NUM.     NOME     NC     MW    Mvar  MVA/V_d   TAP  DEFAS TIE
X------------X-------X-------X-------X-------X-------X-------X-------X----X------------X--X-------X-------X-------X------X-----X---X

 3081    1  0   0.997     0.0     0.0     6.6     0.0     0.0     0.0
 CEBRASP---88  -103.7     0.0     0.0     1.9     0.0     0.0     0.0
                                                  0.1%                  731 CEBRASP-Y-88  1    -6.6    -1.9     6.9               06
 3084    1  0   1.039     0.0     0.0    11.4     0.0     0.0     0.0
 GLEBA D--138   -97.0     0.0     0.0     4.6     0.0     0.0     0.0
                                                  0.1%                  725 RIOPARDO-138  1   -11.4    -4.6    11.8               06
 3090    1  0   1.039     0.0     0.0     4.5     0.0     0.0     0.0
 MASSAG.--138   -98.9     0.0     0.0     1.2     0.0     0.0     0.0
                                                  0.0%                 2025 MASAGUACY138  1    -4.5    -1.2     4.5               06
 3437    1  0   0.999     0.0     0.0   254.7     0.0     0.0     0.0
 NORTE-----88   -95.5     0.0     0.0    51.2     0.0     0.0     0.0
                                                  2.6%                  436 NORTE----088  1  -254.7   -51.2   260.0               04
 3444    1  0   1.000     0.0     0.0   506.5     0.0     0.0     0.0
 NORD-BAND-88   -99.3     0.0     0.0   102.2     0.0     0.0     0.0
                                                  5.2%                  443 NORDESTE--88  1  -506.5  -102.2   516.8               04
 3446  230  0   1.015     0.0     0.0    11.2     0.0     0.0     0.0
 MOGI-BAND230   -91.3     0.0     0.0   -10.8     0.0     0.0     0.0
                                                  0.2%                  451 AVillar-Y230  1   -11.2    10.8    15.3               04
 3447    1  0   0.999     0.0     0.0   178.5     0.0     0.0     0.0
 MOGI-BAND-88   -95.0     0.0     0.0    23.4     0.0     0.0     0.0
                                                  1.8%                  447 MOGI-EP---88  1  -178.5   -23.4   180.1               04
 3455    1  0   0.999     0.0     0.0   490.7     0.0     0.0     0.0
 SAO JOSE--88  -103.1     0.0     0.0   129.8     0.0     0.0     0.0
                                                  5.1%                  455 SAO JOSE-088  1  -490.7  -129.8   507.9               04
 3456    1  0   1.018     0.0     0.0   306.2     0.0     0.0     0.0
 TAUBATE--138   -98.3     0.0     0.0    -3.4     0.0     0.0     0.0
                                                  3.0%                  601 TAUBATE--138  1  -306.2     3.4   300.7               05
 3459    1  0   0.978     0.0     0.0    92.1     0.0     0.0     0.0
 APARECIDA-88  -107.8     0.0     0.0    33.1     0.0     0.0     0.0
                                                  1.0%                  459 APARECID-088  1   -92.1   -33.1   100.1               04
 3462    1  0   1.000     0.0     0.0    74.7     0.0     0.0     0.0
 S.CABECA--88  -110.2     0.0     0.0     4.9     0.0     0.0     0.0
                                                  0.7%                  462 S.CABECA--88  1   -74.7    -4.9    74.9               04
CEPEL - CENTRO DE PESQUISAS DE ENERGIA ELETRICA - PROGRAMA DE ANALISE DE REDES - V08MAR05A                                PAG. 349
```

ANUAL 06/07 * SETEMBRO 2006 PESADA S/SE 19H N/NE 19H * ANAT0 - FSE - C13

TOTAIS DA AREA 29

| GERACAO MW/ Mvar | INJ EQV MW/ Mvar | CARGA MW/ Mvar | ELO CC MW/ Mvar | SHUNT Mvar/ EQUIV | EXPORT MW/ Mvar | IMPORT MW/ Mvar | PERDAS MW/ Mvar |
|---|---|---|---|---|---|---|---|
| 0.0 | 0.0 | 2083.5 | 0.0 | 0.0 | 0.0 | 2083.6 | 0.1 |
| 0.0 | 0.0 | 385.9 | 0.0 | 0.0 | 13.3 | 400.3 | 1.1 |





| DADOS - BARRA | | | | | | | | | FLUXOS - CIRCUITOS | | | | | | | | |
|---|---|---|---|---|---|---|---|---|---|---|---|---|---|---|---|---|---|
| DA BARRA NUM. NOME | KV | TIPO | TENSAO MOD/ ANG | GERACAO MW/ Mvar | INJ EQV MW/ Mvar | CARGA MW/ Mvar | ELO CC MW/ Mvar FLUXO % | SHUNT Mvar/ EQUIV SHUNT L | MOTOR MW/ Mvar | PARA BARRA NUM. | NOME | NC | MW | FLUXOS Mvar | MVA/V_d | TAP | DEFAS | TIE |
| 1913 | 1 | 0 | 0.997 | 0.0 | 0.0 | 0.0 | 0.0 | 0.0 | 0.0 | | | | | | | | | |
| CAR-Y-AUX-69 | | | -78.4 | 0.0 | 0.0 | 0.0 | 0.0 | 0.0 | 0.0 | | | | | | | | | |
| | | | | | | | 31.9% | | | 1902 | CARDOSO--69 | 1 | -10.5 | 0.9 | 10.5 | | | 06 |
| | | | | | | | 5.8% | | | 1924 | ACAMPOSY-69 | 1 | 1.8 | -0.6 | 1.9 | | | |
| | | | | | | | 86.9% | | | 3908 | RIOLANDIA | 1 | 8.7 | -0.2 | 8.7 | | | |
| 1924 | 1 | 0 | 0.992 | 0.0 | 0.0 | 0.0 | 0.0 | 0.0 | 0.0 | | | | | | | | | |
| ACAMPOSY-69 | | | -78.7 | 0.0 | 0.0 | 0.0 | 0.0 | 0.0 | 0.0 | | | | | | | | | |
| | | | | | | | 5.6% | | | 1913 | CAR-Y-AUX-69 | 1 | -1.8 | 0.4 | 1.9 | | | |
| | | | | | | | 0.7% | | | 1927 | VOTU-AUX-69 | 1 | 0.0 | -0.2 | 0.2 | | | |
| | | | | | | | 5.5% | | | 3911 | ACAMPOS-69 | 1 | 1.8 | -0.2 | 1.8 | | | |
| 1927 | 1 | 0 | 0.992 | 0.0 | 0.0 | 0.0 | 0.0 | 0.0 | 0.0 | | | | | | | | | |
| VOTU-AUX-69 | | | -78.7 | 0.0 | 0.0 | 0.0 | 0.0 | 0.0 | 0.0 | | | | | | | | | |
| | | | | | | | 0.0% | | | 1924 | ACAMPOSY-69 | 1 | 0.0 | 0.0 | 0.0 | | | |
| 3801 | 1 | 0 | 1.018 | 0.0 | 0.0 | 14.2 | 0.0 | 0.0 | 0.0 | | | | | | | | | |
| AGUAI____138 | | | -95.4 | 0.0 | 0.0 | 2.2 | 0.0 | 0.0 | 0.0 | | | | | | | | | |
| | | | | | | | 0.1% | | | 1926 | AGUAI-1Y-138 | 1 | -14.2 | -2.2 | 14.1 | | | 06 |
| 3802 | 1 | 0 | 0.976 | 0.0 | 0.0 | 29.8 | 0.0 | 0.0 | 0.0 | | | | | | | | | |
| ARARAS_1_138 | | | -98.4 | 0.0 | 0.0 | 1.1 | 0.0 | 0.0 | 0.0 | | | | | | | | | |
| | | | | | | | 0.3% | | | 1931 | ARARA-1-Y138 | 1 | -29.8 | -1.1 | 30.5 | | | 06 |
| 3803 | 1 | 0 | 0.977 | 0.0 | 0.0 | 28.1 | 0.0 | 0.0 | 0.0 | | | | | | | | | |
| ARARAS_2_138 | | | -98.3 | 0.0 | 0.0 | 5.9 | 0.0 | 0.0 | 0.0 | | | | | | | | | |
| | | | | | | | 0.3% | | | 1932 | ARARA-2-Y138 | 1 | -28.1 | -5.9 | 29.4 | | | 06 |
| 3804 | 1 | 0 | 1.009 | 0.0 | 0.0 | 24.5 | 0.0 | 0.0 | 0.0 | | | | | | | | | |
| ARTURNO__138 | | | -96.3 | 0.0 | 0.0 | 3.5 | 0.0 | 0.0 | 0.0 | | | | | | | | | |
| | | | | | | | 0.2% | | | 1933 | ARTURNO-Y138 | 1 | -24.5 | -3.5 | 24.5 | | | 06 |
| 3805 | 1 | 0 | 1.029 | 0.0 | 0.0 | 13.5 | 0.0 | 0.0 | 0.0 | | | | | | | | | |
| CONCHAL__138 | | | -94.5 | 0.0 | 0.0 | 3.2 | 0.0 | 0.0 | 0.0 | | | | | | | | | |
| | | | | | | | 0.1% | | | 1947 | CONCHALY-138 | 1 | -13.5 | -3.2 | 13.5 | | | 06 |
| 3806 | 1 | 0 | 0.992 | 0.0 | 0.0 | 24.8 | 0.0 | 0.0 | 0.0 | | | | | | | | | |
| CORDEIRO_138 | | | -97.2 | 0.0 | 0.0 | 3.6 | 0.0 | 0.0 | 0.0 | | | | | | | | | |
| | | | | | | | 0.3% | | | 1948 | CORDEIRY-138 | 1 | -24.8 | -3.6 | 25.3 | | | 06 |
| 3807 | 1 | 0 | 1.021 | 0.0 | 0.0 | 3.3 | 0.0 | 0.0 | 0.0 | | | | | | | | | |
| SJBV_E___138 | | | -95.0 | 0.0 | 0.0 | 0.3 | 0.0 | 0.0 | 0.0 | | | | | | | | | |

```
                                                  0.0%                 1959 ELFUSA-Y-138  1    -3.3    -0.3     3.2                06
 3808    1  0   0.996     0.0     0.0     9.9     0.0     0.0     0.0
 IRACEMA__138   -97.0     0.0     0.0     1.7     0.0     0.0     0.0
                                                  0.1%                 1963 IRACEMA1Y138  1    -9.9    -1.7    10.1                06
CEPEL - CENTRO DE PESQUISAS DE ENERGIA ELETRICA - PROGRAMA DE ANALISE DE REDES - V08MAR05A                                PAG. 351

ANUAL 06/07 * SETEMBRO 2006 PESADA S/SE 19H N/NE 19H * ANAT0 - FSE - C13
RELATORIO COMPLETO DO SISTEMA * AREA 30 * *             ELEKTRO              *

X----------------- D A D O S  -  B A R R A ------------------------X------------ F L U X O S  -  C I R C U I T O S ------------X
 DA BARRA      TENSAO GERACAO INJ EQV  CARGA   ELO CC  SHUNT    MOTOR
 NUM. KV TIPO   MOD/     MW/     MW/     MW/     MW/   Mvar/     MW/
     NOME       ANG     Mvar    Mvar    Mvar    Mvar   EQUIV    Mvar  PARA BARRA                    FLUXOS
                                                FLUXO % SHUNT L         NUM.     NOME     NC     MW    Mvar  MVA/V_d   TAP  DEFAS TIE
X------------X-------X-------X-------X-------X-------X-------X-------X----X------------X--X-------X-------X-------X------X-----X---X

 3809    1  0   0.977     0.0     0.0    31.2     0.0     0.0     0.0
 LEME_____138   -98.3     0.0     0.0     1.0     0.0     0.0     0.0
                                                  0.3%                 1973 LEME-Y---138  1   -31.2    -1.0    32.0                06
 3810    1  0   1.008     0.0     0.0    38.2     0.0     0.0     0.0
 LIMEIR_1_138   -96.4     0.0     0.0     3.5     0.0     0.0     0.0
                                                  0.4%                  692 LIMEIR-1-138  1   -38.2    -3.5    38.1                06
 3811    1  0   1.008     0.0     0.0     9.5     0.0     0.0     0.0
 LIMEIR_2_138   -96.1     0.0     0.0     1.6     0.0     0.0     0.0
                                                  0.1%                 1976 LIMEIR-2Y138  1    -9.5    -1.6     9.6                06
 3812    1  0   1.010     0.0     0.0    35.3     0.0     0.0     0.0
 LIMEIR_3_138   -96.4     0.0     0.0     3.8     0.0     0.0     0.0
                                                  0.4%                 1977 LIMEIR-3Y138  1   -35.3    -3.8    35.2                06
 3813    1  0   1.007     0.0     0.0    22.8     0.0     0.0     0.0
 LIMEIR_4_138   -96.8     0.0     0.0     6.2     0.0     0.0     0.0
                                                  0.2%                 1978 LIMEIR-4Y138  1   -22.8    -6.2    23.5                06
 3814    1  0   1.008     0.0     0.0    25.5     0.0     0.0     0.0
 LIMEIR_5_138   -96.6     0.0     0.0     2.2     0.0     0.0     0.0
                                                  0.3%                 1954 CUNIAO-1Y138  1   -25.5    -2.2    25.4                06
 3815    1  0   1.019     0.0     0.0    35.5     0.0     0.0     0.0
 MGUACU_M_138   -95.2     0.0     0.0    15.3     0.0     0.0     0.0
                                                 45.2%                 1955 MAHLE-Y--138  1   -35.5   -15.3    37.9                06
 3816    1  0   1.021     0.0     0.0    65.0     0.0     0.0     0.0
 MGUACU_1_138   -95.4     0.0     0.0    16.1     0.0     0.0     0.0
                                                 45.9%                  695 MGUACU---138  1   -65.0   -16.1    65.6                06
 3817    1  0   1.020     0.0     0.0    16.5     0.0     0.0     0.0
 MGUACU_2_138   -95.5     0.0     0.0     2.1     0.0     0.0     0.0
                                                  0.2%                 1982 MGUACU-2Y138  1   -16.5    -2.1    16.3                06
 3818    1  0   1.018     0.0     0.0    32.0     0.0     0.0     0.0
 MMIRIM_1_138   -95.8     0.0     0.0     4.8     0.0     0.0     0.0
                                                  0.3%                 1985 MMIRIM-1Y138  1   -32.0    -4.8    31.8                06
 3819    1  0   1.019     0.0     0.0    18.9     0.0     0.0     0.0
 MMIRIM_2_138   -95.7     0.0     0.0     7.2     0.0     0.0     0.0
                                                  0.2%                  696 MMIRIM-2-138  1   -18.9    -7.2    19.9                06
 3820    1  0   0.984     0.0     0.0    24.6     0.0     0.0     0.0
 PIRASS_1_138   -97.2     0.0     0.0     2.3     0.0     0.0     0.0
                                                  0.3%                 1989 PIRASS-1Y138  1   -24.6    -2.3    25.1                06
CEPEL - CENTRO DE PESQUISAS DE ENERGIA ELETRICA - PROGRAMA DE ANALISE DE REDES - V08MAR05A                                PAG. 352

ANUAL 06/07 * SETEMBRO 2006 PESADA S/SE 19H N/NE 19H * ANAT0 - FSE - C13
RELATORIO COMPLETO DO SISTEMA * AREA 30 * *             ELEKTRO              *

X----------------- D A D O S  -  B A R R A ------------------------X------------ F L U X O S  -  C I R C U I T O S ------------X
 DA BARRA      TENSAO GERACAO INJ EQV  CARGA   ELO CC  SHUNT    MOTOR
 NUM. KV TIPO   MOD/     MW/     MW/     MW/     MW/   Mvar/     MW/
```

```
     NOME       ANG     Mvar    Mvar    Mvar    Mvar   EQUIV    Mvar  PARA BARRA                    FLUXOS
                                               FLUXO % SHUNT L         NUM.     NOME     NC     MW    Mvar  MVA/V_d   TAP  DEFAS TIE
X------------X-------X-------X-------X-------X-------X-------X-------X----X------------X--X-------X-------X-------X------X-----X---X

 3821    1  0   1.001     0.8     0.0     3.7     0.0     0.0     0.0
 PIRASS_2_138   -95.5     0.0     0.0     0.3     0.0     0.0     0.0
                                               0.0%                  1990 PIRASS2YA138  1    -2.9    -0.3     2.9               06
 3822    1  0   0.995     0.0     0.0    23.4     0.0     0.0     0.0
 PFERREIRA138   -95.7     0.0     0.0    -1.1     0.0     0.0     0.0
                                               0.2%                   699 PFERREIRA138  1   -23.4     1.1    23.5               06
 3823    1  0   1.017     0.0     0.0    15.0     0.0     0.0     0.0
 MGUACU_C_138   -95.5     0.0     0.0    13.0     0.0     0.0     0.0
                                               0.2%                  1997 REFINA-Y-138  1   -15.0   -13.0    19.5               06
 3824    1  0   0.988     0.0     0.0    44.5     0.0     0.0     0.0
 RCLARO_1_138   -97.1     0.0     0.0     0.0     0.0     0.0     0.0
                                               0.5%                   701 RCLARO-1-138  1   -44.5     0.0    45.0               06
 3825    1  0   0.974     1.1     0.0    57.1     0.0     0.0     0.0
 RCLARO_2_138   -97.3     0.0     0.0    21.3     0.0     0.0     0.0
                                               0.6%                  1996 RCLARO-2Y138  1   -56.0   -21.3    61.5               06
 3826    1  0   0.985     0.0     0.0    22.8     0.0     0.0     0.0
 RCLARO_3_138   -96.9     0.0     0.0     6.7     0.0     0.0     0.0
                                               0.2%                  2000 RCLARO3-Y138  1   -22.8    -6.7    24.1               06
 3827    1  0   1.021     0.0     0.0    32.2     0.0     0.0     0.0
 SJBVIS_1_138   -95.0     0.0     0.0     3.7     0.0     0.0     0.0
                                               0.3%                  2002 SJBVIS-1Y138  1   -32.2    -3.7    31.8               06
 3828    1  0   1.005     0.0     0.0     7.8     0.0     0.0     0.0
 SCPALMEI_138   -95.3     0.0     0.0    -0.1     0.0     0.0     0.0
                                               0.1%                  2001 SCPALME-Y138  1    -7.8     0.1     7.8               06
 3829    1  0   0.997     0.0     0.0    10.0     0.0     0.0     0.0
 SRPASSA4_138   -95.3     0.0     0.0     1.4     0.0     0.0     0.0
                                               0.1%                  2004 SRPASS4YA138  1   -10.0    -1.4    10.1               06
 3830    1  0   0.950     0.0     0.0     6.5     0.0     0.0     0.0
 SAPOSSE__138  -102.5     0.0     0.0     0.5     0.0     0.0     0.0
                                               0.1%                  1999 SAPOSSE1Y138  1    -6.5    -0.5     6.9               06
 3831    1  0   0.996     0.0     0.0    11.6     0.0     0.0     0.0
 TAMBAU___138   -95.6     0.0     0.0    -0.6     0.0     0.0     0.0
                                               0.1%                  2004 SRPASS4YA138  1   -11.6     0.6    11.7               06
 3832    1  0   1.021     0.0     0.0    13.7     0.0     0.0     0.0
 VGSUL____138   -94.8     0.0     0.0     1.8     0.0     0.0     0.0
                                               0.1%                  2010 VGSUL-Y--138  1   -13.7    -1.8    13.5               06
```



ANUAL 06/07 * SETEMBRO 2006 PESADA S/SE 19H N/NE 19H * ANAT0 - FSE - C13
RELATORIO COMPLETO DO SISTEMA * AREA 30 * * ELEKTRO *

```
X----------------- D A D O S  -  B A R R A ------------------------X------------ F L U X O S  -  C I R C U I T O S ------------X
 DA BARRA      TENSAO GERACAO INJ EQV  CARGA   ELO CC  SHUNT    MOTOR
 NUM. KV TIPO   MOD/     MW/     MW/     MW/     MW/   Mvar/     MW/
     NOME       ANG     Mvar    Mvar    Mvar    Mvar   EQUIV    Mvar  PARA BARRA                    FLUXOS
                                               FLUXO % SHUNT L         NUM.     NOME     NC     MW    Mvar  MVA/V_d   TAP  DEFAS TIE
X------------X-------X-------X-------X-------X-------X-------X-------X----X------------X--X-------X-------X-------X------X-----X---X

 3833    1  0   1.023     0.0     0.0     3.4     0.0     0.0     0.0
 ECOELH_V_138   -95.1     0.0     0.0     1.1     0.0     0.0     0.0
                                               0.0%                  1962 MVARGA-Y-138  1    -3.4    -1.1     3.5               06
 3834    1  0   1.007     0.0     0.0    20.5     0.0     0.0     0.0
 LIMEIR_A_138   -96.2     0.0     0.0     7.1     0.0     0.0     0.0
                                               0.2%                  1976 LIMEIR-2Y138  1   -20.5    -7.1    21.6               06
 3835    1  0   1.009     0.0     0.0    38.0     0.0     0.0     0.0
 LIMEIR_R_138   -96.0     0.0     0.0    14.8     0.0     0.0     0.0
```

```
                                                  0.4%                 1998 RIPASA-Y-138  1   -38.0   -14.8    40.4                06
 3836    1  0   0.990     0.0     0.0     0.1     0.0     0.0     0.0
 PIRASS_P_138   -96.3     0.0     0.0     0.1     0.0     0.0     0.0
                                                  0.0%                 1949 PETROBRAY138  1    -0.1    -0.1     0.1                06
 3838  138  0   0.977     0.0     0.0     0.0     0.0     0.0     0.0
 CRESCIUM_138   -98.4     0.0     0.0     0.0     0.0     0.0     0.0
                                                  0.0%                 1974 CRESCIUY-138  1     0.0     0.0     0.0                06
 3841    1  0   1.021     0.0     0.0    27.9     0.0     0.0     0.0
 ARUJA____138   -98.0     0.0     0.0     2.6     0.0     0.0     0.0
                                                  0.3%                 1934 ARUJA-Y--138  1   -27.9    -2.6    27.5                06
 3842    1  0   0.988     0.0     0.0    42.0     0.0     0.0     0.0
 ATIBAIA__138  -103.0     0.0     0.0     4.7     0.0     0.0     0.0
                                                 50.9%                 1937 BOMJESU-Y138  1   -42.0    -4.7    42.8                06
                                                  0.0%                 3843 ATIBAIA2_138  1     0.0     0.0     0.0
 3843    1  0   0.988     0.0     0.0     0.0     0.0     0.0     0.0
 ATIBAIA2_138  -103.0     0.0     0.0     0.0     0.0     0.0     0.0
                                                  0.0%                 3842 ATIBAIA__138  1     0.0     0.0     0.0
 3844    1  0   1.039     0.0     0.0    11.1     0.0     0.0     0.0
 BERTIO_1_138   -95.4     0.0     0.0     0.0     0.0     0.0     0.0
                                                  0.1%                 2011 BERTIO-1Y138  1   -11.1     0.0    10.7                06
 3845    1  0   1.040     0.0     0.0     6.1     0.0     0.0     0.0
 BERTIO_2_138   -95.4     0.0     0.0    -1.7     0.0     0.0     0.0
                                                  0.1%                  709 BERTIO-2-138  1    -6.1     1.7     6.1                06
 3846    1  0   1.039     0.0     0.0     3.1     0.0     0.0     0.0
 BERTIO_3_138   -95.9     0.0     0.0     1.5     0.0     0.0     0.0
                                                  0.0%                 2012 GUARATUBY138  1    -3.1    -1.5     3.3                06
 3847    1  0   0.986     0.0     0.0    23.8     0.0     0.0     0.0
 BJPERDOES138  -103.2     0.0     0.0     1.1     0.0     0.0     0.0
                                                 28.8%                 1937 BOMJESU-Y138  1   -23.8    -1.1    24.2                06
CEPEL - CENTRO DE PESQUISAS DE ENERGIA ELETRICA - PROGRAMA DE ANALISE DE REDES - V08MAR05A                                  PAG. 354

ANUAL 06/07 * SETEMBRO 2006 PESADA S/SE 19H N/NE 19H * ANAT0 - FSE - C13
RELATORIO COMPLETO DO SISTEMA * AREA 30 * *             ELEKTRO              *

X----------------- D A D O S  -  B A R R A ------------------------X------------ F L U X O S  -  C I R C U I T O S ------------X
 DA BARRA      TENSAO GERACAO INJ EQV  CARGA   ELO CC  SHUNT    MOTOR
 NUM. KV TIPO   MOD/     MW/     MW/     MW/     MW/   Mvar/     MW/
     NOME       ANG     Mvar    Mvar    Mvar    Mvar   EQUIV    Mvar  PARA BARRA                    FLUXOS
                                                FLUXO % SHUNT L         NUM.     NOME     NC     MW    Mvar  MVA/V_d   TAP  DEFAS TIE
X------------X-------X-------X-------X-------X-------X-------X-------X----X------------X--X-------X-------X-------X------X-----X---X

 3848    1  0   1.050     0.0     0.0    11.8     0.0     0.0     0.0
 CABREUVA_138   -98.7     0.0     0.0     1.9     0.0     0.0     0.0
                                                  0.1%                  591 CABREUVA-138  1   -11.8    -1.9    11.4                05
 3849    1  0   1.004     0.0     0.0    17.3     0.0     0.0     0.0
 CAIEIRAS_138  -102.1     0.0     0.0     2.1     0.0     0.0     0.0
                                                  6.8%                 3865 STA_INES_138  1    -8.6    -1.0     8.7
                                                  6.8%                 3865 STA_INES_138  2    -8.6    -1.0     8.7
 3850    1  0   1.013     0.0     0.0    25.4     0.0     0.0     0.0
 CJORDAO__138   -99.1     0.0     0.0     1.7     0.0     0.0     0.0
                                                  6.6%                  601 TAUBATE--138  1   -12.7    -0.8    12.6                05
                                                 14.3%                  601 TAUBATE--138  2   -12.7    -0.8    12.6                05
 3851    1  0   1.003     0.0     0.0    42.8     0.0     0.0     0.0
 FMORATO__138  -102.4     0.0     0.0     4.7     0.0     0.0     0.0
                                                  0.4%                 1960 FMORATO1Y138  1   -42.8    -4.7    42.9                06
                                                  0.0%                 3873 FROCHA_2_138  1     0.0     0.0     0.0
 3852    1  0   1.004     0.0     0.0    39.1     0.0     0.0     0.0
 FROCHA___138  -102.3     0.0     0.0     3.0     0.0     0.0     0.0
                                                  0.4%                 1961 FROCHA-Y-138  1   -39.1    -3.0    39.0                06
 3853    1  0   1.030     0.0     0.0    38.1     0.0     0.0     0.0
```

```
 GUARUJA1_138   -95.6     0.0     0.0    11.0     0.0     0.0     0.0
                                                0.4%                 2014 GUARUJ-1Y138  1   -38.1   -11.0    38.5               06
 3854    1  0   1.030     0.0     0.0    21.3     0.0     0.0     0.0
 GUARUJA2_138   -95.7     0.0     0.0     2.9     0.0     0.0     0.0
                                                0.2%                 2015 GUARUJ-2Y138  1   -21.3    -2.5    20.8               06
                                                0.3%                 3872 GUARUJA4_138  1     0.0    -0.4     0.4
 3855    1  0   1.030     0.0     0.0    15.3     0.0     0.0     0.0
 GUARUJA3_138   -95.6     0.0     0.0     3.2     0.0     0.0     0.0
                                                0.2%                 2016 GUARUJ-3Y138  1   -15.3    -3.2    15.2               06
 3856    1  0   0.980     0.0     0.0    14.8     0.0     0.0     0.0
 SISABEL__138  -104.9     0.0     0.0     1.8     0.0     0.0     0.0
                                                0.2%                 2022 SISABEL-Y-88  1   -14.8    -1.8    15.2               06
 3857    1  0   1.038     0.0     0.0     8.1     0.0     0.0     0.0
 ILHABELA_138   -97.8     0.0     0.0     1.8     0.0     0.0     0.0
                                                0.1%                  730 SSEBASTIA138  1    -8.1    -1.8     8.0               06
 3858    1  0   1.014     0.0     0.0    11.3     0.0     0.0     0.0
 JARINU___138  -100.8     0.0     0.0     0.1     0.0     0.0     0.0
                                                0.1%                 1972 JARINU-Y-138  1   -11.3    -0.1    11.1               06
CEPEL - CENTRO DE PESQUISAS DE ENERGIA ELETRICA - PROGRAMA DE ANALISE DE REDES - V08MAR05A                              PAG. 355

ANUAL 06/07 * SETEMBRO 2006 PESADA S/SE 19H N/NE 19H * ANAT0 - FSE - C13
RELATORIO COMPLETO DO SISTEMA * AREA 30 * *             ELEKTRO             *

X----------------- D A D O S  -  B A R R A -------------------------X------------ F L U X O S  -  C I R C U I T O S ------------X
 DA BARRA      TENSAO GERACAO INJ EQV  CARGA   ELO CC  SHUNT    MOTOR
 NUM. KV TIPO   MOD/     MW/     MW/     MW/     MW/   Mvar/     MW/
     NOME       ANG     Mvar    Mvar    Mvar    Mvar   EQUIV    Mvar  PARA BARRA                   FLUXOS
                                                FLUXO % SHUNT L         NUM.     NOME     NC     MW    Mvar  MVA/V_d   TAP  DEFAS TIE
X------------X-------X-------X-------X-------X-------X-------X-------X----X------------X--X-------X-------X-------X------X-----X---X

 3859    1  0   0.982     0.0     0.0     5.4     0.0     0.0     0.0
 SISABE_K_138  -104.6     0.0     0.0     1.7     0.0     0.0     0.0
                                                0.1%                 2017 KARIBE-Y--88  1    -5.4    -1.7     5.8               06
 3860    1  0   1.004     0.0     0.0    13.5     0.0     0.0     0.0
 CAIEIR_N_138  -102.3     0.0     0.0     4.3     0.0     0.0     0.0
                                                0.1%                 3874 CAIEIR-Y-138  1   -13.5    -4.3    14.1
 3861    1  0   1.008     0.0     0.0    24.3     0.0     0.0     0.0
 MAIRIPORA138  -101.4     0.0     0.0     2.3     0.0     0.0     0.0
                                                0.2%                  694 MAIRIPORA138  1   -24.3    -2.3    24.2               06
 3862    1  0   1.004     0.0     0.0    13.5     0.0     0.0     0.0
 CAIEIR_M_138  -102.3     0.0     0.0     5.7     0.0     0.0     0.0
                                                0.1%                 3874 CAIEIR-Y-138  1   -13.5    -5.7    14.6
 3863    1  0   0.994     0.0     0.0     7.1     0.0     0.0     0.0
 PARAIBUNA138  -102.2     0.0     0.0     0.1     0.0     0.0     0.0
                                                0.1%                  724 PARAIBUNA-88  1    -7.1    -0.1     7.1               06
 3864    1  0   1.039     0.0     0.0     0.1     0.0     0.0     0.0
 GUARATUBA138   -95.9     0.0     0.0     0.0     0.0     0.0     0.0
                                                0.0%                 2012 GUARATUBY138  1    -0.1     0.0     0.1               06
 3865    1  0   1.005     0.0     0.0    45.8     0.0     0.0     0.0
 STA_INES_138  -102.0     0.0     0.0     0.0     0.0     0.0     0.0
                                               43.6%                  694 MAIRIPORA138  1   -31.6    -0.8    31.4               06
                                               43.6%                  694 MAIRIPORA138  2   -31.6    -0.8    31.4               06
                                                6.8%                 3849 CAIEIRAS_138  1     8.7     0.8     8.7
                                                6.8%                 3849 CAIEIRAS_138  2     8.7     0.8     8.7
 3866    1  0   1.038     0.0     0.0    20.5     0.0     0.0     0.0
 UBATUBA1_138   -99.4     0.0     0.0    -0.5     0.0     0.0     0.0
                                                0.2%                 2018 UBATUBA1-138  1   -20.5     0.5    19.8               06
 3867    1  0   1.038     0.0     0.0     5.4     0.0     0.0     0.0
 UBATUBA2_138   -99.2     0.0     0.0    -0.6     0.0     0.0     0.0
                                                0.1%                 2019 UBATUBA2-138  1    -5.4     0.6     5.2               06
```

```
 3868    1  0   0.989     0.0     0.0     3.2     0.0     0.0     0.0
 IGARATA__138  -104.2     0.0     0.0     0.3     0.0     0.0     0.0
                                                0.0%                 2021 IGARAT-Y-138  1    -3.2    -0.3     3.2              06
 3869    1  0   1.031     0.0     0.0     5.3     0.0     0.0     0.0
 GUARUJ_D_138   -95.5     0.0     0.0     1.1     0.0     0.0     0.0
                                                0.1%                 2013 DOWQUIM-Y138  1    -5.3    -1.1     5.3              06
CEPEL - CENTRO DE PESQUISAS DE ENERGIA ELETRICA - PROGRAMA DE ANALISE DE REDES - V08MAR05A                                PAG. 356

ANUAL 06/07 * SETEMBRO 2006 PESADA S/SE 19H N/NE 19H * ANAT0 - FSE - C13
RELATORIO COMPLETO DO SISTEMA * AREA 30 * *             ELEKTRO             *

X----------------- D A D O S  -  B A R R A ------------------------X------------ F L U X O S  -  C I R C U I T O S ------------X
 DA BARRA      TENSAO GERACAO INJ EQV  CARGA   ELO CC  SHUNT    MOTOR
 NUM. KV TIPO   MOD/     MW/     MW/     MW/     MW/   Mvar/     MW/
     NOME       ANG     Mvar    Mvar    Mvar    Mvar   EQUIV    Mvar  PARA BARRA                    FLUXOS
                                                FLUXO % SHUNT L        NUM.     NOME     NC     MW    Mvar  MVA/V_d   TAP  DEFAS TIE
X------------X-------X-------X-------X-------X-------X-------X-------X----X------------X--X-------X-------X-------X------X-----X---X

 3870    1  0   0.991     0.0     0.0     7.0     0.0     0.0     0.0
 JARINU_C_138  -102.4     0.0     0.0     4.5     0.0     0.0     0.0
                                                0.1%                 1950 CRUZACO1Y138  1    -7.0    -4.5     8.4              06
 3871    1  0   1.048     0.0     0.0    11.8     0.0     0.0     0.0
 CABREU_2_138   -98.9     0.0     0.0     1.9     0.0     0.0     0.0
                                                9.0%                  591 CABREUVA-138  1   -11.8    -1.9    11.4              05
 3872    1  0   1.030     0.0     0.0     0.0     0.0     0.0     0.0
 GUARUJA4_138   -95.7     0.0     0.0     0.0     0.0     0.0     0.0
                                                0.0%                 3854 GUARUJA2_138  1     0.0     0.0     0.0
 3873    1  0   1.003     0.0     0.0     0.0     0.0     0.0     0.0
 FROCHA_2_138  -102.4     0.0     0.0     0.0     0.0     0.0     0.0
                                                0.0%                 3851 FMORATO__138  1     0.0     0.0     0.0
 3874    1  0   1.004     0.0     0.0     0.0     0.0     0.0     0.0
 CAIEIR-Y-138  -102.3     0.0     0.0     0.0     0.0     0.0     0.0
                                               28.6%                 1981 MELHORA-Y138  1   -27.0    -9.9    28.6              06
                                                0.1%                 3860 CAIEIR_N_138  1    13.5     4.2    14.1
                                                0.1%                 3862 CAIEIR_M_138  1    13.5     5.7    14.6
 3876    1  0   1.002     0.0     0.0     8.2     0.0     0.0     0.0
 TPAULISTA-69   -71.7     0.0     0.0     2.2     0.0     0.0     0.0
                                               45.4%                 1912 DRACENA--69   1   -14.6    -3.6    15.0              06
                                               19.8%                 3877 PANORAMA-69   1     6.4     1.4     6.5
 3877    1  0   0.982     0.0     0.0     6.3     0.0     0.0     0.0
 PANORAMA-69    -72.8     0.0     0.0     1.7     0.0     0.0     0.0
                                               20.1%                 3876 TPAULISTA-69  1    -6.3    -1.7     6.6
 3878    1  0   0.947     0.0     0.0    12.7     0.0     0.0     0.0
 STAFESUL-69    -78.4     0.0     0.0     2.9     0.0     0.0     0.0
                                               62.5%                 1928 JALES-69      1   -12.7    -2.9    13.8              06
 3879    1  0   1.003     0.0     0.0     3.0     0.0     0.0     0.0
 POPULINA       -77.3     0.0     0.0     0.9     0.0     0.0     0.0
                                               24.4%                 1928 JALES-69      1    -7.8    -1.9     8.1              06
                                               15.0%                 3880 INDIAPORA     1     4.8     1.0     4.9
 3880    1  0   0.990     0.0     0.0     4.8     0.0     0.0     0.0
 INDIAPORA      -78.0     0.0     0.0     1.4     0.0     0.0     0.0
                                               15.3%                 3879 POPULINA      1    -4.8    -1.4     5.1
 3881    1  0   1.050     0.0     0.0     1.9     0.0     0.0     0.0
 A_VERMELH138   -72.2     0.0     0.0     0.3     0.0     0.0     0.0
                                                0.0%                  537 AVERMELH-138  1    -1.9    -0.3     1.8              05
CEPEL - CENTRO DE PESQUISAS DE ENERGIA ELETRICA - PROGRAMA DE ANALISE DE REDES - V08MAR05A                                PAG. 357

ANUAL 06/07 * SETEMBRO 2006 PESADA S/SE 19H N/NE 19H * ANAT0 - FSE - C13
RELATORIO COMPLETO DO SISTEMA * AREA 30 * *             ELEKTRO             *
```

```
X----------------- D A D O S  -  B A R R A -------------------------X------------ F L U X O S  -  C I R C U I T O S ------------X
 DA BARRA      TENSAO GERACAO INJ EQV  CARGA   ELO CC  SHUNT    MOTOR
 NUM. KV TIPO   MOD/     MW/     MW/     MW/     MW/   Mvar/     MW/
     NOME       ANG     Mvar    Mvar    Mvar    Mvar   EQUIV    Mvar  PARA BARRA                    FLUXOS
                                                FLUXO % SHUNT L         NUM.     NOME     NC     MW    Mvar  MVA/V_d   TAP  DEFAS TIE
X------------X-------X-------X-------X-------X-------X-------X-------X----X------------X--X-------X-------X-------X------X-----X---X

 3882    1  0   1.012     0.0     0.0    20.7     0.0     0.0     0.0
 ANDRADI__138   -66.2     0.0     0.0     4.4     0.0     0.0     0.0
                                                0.2%                    1900 ANDRAD-Y-138  1   -20.7    -4.4    20.9               06
 3883    1  0   1.029     0.0     0.0     5.3     0.0     0.0     0.0
 N_AVANHA_138   -71.7     0.0     0.0     0.9     0.0     0.0     0.0
                                                0.1%                     652 NAVANHAN-138  1    -5.3    -0.9     5.2               06
 3884    1  0   1.040     0.0     0.0     0.5     0.0     0.0     0.0
 CAPIVARA_138   -63.9     0.0     0.0     0.1     0.0     0.0     0.0
                                                0.0%                     550 CAPIVARA-138  1    -0.5    -0.1     0.5               05
 3885    1  0   1.035    10.0     0.0     3.6     0.0     0.0     0.0
 CARDO_138_69   -75.1     0.0     0.0     0.5     0.0     0.0     0.0
                                                0.1%                    1904 CARDOSO--138  1     6.4    -0.5     6.2               06
 3886    1  0   1.040     0.0     0.0     3.5     0.0     0.0     0.0
 CASTILHO_138   -62.9     0.0     0.0     0.5     0.0     0.0     0.0
                                                0.0%                    1907 CASTILHOY138  1    -3.5    -0.5     3.4               06
 3887    1  0   0.978     0.0     0.0    16.8     0.0     0.0     0.0
 DRACENA__138   -67.8     0.0     0.0     0.7     0.0     0.0     0.0
                                                0.2%                     639 DRACENA--138  1   -16.8    -0.7    17.2               06
 3888    1  0   1.026     0.0     0.0    26.9     0.0     0.0     0.0
 FERNANDO_138   -75.3     0.0     0.0     0.5     0.0     0.0     0.0
                                                0.3%                    1906 FERNAND-Y138  1   -26.9    -0.5    26.2               06
 3889    1  0   0.975     0.0     0.0     8.7     0.0     0.0     0.0
 FLORIDAP_138   -69.1     0.0     0.0     2.3     0.0     0.0     0.0
                                                0.1%                     640 FLORIDA--138  1    -8.7    -2.3     9.2               06
 3890    1  0   1.036     0.0     0.0    11.1     0.0     0.0     0.0
 I_SOLTEI_138   -66.6     0.0     0.0     2.9     0.0     0.0     0.0
                                                0.1%                     647 ISOLTEIRA138  1   -11.1    -2.9    11.1               06
 3891    1  0   1.032     0.0     0.0    19.5     0.0     0.0     0.0
 JALES_138_69   -73.4     0.0     0.0     0.0     0.0     0.0     0.0
                                                0.2%                     649 JALES----138  1   -19.5     0.0    18.9               06
 3892    1  0   1.040     0.0     0.0    16.1     0.0     0.0     0.0
 JUPIA____138   -62.9     0.0     0.0     3.7     0.0     0.0     0.0
                                                0.2%                     541 JUPIA----138  1   -16.1    -3.7    15.9               05
 3893    1  0   0.995     0.0     0.0    11.6     0.0     0.0     0.0
 MIRANDOP_138   -68.4     0.0     0.0     2.5     0.0     0.0     0.0
                                                0.1%                    1908 MIRANDO-Y138  1   -11.6    -2.5    11.9               06
```





```
X----------------- D A D O S  -  B A R R A -------------------------X------------ F L U X O S  -  C I R C U I T O S ------------X
 DA BARRA      TENSAO GERACAO INJ EQV  CARGA   ELO CC  SHUNT    MOTOR
 NUM. KV TIPO   MOD/     MW/     MW/     MW/     MW/   Mvar/     MW/
     NOME       ANG     Mvar    Mvar    Mvar    Mvar   EQUIV    Mvar  PARA BARRA                    FLUXOS
                                                FLUXO % SHUNT L         NUM.     NOME     NC     MW    Mvar  MVA/V_d   TAP  DEFAS TIE
X------------X-------X-------X-------X-------X-------X-------X-------X----X------------X--X-------X-------X-------X------X-----X---X

 3894    1  0   1.031     0.0     0.0     7.1     0.0     0.0     0.0
 P_DOESTE_138   -71.1     0.0     0.0     1.3     0.0     0.0     0.0
                                                0.1%                    1910 PDOESTE-Y138  1    -7.1    -1.3     7.0               06
 3895    1  0   1.031     0.0     0.0     8.1     0.0     0.0     0.0
 PBARRETO_138   -69.5     0.0     0.0     1.3     0.0     0.0     0.0
```

```
                                                  0.1%                 1909 PBARRE-Y-138  1    -8.1    -1.3     8.0                06
 3896    1  0   1.003     0.0     0.0    19.1     0.0     0.0     0.0
 PIRAPOZI_138   -66.3     0.0     0.0     5.6     0.0     0.0     0.0
                                                  0.2%                 1911 PIRAPO-1Y138  1   -19.1    -5.6    19.8                06
 3897    1  0   1.045     0.0     0.0    10.1     0.0     0.0     0.0
 P_PRIMAVE138   -59.5     0.0     0.0     3.2     0.0     0.0     0.0
                                                  0.1%                  658 PPRIMA-B-138  1   -10.1    -3.2    10.1                06
 3898    1  0   1.047     0.0     0.0     0.4     0.0     0.0     0.0
 ROSANA___138   -59.3     0.0     0.0     0.4     0.0     0.0     0.0
                                                  0.0%                  546 ROSANA---138  1    -0.4    -0.4     0.5                05
 3899    1  0   1.040     0.0     0.0     4.5     0.0     0.0     0.0
 TAQUARUC_138   -58.1     0.0     0.0     1.6     0.0     0.0     0.0
                                                  0.0%                  548 TAQUARUC-138  1    -4.5    -1.6     4.6                05
 3900    1  0   1.045     0.0     0.0     1.1     0.0     0.0     0.0
 3IRMAOS__138   -62.6     0.0     0.0     0.4     0.0     0.0     0.0
                                                  0.0%                  543 3IRMAOS--138  1    -1.1    -0.4     1.1                05
 3901    1  0   1.032     0.0     0.0    33.6     0.0     0.0     0.0
 T_LAGOAS_138   -64.0     0.0     0.0    10.3     0.0     0.0     0.0
                                                 40.6%                 1903 3LAGOAS-Y138  1   -33.6   -10.3    34.1                06
 3902    1  0   1.020     0.0     0.0    25.3     0.0     0.0     0.0
 UBARANA_69     -81.8     0.0     0.0     0.0     0.0     0.0     0.0
                                             SUP 103.3%                  672 UBARANA---69  1   -25.3     0.0    24.8                06
 3903    1  0   1.022     0.0     0.0    31.8     0.0     0.0     0.0
 VOTUP_138_69   -76.8     0.0     0.0     1.8     0.0     0.0     0.0
                                                  0.3%                 1917 VOTUPO-1Y138  1   -31.8    -1.8    31.2                06
 3904  138  0   1.032     0.0     0.0     0.0     0.0     0.0     0.0
 PIONEIRO_138   -70.1     0.0     0.0     0.0     0.0     0.0     0.0
                                                  0.0%                  648 PIONEIRY-138  1     0.0     0.0     0.0                06
 3908    1  0   0.977     0.0     0.0     2.3     0.0     0.0     0.0
 RIOLANDIA      -80.2     0.0     0.0     0.1     0.0     0.0     0.0
                                                 86.8%                 1913 CAR-Y-AUX-69  1    -8.5     0.0     8.7
                                                 19.2%                 3909 PAULO FARIA   1     6.2    -0.1     6.3
CEPEL - CENTRO DE PESQUISAS DE ENERGIA ELETRICA - PROGRAMA DE ANALISE DE REDES - V08MAR05A                                PAG. 359

ANUAL 06/07 * SETEMBRO 2006 PESADA S/SE 19H N/NE 19H * ANAT0 - FSE - C13
RELATORIO COMPLETO DO SISTEMA * AREA 30 * *             ELEKTRO              *

X------------------ D A D O S  -  B A R R A -------------------------X------------- F L U X O S  -  C I R C U I T O S -------------X
 DA BARRA      TENSAO GERACAO INJ EQV  CARGA   ELO CC  SHUNT    MOTOR
 NUM. KV TIPO   MOD/     MW/     MW/     MW/     MW/   Mvar/     MW/
     NOME       ANG     Mvar    Mvar    Mvar    Mvar   EQUIV    Mvar  PARA BARRA                    FLUXOS
                                                FLUXO % SHUNT L         NUM.     NOME     NC     MW    Mvar  MVA/V_d   TAP  DEFAS TIE
X------------X-------X-------X-------X-------X-------X-------X-------X----X------------X--X-------X-------X-------X------X-----X---X

 3909    1  0   0.964     0.0     0.0     6.1     0.0     0.0     0.0
 PAULO FARIA    -81.4     0.0     0.0     0.2     0.0     0.0     0.0
                                                 19.2%                 3908 RIOLANDIA     1    -6.1    -0.2     6.3
 3911    1  0   0.989     0.0     0.0     1.8     0.0     0.0     0.0
 ACAMPOS-69     -78.9     0.0     0.0     0.1     0.0     0.0     0.0
                                                  5.5%                 1924 ACAMPOSY-69   1    -1.8    -0.1     1.8
 3916    1  0   1.037     0.0     0.0    15.6     0.0     0.0     0.0
 ANGATUBA_138   -99.1     0.0     0.0     2.4     0.0     0.0     0.0
                                                  7.9%                  741 ITAPETI2-138  1    -7.8    -1.2     7.6                06
                                                  0.1%                  741 ITAPETI2-138  2    -7.8    -1.2     7.6                06
 3917    1  0   1.033     0.0     0.0     5.5     0.0     0.0     0.0
 BURI_____138   -93.4     0.0     0.0     0.1     0.0     0.0     0.0
                                                  0.1%                 2024 BURI-Y---138  1    -5.5    -0.1     5.3                06
 3918    1  0   1.047     0.0     0.0    37.6     0.0     0.0     0.0
 C_BONITO_138   -97.1     0.0     0.0     3.1     0.0     0.0     0.0
                                                  0.4%                  624 CBONITO--138  1   -37.6    -3.1    36.0                05
```

```
 3919    1  0   1.021     0.8     0.0    16.1     0.0     0.0     0.0
 CERQUILHO138   -91.7     0.0     0.0     2.2     0.0     0.0     0.0
                                              32.9%                 3921 CONCHAS__138  1   -15.3    -2.2    15.1
 3920    1  0   1.034     0.0     0.0     7.8     0.0     0.0     0.0
 CESARIO__138   -97.6     0.0     0.0     1.0     0.0     0.0     0.0
                                               9.1%                 2033 CESARIO-Y138  1    -7.8    -1.0     7.6               06
 3921    1  0   1.049     0.0     0.0    13.0     0.0     0.0     0.0
 CONCHAS__138   -90.0     0.0     0.0     3.3     0.0     0.0     0.0
                                              60.3%                 2040 BOTUCATU--88  1   -28.6    -5.1    27.7               06
                                              32.6%                 3919 CERQUILHO138  1    15.6     1.8    15.0
 3922    1  0   1.035     0.0     0.0     0.7     0.0     0.0     0.0
 ITAPEV_M_138   -99.5     0.0     0.0     0.3     0.0     0.0     0.0
                                               0.0%                  628 CIMENTMAR138  1    -0.7    -0.3     0.7               06
 3923    1  0   1.052     0.0     0.0    24.8     0.0     0.0     0.0
 ITANHAEM_138  -100.9     0.0     0.0     4.4     0.0     0.0     0.0
                                               0.2%                 2029 ITANHA-Y-138  1   -24.8    -4.4    23.9               06
 3924    1  0   1.036     0.0     0.0    33.2     0.0     0.0     0.0
 ITAPEV138_69   -99.4     0.0     0.0     0.0     0.0     0.0     0.0
                                               0.3%                  622 ITAPEVA--138  1   -33.2     0.0    32.1               06
CEPEL - CENTRO DE PESQUISAS DE ENERGIA ELETRICA - PROGRAMA DE ANALISE DE REDES - V08MAR05A                              PAG. 360

ANUAL 06/07 * SETEMBRO 2006 PESADA S/SE 19H N/NE 19H * ANAT0 - FSE - C13
RELATORIO COMPLETO DO SISTEMA * AREA 30 * *             ELEKTRO             *

X----------------- D A D O S  -  B A R R A ------------------------X------------ F L U X O S  -  C I R C U I T O S ------------X
 DA BARRA      TENSAO GERACAO INJ EQV  CARGA   ELO CC  SHUNT    MOTOR
 NUM. KV TIPO   MOD/     MW/     MW/     MW/     MW/   Mvar/     MW/
     NOME       ANG     Mvar    Mvar    Mvar    Mvar   EQUIV    Mvar  PARA BARRA                    FLUXOS
                                                FLUXO % SHUNT L         NUM.     NOME     NC     MW    Mvar  MVA/V_d   TAP  DEFAS TIE
X------------X-------X-------X-------X-------X-------X-------X-------X----X------------X--X-------X-------X-------X------X-----X---X

 3925    1  0   1.051     0.0     0.0     4.8     0.0     0.0     0.0
 JUQUIA___138  -101.5     0.0     0.0     2.0     0.0     0.0     0.0
                                               0.0%                 2030 JUQUIA-Y-138  1    -4.8    -2.0     4.9               06
 3926    1  0   1.032     0.0     0.0    11.5     0.0     0.0     0.0
 LPAULISTA138   -95.4     0.0     0.0     2.0     0.0     0.0     0.0
                                               0.1%                 2032 LARANJA1Y138  1   -11.5    -2.0    11.3               06
 3927    1  0   1.053     0.0     0.0    13.5     0.0     0.0     0.0
 MONGAGUA_138   -97.2     0.0     0.0     3.0     0.0     0.0     0.0
                                              13.7%                  744 MONGAGU-Y138  1   -13.5    -3.0    13.1               06
 3928    1  0   1.054     0.0     0.0    25.0     0.0     0.0     0.0
 PERUIBE__138  -100.8     0.0     0.0     6.4     0.0     0.0     0.0
                                               0.2%                  746 PERUIBE--138  1   -25.0    -6.4    24.5               06
 3929    1  0   0.977     0.0     0.0    12.0     0.0     0.0     0.0
 TATUI_1__138  -101.4     0.0     0.0     0.0     0.0     0.0     0.0
                                              33.2%                  745 M.ALTO FEPAS  1   -12.0     0.0    12.3               06
 3930    1  0   1.032     0.0     0.0    24.5     0.0     0.0     0.0
 TATUI_2__138   -98.3     0.0     0.0     2.4     0.0     0.0     0.0
                                               0.2%                 2044 TATUI-2Y-138  1   -24.5    -2.4    23.8               06
 3931    1  0   1.040     0.0     0.0    18.1     0.0     0.0     0.0
 TIETE____138   -96.4     0.0     0.0     3.6     0.0     0.0     0.0
                                               0.2%                  748 TIETE----138  1   -18.1    -3.6    17.7               06
 3932    1  0   1.052     0.0     0.0    42.6     0.0     0.0     0.0
 REGIS_138_69  -101.4     0.0     0.0     2.5     0.0     0.0     0.0
                                               0.4%                  747 REGISTRO-138  1   -42.6    -2.5    40.5               06
 3933    1  0   1.037     0.0     0.0     7.9     0.0     0.0     0.0
 CERQUI_P_138   -97.0     0.0     0.0     2.8     0.0     0.0     0.0
                                               0.1%                 2042 PIRELLI-Y138  1    -7.9    -2.8     8.1               06
 3934    1  0   1.034     0.0     0.0     7.0     0.0     0.0     0.0
 LJALPT_A_138   -95.7     0.0     0.0     2.1     0.0     0.0     0.0
```

```
                                                  0.1%                 2041 ORIENTO-Y138  1    -7.0    -2.1     7.1                06
 3935    1  0   1.033     0.0     0.0     7.7     0.0     0.0     0.0
 TATUI__A_138   -98.5     0.0     0.0     2.3     0.0     0.0     0.0
                                                  0.1%                 2023 ALPARGA-Y138  1    -7.7    -2.3     7.8                06
 3936    1  0   1.051     0.0     0.0     4.8     0.0     0.0     0.0
 MIRACATU_138  -101.4     0.0     0.0     2.0     0.0     0.0     0.0
                                                 10.5%                  746 PERUIBE--138  1    -7.9    -1.3     7.6                06
                                                  4.2%                 2030 JUQUIA-Y-138  1     3.1    -0.7     3.0                06
CEPEL - CENTRO DE PESQUISAS DE ENERGIA ELETRICA - PROGRAMA DE ANALISE DE REDES - V08MAR05A                                PAG. 361

ANUAL 06/07 * SETEMBRO 2006 PESADA S/SE 19H N/NE 19H * ANAT0 - FSE - C13
RELATORIO COMPLETO DO SISTEMA * AREA 30 * *             ELEKTRO              *

X----------------- D A D O S  -  B A R R A ------------------------X------------ F L U X O S  -  C I R C U I T O S ------------X
 DA BARRA      TENSAO GERACAO INJ EQV  CARGA   ELO CC  SHUNT    MOTOR
 NUM. KV TIPO   MOD/     MW/     MW/     MW/     MW/   Mvar/     MW/
     NOME       ANG     Mvar    Mvar    Mvar    Mvar   EQUIV    Mvar  PARA BARRA                    FLUXOS
                                                FLUXO % SHUNT L         NUM.     NOME     NC     MW    Mvar  MVA/V_d   TAP  DEFAS TIE
X------------X-------X-------X-------X-------X-------X-------X-------X----X------------X--X-------X-------X-------X------X-----X---X

 3937    1  0   1.054     0.0     0.0     0.0     0.0     0.0     0.0
 PERUIBE2_138  -100.8     0.0     0.0     0.0     0.0     0.0     0.0
                                                  0.0%                  740 PERUIBPY-138  1     0.0     0.0     0.0                06
 3938    1  0   1.053     0.0     0.0     5.4     0.0     0.0     0.0
 ITANHA_2_138   -97.7     0.0     0.0     1.3     0.0     0.0     0.0
                                                 28.5%                  744 MONGAGU-Y138  1   -27.8     7.6    27.4                06
                                                 19.1%                 2029 ITANHA-Y-138  1    22.4    -8.9    22.9                06
 3940    1  0   1.005     0.0     0.0     5.2     0.0     0.0     0.0
 PARIQUERA-69  -105.3     0.0     0.0     0.2     0.0     0.0     0.0
                                                 46.7%                 1929 REGISTRO-69   1   -15.5    -0.5    15.4                06
                                                 41.0%                 3941 IGUAPE-69     1    10.3     0.3    10.2
 3941    1  0   0.955     0.0     0.0     9.8     0.0     0.0     0.0
 IGUAPE-69     -108.3     0.0     0.0     0.4     0.0     0.0     0.0
                                                 41.1%                 3940 PARIQUERA-69  1    -9.8    -0.4    10.3
 3946    1  0   1.030     0.0     0.0    13.2     0.0     0.0     0.0
 ITARARE2_138  -103.6     0.0     0.0     0.0     0.0     0.0     0.0
                                                  0.1%                 1930 ITARARE2-69   1   -13.2     0.0    12.8                06
 3947    1  0   1.029     0.0     0.0     0.8     0.0     0.0     0.0
 ITARA-EK-69   -103.9     0.0     0.0     0.0     0.0     0.0     0.0
                                                  2.4%                 1930 ITARARE2-69   1    -0.8     0.0     0.8                06
 3948    1  0   0.987     0.0     0.0     9.5     0.0     0.0     0.0
 ITAPORANGA    -106.1     0.0     0.0     2.2     0.0     0.0     0.0
                                                 30.0%                 1930 ITARARE2-69   1    -9.5    -2.2     9.9                06


TOTAIS DA AREA 30

X--------X--------X--------X--------X--------X--------X--------X--------X
  GERACAO  INJ EQV   CARGA   ELO CC    SHUNT   EXPORT   IMPORT   PERDAS
    MW/      MW/      MW/      MW/     Mvar/     MW/      MW/      MW/
   Mvar     Mvar     Mvar     Mvar     EQUIV    Mvar     Mvar     Mvar
X--------X--------X--------X--------X--------X--------X--------X--------X

     12.7      0.0   2045.7      0.0      0.0     31.9   2066.9      2.0
      0.0      0.0    327.5      0.0      0.0     24.2    328.1    -23.6
CEPEL - CENTRO DE PESQUISAS DE ENERGIA ELETRICA - PROGRAMA DE ANALISE DE REDES - V08MAR05A                                PAG. 362

ANUAL 06/07 * SETEMBRO 2006 PESADA S/SE 19H N/NE 19H * ANAT0 - FSE - C13
```

```
RELATORIO COMPLETO DO SISTEMA * AREA 31 * *             AES-SUL              *

X----------------- D A D O S  -  B A R R A -------------------------X------------ F L U X O S  -  C I R C U I T O S ------------X
 DA BARRA      TENSAO GERACAO INJ EQV  CARGA   ELO CC  SHUNT    MOTOR
 NUM. KV TIPO   MOD/     MW/     MW/     MW/     MW/   Mvar/     MW/
     NOME       ANG     Mvar    Mvar    Mvar    Mvar   EQUIV    Mvar  PARA BARRA                    FLUXOS
                                                FLUXO % SHUNT L         NUM.     NOME     NC     MW    Mvar  MVA/V_d   TAP  DEFAS TIE
X------------X-------X-------X-------X-------X-------X-------X-------X----X------------X--X-------X-------X-------X------X-----X---X

 1182   69  0   1.028     0.0     0.0    21.7     0.0     0.0     0.0
 Alegrete--69   -46.4     0.0     0.0     2.3     0.0     0.0     0.0
                                                 0.0%                    900 ALEGRETE-000  1     0.0     0.0     0.0 1.050F        19
                                                36.6%                    930 Alegrete-138  1     7.7    -5.3     9.1               20
                                                36.4%                    930 Alegrete-138  2     7.7    -5.3     9.1               20
                                                77.2%                   1185 Alegrete2-69  1   -37.2     8.3    37.0
 1184    1  0   1.014     0.0     0.0    14.0     0.0     0.0     0.0
 2IRMAOS--138   -70.4     0.0     0.0     0.5     0.0     0.0     0.0
                                                10.1%                   1241 EstVelha-138  1   -14.0    -0.5    13.8
 1185   69  0   1.030     0.0     0.0     0.0     0.0     0.0     0.0
 Alegrete2-69   -45.4     0.0     0.0     0.0     0.0     0.0     0.0
                                                77.2%                   1182 Alegrete--69  1    37.4    -7.8    37.1
                                                44.7%                   1186 Alegret2-230  1   -37.4     7.8    37.1               23
 1196   69  0   1.002     0.0     0.0    81.5     0.0     0.0     0.0
 CampoBom--69   -68.4     0.0     0.0     7.3     0.0     0.0     0.0
                                                49.3%                   1198 CampoBom-230  1   -40.8    -3.7    40.9               23
                                                49.1%                   1198 CampoBom-230  2   -40.7    -3.6    40.8               23
 1208   69  0   1.000     0.0     0.0     6.2     0.0     0.0     0.0
 Triunfo---69   -68.8     0.0     0.0     2.3     0.0     0.0     0.0
                                                 0.1%                   1203 Charquead-69  1    -9.7    -3.2    10.2               70
                                                 7.5%                   2053 SJeronimo-69  1     3.5     0.9     3.6               70
 1211   23  0   1.000     0.0     0.0     9.2     0.0     0.0     0.0
 JacuiAES--23   -56.4     0.0     0.0     1.7     0.0     0.0     0.0
                                                 0.1%                   1220 JacuiRGE--23  1    -9.2    -1.7     9.4               32
 1219  138  0   1.024     0.0     0.0     5.0     0.0     0.0     0.0
 Lansul---138   -68.6     0.0     0.0     1.7     0.0     0.0     0.0
                                                67.3%                   1257 CInduPAl-138  1   -74.2    -6.7    72.7               23
                                                62.7%                   2084 Pepsi----138  1    69.2     5.0    67.7
 1227  138  0   1.028     0.0     0.0     6.0     0.0     0.0     0.0
 MaxsPrin-138   -68.0     0.0     0.0     2.0     0.0     0.0     0.0
                                                75.9%                   1252 SaoLuis--138  1   -83.9    -7.6    82.0
                                                70.4%                   2099 Zoologic-138  1    77.9     5.6    76.0
 1235   69  0   1.000     0.0     0.0     9.1     0.0     0.0     0.0
 Macambara-69   -44.7     0.0     0.0    -1.6     0.0     0.0     0.0
                                                13.5%                   1225 Macambar-230  1   -11.0     2.1    11.2               23
                                                 7.8%                   9205 Macambara-23  1     1.9    -0.5     2.0 1.002*
 1237  138  0   0.975     0.0     0.0    29.6     0.0     0.0     0.0
 Monteneg-138   -74.3     0.0     0.0     1.8     0.0     0.0     0.0
                                                22.7%                   1280 SaoSCai--138  1   -29.6    -1.8    30.4
CEPEL - CENTRO DE PESQUISAS DE ENERGIA ELETRICA - PROGRAMA DE ANALISE DE REDES - V08MAR05A                                PAG. 363

ANUAL 06/07 * SETEMBRO 2006 PESADA S/SE 19H N/NE 19H * ANAT0 - FSE - C13
RELATORIO COMPLETO DO SISTEMA * AREA 31 * *             AES-SUL              *

X----------------- D A D O S  -  B A R R A -------------------------X------------ F L U X O S  -  C I R C U I T O S ------------X
 DA BARRA      TENSAO GERACAO INJ EQV  CARGA   ELO CC  SHUNT    MOTOR
 NUM. KV TIPO   MOD/     MW/     MW/     MW/     MW/   Mvar/     MW/
     NOME       ANG     Mvar    Mvar    Mvar    Mvar   EQUIV    Mvar  PARA BARRA                    FLUXOS
                                                FLUXO % SHUNT L         NUM.     NOME     NC     MW    Mvar  MVA/V_d   TAP  DEFAS TIE
X------------X-------X-------X-------X-------X-------X-------X-------X----X------------X--X-------X-------X-------X------X-----X---X
```

```
 1241  138  0   1.015     0.0     0.0    26.1     0.0     0.0     0.0
 EstVelha-138   -70.2     0.0     0.0    -3.4     0.0     0.0     0.0
                                          10.1%                 1184 2IRMAOS--138  1    14.0     0.0    13.8
                                          29.0%                 2090 Scharlau-138  1   -40.1     3.4    39.7
 1252  138  0   1.030     0.0     0.0     2.9     0.0     0.0     0.0
 SaoLuis--138   -67.7     0.0     0.0     0.9     0.0     0.0     0.0
                                          75.9%                 1227 MaxsPrin-138  1    84.1     7.8    81.9
                                          78.5%                 1257 CInduPAl-138  1   -87.0    -8.7    84.8               23
 1253   69  0   1.000     0.0     0.0    12.1     0.0     0.0     0.0
 SaoBorja--69   -49.0     0.0     0.0    -0.1     0.0     0.0     0.0
                                          37.6%                 1254 SaoBorja-230  1   -18.8    -0.3    18.8               23
                                          26.8%                 9206 SaoBorja--23  1     6.7     0.4     6.7 0.999*
 1272   69  0   1.002     0.0     0.0     5.0     0.0     0.0     0.0
 PAleg9AES-69   -69.7     0.0     0.0     1.3     0.0     0.0     0.0
                                           0.1%                 1266 PAlegre9--69  1    -5.0    -1.3     5.2               70
 1273  230  0   1.028     0.0     0.0    25.4     0.0     0.0     0.0
 Siderurg-230   -65.1     0.0     0.0     6.9     0.0     0.0     0.0
                                          10.7%                 1258 CInduPAl-230  1   -25.4    -6.9    25.6               23
 1276  138  0   1.006     0.0     0.0    39.3     0.0     0.0     0.0
 SMaria1--138   -53.1     0.0     0.0    10.1     0.0     0.0     0.0
                                          24.8%                  930 Alegrete-138  1   -15.0     0.5    14.9               20
                                          32.2%                 1216 Jacui----138  1   -24.3   -10.6    26.4               23
 1280  138  0   0.988     0.0     0.0    21.4     0.0     0.0     0.0
 SaoSCai--138   -72.7     0.0     0.0     5.1     0.0     0.0     0.0
                                          22.6%                 1237 Monteneg-138  1    29.9     1.3    30.3
                                          39.1%                 2090 Scharlau-138  1   -51.3    -6.4    52.4
 1289   69  0   1.000     0.0     0.0    54.9     0.0     0.0     0.0
 SVicente--69   -52.5     0.0     0.0    18.4     0.0     0.0     0.0
                                          62.6%                 1286 SVicente-230  1   -29.7    -9.8    31.3               23
                                          60.6%                 1286 SVicente-230  2   -28.8    -9.5    30.3               23
                                          41.0%                 9208 SVicente--23  1     3.6     0.8     3.7 0.993*
 1295   69  0   1.020     0.0     0.0    33.5     0.0     0.0     0.0
 Uruguaia5-69   -36.2     0.0     0.0     4.9     0.0     0.0     0.0
                                          20.0%                 1296 Uruguai5-230  1   -16.7    -2.4    16.6               23
                                          20.0%                 1296 Uruguai5-230  2   -16.7    -2.4    16.6               23
CEPEL - CENTRO DE PESQUISAS DE ENERGIA ELETRICA - PROGRAMA DE ANALISE DE REDES - V08MAR05A                              PAG. 364

ANUAL 06/07 * SETEMBRO 2006 PESADA S/SE 19H N/NE 19H * ANAT0 - FSE - C13
RELATORIO COMPLETO DO SISTEMA * AREA 31 * *            AES-SUL             *

X----------------- D A D O S  -  B A R R A -------------------------X------------ F L U X O S  -  C I R C U I T O S ------------X
 DA BARRA      TENSAO GERACAO INJ EQV  CARGA   ELO CC  SHUNT    MOTOR
 NUM. KV TIPO   MOD/     MW/     MW/     MW/     MW/   Mvar/     MW/
     NOME       ANG     Mvar    Mvar    Mvar    Mvar   EQUIV    Mvar  PARA BARRA                  FLUXOS
                                          FLUXO % SHUNT L         NUM.     NOME     NC     MW    Mvar  MVA/V_d   TAP  DEFAS TIE
X------------X-------X-------X-------X-------X-------X-------X-------X----X------------X--X-------X-------X-------X------X-----X---X

 1298   69  0   1.041     0.0     0.0    54.9     0.0     0.0     0.0
 VenAires--69   -64.9     0.0     0.0    11.5     0.0     0.0     0.0
                                          47.9%                 1297 VenAires-FIC  1   -36.8    -6.8    35.9 1.000F        23
                                          48.0%                 1299 VenAires-230  1   -36.2    -9.6    36.0               23
                                          20.5%                 9210 VAiresT34-13  1     3.4     0.3     3.3 0.994S
                                          59.2%                 9211 VAires-T5-13  1    14.7     4.7    14.8 1.023*
 1303   69  0   1.012     0.0     0.0    10.9     0.0     0.0     0.0
 BUNGE-----69   -68.9     0.0     0.0     4.7     0.0     0.0     0.0
                                          16.3%                 1312 ESTEIO----69  1     7.9     0.0     7.8
                                          39.9%                 1332 PETROBRAS-69  1   -18.8    -4.7    19.2
 1304   69  0   1.000     0.0     0.0    15.6     0.0     0.0     0.0
 Taquari---69   -68.8     0.0     0.0     5.5     0.0     0.0     0.0
                                           0.2%                 1203 Charquead-69  1   -15.6    -5.5    16.5               70
```

```
 1312   69  0   1.012     0.0     0.0    21.9     0.0     0.0     0.0
 ESTEIO----69   -69.0     0.0     0.0    -1.5     0.0     0.0     0.0
                                            16.3%                 1303 BUNGE-----69  1    -7.9     0.0     7.8
                                            29.0%                 1341 SRITA---D-69  1   -14.0     1.5    13.9
 1324   23  0   1.001     0.0     0.0    39.3     0.0     0.0     0.0
 Canoas1---23   -71.3     0.0     0.0    12.7     0.0     0.0     0.0
                                            82.6%                 1190 Canoas1--230  1   -39.3   -12.7    41.3                23
 1332   69  0   1.018    24.0     0.0     4.0     0.0     0.0     0.0
 PETROBRAS-69   -68.4     0.0     0.0     1.7     0.0     0.0     0.0
                                            39.9%                 1303 BUNGE-----69  1    18.9     4.9    19.2
                                            13.8%                 2067 Cachoeiri-69  1     1.1    -6.6     6.6
 1334   69  0   1.020     0.0     0.0     7.9     0.0     0.0     0.0
 POLOINDUD-69   -66.8     0.0     0.0     2.7     0.0     0.0     0.0
                                            24.2%                 1335 POLOPETRD-69  1   -23.3    -2.3    23.0
                                            28.1%                 1339 SITEL---D-69  1    15.4    -0.4    15.1
 1335   69  0   1.020     0.0     0.0     0.0     0.0     0.0     0.0
 POLOPETRD-69   -66.8     0.0     0.0     0.0     0.0     0.0     0.0
                                            24.2%                 1334 POLOINDUD-69  1    23.4     2.3    23.0
                                            24.2%                 2077 PoloPetro-69  1   -23.4    -2.3    23.0
 1336   35  0   1.029     0.0     0.0     7.0     0.0     0.0     0.0
 PoloP-Cat-34   -64.7     0.0     0.0     3.0     0.0     0.0     0.0
                                             9.9%                 1204 PoloPetr-230  1    -7.0    -3.0     7.4                23
 1339   69  0   1.018     0.0     0.0     0.9     0.0     0.0     0.0
 SITEL---D-69   -67.3     0.0     0.0     0.4     0.0     0.0     0.0
                                            28.0%                 1334 POLOINDUD-69  1   -15.4     0.5    15.1
                                            26.4%                 1341 SRITA---D-69  1    14.5    -0.9    14.3
CEPEL - CENTRO DE PESQUISAS DE ENERGIA ELETRICA - PROGRAMA DE ANALISE DE REDES - V08MAR05A                              PAG. 365

ANUAL 06/07 * SETEMBRO 2006 PESADA S/SE 19H N/NE 19H * ANAT0 - FSE - C13
RELATORIO COMPLETO DO SISTEMA * AREA 31 * *            AES-SUL              *

X----------------- D A D O S  -  B A R R A -------------------------X------------ F L U X O S  -  C I R C U I T O S ------------X
 DA BARRA      TENSAO GERACAO INJ EQV  CARGA   ELO CC  SHUNT    MOTOR
 NUM. KV TIPO   MOD/     MW/     MW/     MW/     MW/   Mvar/     MW/
     NOME       ANG     Mvar    Mvar    Mvar    Mvar   EQUIV    Mvar  PARA BARRA                    FLUXOS
                                                FLUXO % SHUNT L         NUM.     NOME     NC     MW    Mvar  MVA/V_d   TAP  DEFAS TIE
X------------X-------X-------X-------X-------X-------X-------X-------X----X------------X--X-------X-------X-------X------X-----X---X

 1341   69  0   1.015     0.0     0.0     0.4     0.0     0.0     0.0
 SRITA---D-69   -68.1     0.0     0.0     0.2     0.0     0.0     0.0
                                            29.0%                 1312 ESTEIO----69  1    14.1    -1.3    13.9
                                            26.4%                 1339 SITEL---D-69  1   -14.5     1.1    14.3
 2067   69  0   1.022     0.0     0.0     0.0     0.0     0.0     0.0
 Cachoeiri-69   -68.5     0.0     0.0     0.0     0.0     0.0     0.0
                                            13.8%                 1332 PETROBRAS-69  1    -1.1     6.7     6.6
                                             6.0%                 2066 Cachoeir-FIC  1     1.1    -6.7     6.6 0.962*         23
 2076    1  0   0.997     0.0     0.0    29.9     0.0     0.0     0.0
 StaCruz1--13   -65.4     0.0     0.0     6.1     0.0     0.0     0.0
                                            55.1%                 1329 SCruz1-2-FIC  1   -14.5    -3.0    14.9                23
                                            58.2%                 2097 StaCruz1-FIC  1   -15.4    -3.1    15.7                23
 2077   69  0   1.022     0.0     0.0     0.0     0.0     0.0     0.0
 PoloPetro-69   -66.0     0.0     0.0     0.0     0.0     0.0     0.0
                                            46.0%                 1204 PoloPetr-230  1   -23.4    -2.6    23.0                23
                                            24.2%                 1335 POLOPETRD-69  1    23.4     2.6    23.0
 2081   69  0   1.001     0.0     0.0    71.5     0.0     0.0     0.0
 Lajeado---69   -66.5     0.0     0.0     6.9     0.0     0.0     0.0
                                            43.0%                 1327 Lajeado2-FIC  1   -35.5    -3.4    35.7                23
                                            43.5%                 2085 Lajeado--FIC  1   -36.0    -3.5    36.1                23
 2083    1  0   0.999     0.0     0.0    21.4     0.0     0.0     0.0
 Lajeado---13   -67.4     0.0     0.0     4.5     0.0     0.0     0.0
```

```
                                                 40.5%                 1327 Lajeado2-FIC  1   -10.7    -2.2    10.9                23
                                                 40.7%                 2085 Lajeado--FIC  1   -10.7    -2.3    11.0                23
 2084  138  0   1.023     0.0     0.0     3.0     0.0     0.0     0.0
 Pepsi----138   -68.7     0.0     0.0     1.0     0.0     0.0     0.0
                                                 62.7%                 1219 Lansul---138  1   -69.1    -5.0    67.7
                                                 59.9%                 2090 Scharlau-138  1    66.1     4.0    64.7
 2087   69  0   1.032     0.0     0.0    71.1     0.0     0.0     0.0
 StaMaria3-69   -53.9     0.0     0.0     9.8     0.0     0.0     0.0
                                                 41.9%                 1278 SMaria3--230  1   -35.5    -4.9    34.8                23
                                                 41.9%                 1278 SMaria3--230  2   -35.5    -4.9    34.8                23
 2088   69  0   1.001     0.0     0.0    42.7     0.0     0.0     0.0
 StaCruz1--69   -64.4     0.0     0.0     5.5     0.0     0.0     0.0
                                                 26.1%                 1329 SCruz1-2-FIC  1   -21.5    -2.8    21.7                23
                                                 25.7%                 2097 StaCruz1-FIC  1   -21.2    -2.7    21.3                23
CEPEL - CENTRO DE PESQUISAS DE ENERGIA ELETRICA - PROGRAMA DE ANALISE DE REDES - V08MAR05A                                PAG. 366

ANUAL 06/07 * SETEMBRO 2006 PESADA S/SE 19H N/NE 19H * ANAT0 - FSE - C13
RELATORIO COMPLETO DO SISTEMA * AREA 31 * *             AES-SUL             *

X----------------- D A D O S  -  B A R R A -------------------------X------------ F L U X O S  -  C I R C U I T O S ------------X
 DA BARRA      TENSAO GERACAO INJ EQV  CARGA   ELO CC  SHUNT    MOTOR
 NUM. KV TIPO   MOD/     MW/     MW/     MW/     MW/   Mvar/     MW/
     NOME       ANG     Mvar    Mvar    Mvar    Mvar   EQUIV    Mvar  PARA BARRA                    FLUXOS
                                                FLUXO % SHUNT L        NUM.     NOME     NC     MW    Mvar  MVA/V_d   TAP  DEFAS TIE
X------------X-------X-------X-------X-------X-------X-------X-------X----X------------X--X-------X-------X-------X------X-----X---X

 2090  138  0   1.017     0.0     0.0    25.0     0.0     0.0     0.0
 Scharlau-138   -69.7     0.0     0.0     3.3     0.0     0.0     0.0
                                                 29.0%                 1241 EstVelha-138  1    40.2    -3.6    39.7
                                                 38.9%                 1280 SaoSCai--138  1    52.4     7.8    52.2
                                                 60.0%                 2084 Pepsi----138  1   -65.8    -3.6    64.8
                                                  0.0%                 2093 Scharlau-FIC  1     0.0     0.0     0.0 0.996F         23
                                                 47.4%                 2099 Zoologic-138  1   -51.9    -3.8    51.2
 2091   69  0   1.042     0.0     0.0     0.0     0.0     0.0     0.0
 Scharlau--69   -69.7     0.0     0.0     0.0     0.0     0.0     0.0
                                                  0.0%                 2093 Scharlau-FIC  1     0.0     0.0     0.0 1.021*         23
 2099  138  0   1.020     0.0     0.0    25.4     0.0     0.0     0.0
 Zoologic-138   -69.2     0.0     0.0     1.0     0.0     0.0     0.0
                                                 70.4%                 1227 MaxsPrin-138  1   -77.4    -4.7    76.0
                                                 47.4%                 2090 Scharlau-138  1    52.0     3.7    51.1
 3000  138  0   1.013     0.0     0.0    21.3     0.0     0.0     0.0
 Sapucaia-138   -69.4     0.0     0.0     4.4     0.0     0.0     0.0
                                                 15.7%                 3003 SapucaiY-138  1   -21.3    -4.4    21.5
 3001  138  0   1.012     0.0     0.0    34.2     0.0     0.0     0.0
 SLeopold-138   -69.6     0.0     0.0     4.9     0.0     0.0     0.0
                                                 31.6%                 3003 SapucaiY-138  1   -34.2    -4.9    34.2
 3003  138  0   1.015     0.0     0.0     0.0     0.0     0.0     0.0
 SapucaiY-138   -69.2     0.0     0.0     0.0     0.0     0.0     0.0
                                                 51.4%                 2068 Cachoeir-138  1   -55.6    -8.9    55.5                32
                                                 15.6%                 3000 Sapucaia-138  1    21.3     4.3    21.4
                                                 31.6%                 3001 SLeopold-138  1    34.3     4.6    34.1
 9201   14  0   1.002     0.0     0.0    34.4     0.0     0.0     0.0
 CampoBom--23   -69.7     0.0     0.0     7.0     0.0     0.0     0.0
                                                 70.1%                 1198 CampoBom-230  1   -34.4    -7.0    35.1                23
 9203    1  0   0.994     0.0     0.0     7.8     0.0     0.0     0.0
 Livrament-13   -55.3     0.0     0.0     3.6     0.0     0.0     0.0
                                                 50.8%                 9202 Livramen-FIC  1    -7.8    -3.6     8.6 1.000F         23
 9204   69  0   1.000     0.0     0.0     9.6     0.0     0.0     0.0
 Livrament-69   -54.5     0.0     0.0     3.0     0.0     0.0     0.0
                                                 20.1%                 9202 Livramen-FIC  1    -9.6    -3.0    10.1 1.000F         23
```

```
 9205   14  0   1.000     0.0     0.0     1.9     0.0     0.0     0.0
 Macambara-23   -45.2     0.0     0.0    -0.5     0.0     0.0     0.0
                                              7.9%                 1235 Macambara-69  1    -1.9     0.5     2.0
CEPEL - CENTRO DE PESQUISAS DE ENERGIA ELETRICA - PROGRAMA DE ANALISE DE REDES - V08MAR05A                                PAG. 367

ANUAL 06/07 * SETEMBRO 2006 PESADA S/SE 19H N/NE 19H * ANAT0 - FSE - C13
RELATORIO COMPLETO DO SISTEMA * AREA 31 * *             AES-SUL              *

X----------------- D A D O S  -  B A R R A -------------------------X------------ F L U X O S  -  C I R C U I T O S ------------X
 DA BARRA      TENSAO GERACAO INJ EQV  CARGA   ELO CC  SHUNT    MOTOR
 NUM. KV TIPO   MOD/     MW/     MW/     MW/     MW/   Mvar/     MW/
     NOME       ANG     Mvar    Mvar    Mvar    Mvar   EQUIV    Mvar  PARA BARRA                    FLUXOS
                                                FLUXO % SHUNT L         NUM.     NOME     NC     MW    Mvar  MVA/V_d   TAP  DEFAS TIE
X------------X-------X-------X-------X-------X-------X-------X-------X----X------------X--X-------X-------X-------X------X-----X---X

 9206   14  0   1.000     0.0     0.0     6.7     0.0     0.0     0.0
 SaoBorja--23   -50.5     0.0     0.0     0.2     0.0     0.0     0.0
                                             26.8%                 1253 SaoBorja--69  1    -6.7    -0.2     6.7
 9207   14  0   1.002     0.0     0.0    78.3     0.0     0.0     0.0
 CIndustri-23   -71.0     0.0     0.0    22.7     0.0     0.0     0.0
                                             81.4%                 1258 CInduPAl-230  1   -78.3   -22.7    81.4               23
 9208   14  0   1.000     0.0     0.0     3.6     0.0     0.0     0.0
 SVicente--23   -54.3     0.0     0.0     0.7     0.0     0.0     0.0
                                             40.8%                 1289 SVicente--69  1    -3.6    -0.7     3.7
 9209   14  0   1.000     0.0     0.0    22.7     0.0     0.0     0.0
 Scharlau--23   -66.5     0.0     0.0     1.2     0.0     0.0     0.0
                                             45.4%                 2086 Scharlau-230  1   -22.7    -1.2    22.7               23
 9210    1  0   1.046     0.0     0.0     3.4     0.0     0.0     0.0
 VAiresT34-13   -66.0     0.0     0.0     0.2     0.0     0.0     0.0
                                             20.3%                 1298 VenAires--69  1    -3.4    -0.2     3.3
 9211    1  0   1.002     0.0     0.0    14.7     0.0     0.0     0.0
 VAires-T5-13   -68.0     0.0     0.0     3.8     0.0     0.0     0.0
                                             60.6%                 1298 VenAires--69  1   -14.7    -3.8    15.1
 9212    1  0   1.001     0.0     0.0     8.0     0.0     0.0     0.0
 Grava2AES-23   -70.0     0.0     0.0     2.6     0.0     0.0     0.0
                                              0.1%                 9284 Grava2RGE-23  1    -8.0    -2.6     8.4               32


TOTAIS DA AREA 31


X--------X--------X--------X--------X--------X--------X--------X--------X
  GERACAO  INJ EQV   CARGA   ELO CC    SHUNT   EXPORT   IMPORT   PERDAS
    MW/      MW/      MW/     MW/     Mvar/     MW/      MW/      MW/
   Mvar     Mvar     Mvar    Mvar     EQUIV    Mvar     Mvar     Mvar
X--------X--------X--------X--------X--------X--------X--------X--------X

     24.0      0.0   1102.3      0.0      0.0     20.1   1102.1      3.8
      0.0      0.0    194.9      0.0      0.0     22.2    210.1     -6.9
CEPEL - CENTRO DE PESQUISAS DE ENERGIA ELETRICA - PROGRAMA DE ANALISE DE REDES - V08MAR05A                                PAG. 368

ANUAL 06/07 * SETEMBRO 2006 PESADA S/SE 19H N/NE 19H * ANAT0 - FSE - C13
RELATORIO COMPLETO DO SISTEMA * AREA 32 * *               RGE                *

X----------------- D A D O S  -  B A R R A -------------------------X------------ F L U X O S  -  C I R C U I T O S ------------X
 DA BARRA      TENSAO GERACAO INJ EQV  CARGA   ELO CC  SHUNT    MOTOR
 NUM. KV TIPO   MOD/     MW/     MW/     MW/     MW/   Mvar/     MW/
     NOME       ANG     Mvar    Mvar    Mvar    Mvar   EQUIV    Mvar  PARA BARRA                    FLUXOS
                                                FLUXO % SHUNT L         NUM.     NOME     NC     MW    Mvar  MVA/V_d   TAP  DEFAS TIE
```

```
X------------X-------X-------X-------X-------X-------X-------X-------X----X------------X--X-------X-------X-------X------X-----X---X

 1193   69  0   1.011     0.0     0.0    34.3     0.0     0.0     0.0
 Caxias5---69   -70.5     0.0     0.0     0.1     0.0     0.0     0.0
                                              34.4%                 1192 Caxias5--230  1   -55.8   -13.7    56.8                20
                                              29.9%                 1201 Caxias2---69  1    21.5    13.6    25.1
 1201   69  0   1.001     0.0     0.0   108.1     0.0     0.0     0.0
 Caxias2---69   -71.0     0.0     0.0     6.6     0.0     0.0     0.0
                                              30.0%                 1193 Caxias5---69  1   -21.4   -13.3    25.2
                                              64.2%                 1200 Caxias2--230  1  -105.1    13.3   105.9                23
                                              46.5%                 9281 Caxias2---13  1    18.4    -6.6    19.5 1.017*
 1205   69  0   1.011     0.0     0.0    43.1     0.0     0.0     0.0
 Garibaldi-69   -66.9     0.0     0.0     0.2     0.0     0.0     0.0
                                              51.4%                 9280 Garibal1-FIC  1   -43.1    -0.2    42.6
 1207   69  0   1.030     0.0     0.0    80.0     0.0     0.0     0.0
 Farroupil-69   -65.4     0.0     0.0     0.1     0.0     0.0     0.0
                                              43.3%                  962 Farroupi-230  1   -39.2    -0.1    38.1                20
                                              45.0%                  962 Farroupi-230  2   -40.8     0.0    39.6                20
 1214   69  0   1.001    11.0     0.0   110.7     0.0     0.0     0.0
 Guarita---69   -62.0     4.4     0.0    17.4     0.0     0.0     0.0
                                              57.3%                 1213 Guarita--230  1   -47.1    -6.5    47.5                23
                                              57.3%                 1213 Guarita--230  2   -47.1    -6.5    47.5                23
                                               0.5%                 1319 CGonzaPCH-69  1    -5.4     0.0     5.4
 1220   23  0   1.000     0.0     0.0     5.0     0.0     0.0     0.0
 JacuiRGE--23   -56.4     0.0     0.0     0.4     0.0     0.0     0.0
                                               0.1%                 1211 JacuiAES--23  1     9.2     1.7     9.4                31
                                           SUP 119.6%               1216 Jacui----138  1   -14.2    -2.1    14.4                23
 1221  138  0   1.002     0.0     0.0    18.6     0.0     0.0     0.0
 LVermel1-138   -51.4     0.0     0.0     3.8     0.0     0.0     0.0
                                              47.3%                 1277 PFundo1--138  1    27.9   -26.9    38.7
                                              36.3%                 1326 LVermel2-138  1   -46.5    23.1    51.9
 1222  138  0   1.036     0.0     0.0    34.4     0.0     0.0     0.0
 Marau----138   -58.1     0.0     0.0    -0.5     0.0     0.0     0.0
                                              43.7%                 1275 StaMarta-138  1   -34.4     0.5    33.2
 1224   69  0   1.010     0.0     0.0   109.8     0.0     0.0     0.0
 GravatRGE-69   -71.3     0.0     0.0     6.5     0.0     0.0     0.0
                                               1.1%                 1209 Gravatai2-69  1  -109.8    -6.5   108.9                70
 1226   69  0   1.020     0.0     0.0    60.3     0.0     0.0     0.0
 NPrata2---69   -67.7     0.0     0.0     6.4     0.0     0.0     0.0
                                              59.0%                 1228 NPrata2--230  1   -30.0    -3.2    29.5                23
                                              59.8%                 1228 NPrata2--230  2   -30.3    -3.2    29.9                23
CEPEL - CENTRO DE PESQUISAS DE ENERGIA ELETRICA - PROGRAMA DE ANALISE DE REDES - V08MAR05A                                PAG. 369

ANUAL 06/07 * SETEMBRO 2006 PESADA S/SE 19H N/NE 19H * ANAT0 - FSE - C13
RELATORIO COMPLETO DO SISTEMA * AREA 32 * *              RGE              *

X----------------- D A D O S  -  B A R R A -------------------------X------------ F L U X O S  -  C I R C U I T O S ------------X
 DA BARRA      TENSAO GERACAO INJ EQV  CARGA   ELO CC  SHUNT    MOTOR
 NUM. KV TIPO   MOD/     MW/     MW/     MW/     MW/   Mvar/     MW/
     NOME       ANG     Mvar    Mvar    Mvar    Mvar   EQUIV    Mvar  PARA BARRA                    FLUXOS
                                              FLUXO % SHUNT L         NUM.     NOME     NC     MW    Mvar  MVA/V_d   TAP  DEFAS TIE
X------------X-------X-------X-------X-------X-------X-------X-------X----X------------X--X-------X-------X-------X------X-----X---X

 1251   69  0   1.000     0.0     0.0     0.0     0.0     0.0     0.0
 StoAngelo-69   -54.3     0.0     0.0     0.0     0.0     0.0     0.0
                                              26.1%                 1250 SAngelo2-230  1   -21.5    -2.7    21.7                23
                                              26.1%                 1250 SAngelo2-230  2   -21.5    -2.7    21.7                23
                                              37.0%                 1311 SAngelo-1-69  1    25.5     0.7    25.5
                                              72.4%                 9285 StoAngelo-23  1    17.5     4.7    18.1 0.985*
 1275  138  0   1.046     0.0     0.0    11.8     0.0     0.0     0.0
```

```
 StaMarta-138   -56.5     0.0     0.0     2.3     0.0     0.0     0.0
                                                43.8%                 1222 Marau----138  1    34.8    -1.7    33.3
                                                27.8%                 1277 PFundo1--138  1     1.3    23.8    22.8
                                                37.9%                 1281 StaMarta-230  1   -26.9   -12.7    28.5 1.046*        23
                                                37.9%                 1281 StaMarta-230  2   -26.9   -12.7    28.5 1.046*        23
                                                17.6%                 1284 StaMarta--46  1     6.0     1.0     5.8 1.040*
 1277  138  0   1.036     0.0     0.0    27.8     0.0     0.0     0.0
 PFundo1--138   -56.3     0.0     0.0     0.4     0.0     0.0     0.0
                                                42.5%                 1221 LVermel1-138  1   -26.6    24.4    34.8
                                                29.2%                 1275 StaMarta-138  1    -1.2   -24.8    23.9
 1279   69  0   1.051     0.0     0.0    24.7     0.0     0.0     0.0
 StaMarta--69   -59.1     0.0     0.0     0.9     0.0     0.0     0.0
                                                62.7%                 1281 StaMarta-230  1   -53.5   -11.2    52.0               23
                                                97.1%                 1300 Carazin-D-69  1    28.8    10.3    29.1
 1282   69  0   1.015     0.0     0.0    88.4     0.0     0.0     0.0
 StaRosa---69   -58.1     0.0     0.0     8.5     0.0     0.0     0.0
                                                52.7%                 1283 StaRosa--230  1   -44.2    -4.3    43.7               23
                                                52.7%                 1283 StaRosa--230  2   -44.2    -4.3    43.7               23
 1284   35  0   1.002     0.0     0.0     6.0     0.0     0.0     0.0
 StaMarta--46   -58.1     0.0     0.0     0.8     0.0     0.0     0.0
                                                18.3%                 1275 StaMarta-138  1    -6.0    -0.8     6.0
 1290  138  0   1.011     0.0     0.0    12.9     0.0     0.0     0.0
 3Coroas--138   -68.8     0.0     0.0    -2.8     0.0     0.0     0.0
                                                20.2%                 2064 Canastra-138  1   -10.7    10.1    14.6               23
                                                 7.7%                 2094 Taquara--138  1    -2.2    -7.3     7.5
 1292   69  0   1.000     0.0     0.0    48.4     0.0     0.0     0.0
 Tapera2---69   -56.6     0.0     0.0     3.7     0.0     0.0     0.0
                                                29.2%                 1291 Tapera2--230  1   -24.2    -1.9    24.3               23
                                                29.2%                 1291 Tapera2--230  2   -24.2    -1.9    24.3               23
CEPEL - CENTRO DE PESQUISAS DE ENERGIA ELETRICA - PROGRAMA DE ANALISE DE REDES - V08MAR05A                              PAG. 370

ANUAL 06/07 * SETEMBRO 2006 PESADA S/SE 19H N/NE 19H * ANAT0 - FSE - C13
RELATORIO COMPLETO DO SISTEMA * AREA 32 * *               RGE                 *

X----------------- D A D O S  -  B A R R A ------------------------X------------ F L U X O S  -  C I R C U I T O S ------------X
 DA BARRA       TENSAO GERACAO INJ EQV  CARGA   ELO CC  SHUNT    MOTOR
 NUM. KV TIPO   MOD/     MW/     MW/     MW/     MW/   Mvar/     MW/
     NOME       ANG     Mvar    Mvar    Mvar    Mvar   EQUIV     Mvar  PARA BARRA                    FLUXOS
                                                FLUXO % SHUNT L         NUM.     NOME     NC     MW    Mvar  MVA/V_d   TAP  DEFAS TIE
X------------X-------X-------X-------X-------X-------X-------X-------X----X------------X--X-------X-------X-------X------X-----X---X

 1300   69  0   0.947     0.0     0.0     0.0     0.0     0.0     0.0
 Carazin-D-69   -63.9     0.0     0.0     0.0     0.0     0.0     0.0
                                                97.7%                 1279 StaMarta--69  1   -26.7    -7.7    29.3
                                                77.3%                 1305 Carazin-1-69  1    21.2     5.8    23.2
                                                20.5%                 1306 Carazin-2-69  1     5.5     1.9     6.1
 1301   69  0   1.000     0.0     0.0    18.2     0.0     0.0     0.0
 CruzAlta1-69   -58.7     0.0     0.0     3.0     0.0     0.0     0.0
                                                 0.0%                 1302 Ijui-1----69  1     0.0     0.0     0.0
                                                68.4%                 1307 Panambi---69  1    15.3     3.5    15.7
                                                63.2%                 2061 CruzAlta-138  1   -33.5    -6.5    34.1
 1302   69  0   0.975    13.5     0.0    26.6     0.0     0.0     0.0
 Ijui-1----69   -59.4     5.4     0.0     4.0     0.0     0.0     0.0
                                                 0.0%                 1301 CruzAlta1-69  1     0.0     0.0     0.0
                                                30.7%                 1311 SAngelo-1-69  1   -13.1     1.4    13.5
 1305   69  0   0.925     0.0     0.0    20.8     0.0     0.0     0.0
 Carazin-1-69   -65.1     0.0     0.0     5.4     0.0     0.0     0.0
                                                77.4%                 1300 Carazin-D-69  1   -20.8    -5.4    23.2
 1306   69  0   0.946     0.0     0.0     5.5     0.0     0.0     0.0
 Carazin-2-69   -63.9     0.0     0.0     1.9     0.0     0.0     0.0
```

```
                                                  20.5%                 1300 Carazin-D-69  1    -5.5    -1.9     6.1
 1307   69  0   0.914     0.0     0.0    14.2     0.0     0.0     0.0
 Panambi---69   -62.4     0.0     0.0     2.8     0.0     0.0     0.0
                                                  68.9%                 1301 CruzAlta1-69  1   -14.2    -2.8    15.8
 1310  138  0   1.002     0.0     0.0    20.1     0.0     0.0     0.0
 Erechim2-138   -61.7     0.0     0.0    -0.3     0.0     0.0     0.0
                                                  14.0%                 2069 Erechim1-138  1   -20.1     0.3    20.1
 1311   69  0   0.991     0.0     0.0    11.9     0.0     0.0     0.0
 SAngelo-1-69   -56.3     0.0     0.0     1.3     0.0     0.0     0.0
                                                  37.0%                 1251 StoAngelo-69  1   -25.3     0.0    25.5
                                                  30.8%                 1302 Ijui-1----69  1    13.4    -1.3    13.6
 1318  138  0   1.004    19.0     0.0     0.0     0.0     0.0     0.0
 PaimFPCH-138   -61.2     0.0     0.0     0.0     0.0     0.0     0.0
                                                   1.9%                 2069 Erechim1-138  1    19.0     0.0    18.9
 1319   69  0   1.001     5.4     0.0     0.0     0.0     0.0     0.0
 CGonzaPCH-69   -62.0     0.0     0.0     0.0     0.0     0.0     0.0
                                                   0.5%                 1214 Guarita---69  1     5.4     0.0     5.4
CEPEL - CENTRO DE PESQUISAS DE ENERGIA ELETRICA - PROGRAMA DE ANALISE DE REDES - V08MAR05A                          PAG. 371

ANUAL 06/07 * SETEMBRO 2006 PESADA S/SE 19H N/NE 19H * ANAT0 - FSE - C13
RELATORIO COMPLETO DO SISTEMA * AREA 32 * *              RGE                 *

X----------------- D A D O S  -  B A R R A ------------------------X------------ F L U X O S  -  C I R C U I T O S ------------X
 DA BARRA      TENSAO GERACAO INJ EQV  CARGA   ELO CC  SHUNT    MOTOR
 NUM. KV TIPO   MOD/     MW/     MW/     MW/     MW/   Mvar/     MW/
     NOME       ANG     Mvar    Mvar    Mvar    Mvar   EQUIV    Mvar  PARA BARRA                    FLUXOS
                                                FLUXO % SHUNT L         NUM.     NOME     NC     MW    Mvar  MVA/V_d   TAP  DEFAS TIE
X------------X-------X-------X-------X-------X-------X-------X-------X----X------------X--X-------X-------X-------X------X-----X---X

 1326  138  0   1.000     0.0     0.0     0.0     0.0     0.0     0.0
 LVermel2-138   -50.9     0.0     0.0     0.0     0.0     0.0     0.0
                                                  36.4%                 1221 LVermel1-138  1    46.7   -23.1    52.1
                                                  59.3%                 1325 LVermelh-230  1   -81.7    35.3    89.0              23
                                                  29.5%                 1328 Vacaria--138  1    21.7   -10.8    24.2
                                                   9.4%                 1340 Tapejara-138  1    13.4    -1.4    13.4
 1328  138  0   0.997     0.0     0.0    21.3     0.0     0.0     0.0
 Vacaria--138   -53.5     0.0     0.0    -3.3     0.0     0.0     0.0
                                                  26.4%                 1326 LVermel2-138  1   -21.3     3.3    21.6
 1340  138  0   0.995     0.0     0.0    13.3     0.0     0.0     0.0
 Tapejara-138   -52.0     0.0     0.0     1.9     0.0     0.0     0.0
                                                   9.4%                 1326 LVermel2-138  1   -13.3    -1.9    13.5
 2050    1  0   1.016    11.0     0.0     1.0     0.0     0.0     0.0
 Bugres-----6   -62.3     0.0     0.0    -0.3     0.0     0.0     0.0
                                                  70.3%                 2058 Bugres----69  1    10.0     0.3     9.8
 2058   69  0   1.009     0.0     0.0     0.0     0.0     0.0     0.0
 Bugres----69   -66.0     0.0     0.0     0.0     0.0     0.0     0.0
                                                  70.8%                 2050 Bugres-----6  1   -10.0     0.4     9.9 0.993F
                                                  20.7%                 2063 Canastra--69  1    10.0    -0.4     9.9
 2061  138  0   1.018     0.0     0.0     7.2     0.0     0.0     0.0
 CruzAlta-138   -54.0     0.0     0.0    -1.3     0.0     0.0     0.0
                                                  42.5%                 1216 Jacui----138  1   -40.7    -8.1    40.8              23
                                                  63.3%                 1301 CruzAlta1-69  1    33.5     9.4    34.2 0.998*
 2063   69  0   1.007     0.0     0.0     0.0     0.0     0.0     0.0
 Canastra--69   -66.4     0.0     0.0     0.0     0.0     0.0     0.0
                                                  20.6%                 2058 Bugres----69  1   -10.0     0.3     9.9
                                                  23.6%                 2060 CanastrB-FIC  1     5.0    -0.2     5.0 1.000F        23
                                                  23.6%                 2062 CanastrA-FIC  1     5.0    -0.2     5.0 1.000F        23
 2065  138  0   1.008     0.0     0.0    36.2     0.0     0.0     0.0
 Canastr2-138   -68.5     0.0     0.0     5.4     0.0     0.0     0.0
                                                  33.6%                 2064 Canastra-138  1   -36.2    -5.4    36.3              23
```

```
 2068  138  0   1.020     0.0     0.0     9.4     0.0     0.0     0.0
 Cachoeir-138   -68.5     0.0     0.0     2.1     0.0     0.0     0.0
                                                66.9%                 1257 CInduPAl-138  1   -69.2   -25.3    72.3                 23
                                                10.9%                 2066 Cachoeir-FIC  1    -1.1    12.2    12.0 0.957F          23
                                                 5.6%                 2094 Taquara--138  1     5.1     2.0     5.4
                                                51.3%                 3003 SapucaiY-138  1    55.8     9.0    55.4                 31
CEPEL - CENTRO DE PESQUISAS DE ENERGIA ELETRICA - PROGRAMA DE ANALISE DE REDES - V08MAR05A                                PAG. 372

ANUAL 06/07 * SETEMBRO 2006 PESADA S/SE 19H N/NE 19H * ANAT0 - FSE - C13
RELATORIO COMPLETO DO SISTEMA * AREA 32 * *              RGE                *

X----------------- D A D O S  -  B A R R A ------------------------X------------ F L U X O S  -  C I R C U I T O S ------------X
 DA BARRA      TENSAO GERACAO INJ EQV  CARGA   ELO CC  SHUNT    MOTOR
 NUM. KV TIPO   MOD/     MW/     MW/     MW/     MW/   Mvar/     MW/
     NOME       ANG     Mvar    Mvar    Mvar    Mvar   EQUIV    Mvar  PARA BARRA                    FLUXOS
                                                FLUXO % SHUNT L         NUM.     NOME     NC     MW    Mvar  MVA/V_d   TAP  DEFAS TIE
X------------X-------X-------X-------X-------X-------X-------X-------X----X------------X--X-------X-------X-------X------X-----X---X

 2069  138  0   1.004     0.0     0.0    54.3     0.0     0.0     0.0
 Erechim1-138   -61.2     0.0     0.0    -1.1     0.0     0.0     0.0
                                                67.4%                 1042 PFundo---138  1   -55.4     2.3    55.3                 20
                                                14.1%                 1310 Erechim2-138  1    20.1    -1.2    20.1
                                                 1.9%                 1318 PaimFPCH-138  1   -19.0     0.0    18.9
 2079   69  0   1.049     0.0     0.0    13.8     0.0     0.0     0.0
 Missoes---69   -51.8     0.0     0.0     1.3     0.0     0.0     0.0
                                                26.4%                 2078 Missoes--230  1   -13.8    -1.3    13.2                 23
 2082  230  0   1.029     0.0     0.0    12.5     0.0     0.0     0.0
 CIAGrava-230   -65.0     0.0     0.0     5.0     0.0     0.0     0.0
                                                 4.0%                 1210 Gravata2-230  1   -12.5    -5.0    13.1                 23
 2092  138  0   1.013     0.0     0.0    19.1     0.0     0.0     0.0
 Parobe---138   -69.0     0.0     0.0     1.1     0.0     0.0     0.0
                                                17.0%                 2094 Taquara--138  1   -19.1    -1.1    18.9
 2094  138  0   1.014     0.0     0.0    29.7     0.0     0.0     0.0
 Taquara--138   -68.8     0.0     0.0     2.6     0.0     0.0     0.0
                                                47.2%                 1249 Taquara--230  1   -70.9   -11.3    70.8                 23
                                                 6.7%                 1290 3Coroas--138  1     2.2     6.2     6.5
                                                31.2%                 2055 SAPatrul-138  1    25.1     6.6    25.6                 70
                                                 7.2%                 2068 Cachoeir-138  1    -5.1    -4.7     6.9
                                                17.0%                 2092 Parobe---138  1    19.1     0.6    18.9
 2095   14  0   0.989     0.0     0.0    12.1     0.0     0.0     0.0
 PFundo----23   -60.3     0.0     0.0     0.3     0.0     0.0     0.0
                                                 SUP  102.0%                 1042 PFundo---138  1   -12.1    -0.3    12.2                 20
 2096  230  0   1.030     0.0     0.0    11.5     0.0     0.0     0.0
 Vipal----230   -63.4     0.0     0.0     3.0     0.0     0.0     0.0
                                                 5.1%                 1228 NPrata2--230  1   -11.5    -3.0    11.5                 23
 9279    1  0   1.001     0.0     0.0    22.8     0.0     0.0     0.0
 Caxias5-A-13   -68.3     0.0     0.0    -0.8     0.0     0.0     0.0
                                                45.6%                 1192 Caxias5--230  1   -22.8     0.8    22.8                 20
 9280    1  0   1.011     0.0     0.0     0.0     0.0     0.0     0.0
 Garibal1-FIC   -66.9     0.0     0.0     0.0     0.0     0.0     0.0
                                                51.4%                 1205 Garibaldi-69  1    43.1     0.1    42.6
                                                63.6%                 1206 Garibald-230  1   -53.3    -0.8    52.7                 23
                                                40.4%                 9286 GaribaldB-13  1    10.2     0.6    10.1
 9281    1  0   1.001     0.0     0.0    18.4     0.0     0.0     0.0
 Caxias2---13   -73.6     0.0     0.0    -7.5     0.0     0.0     0.0
                                                47.3%                 1201 Caxias2---69  1   -18.4     7.5    19.9
CEPEL - CENTRO DE PESQUISAS DE ENERGIA ELETRICA - PROGRAMA DE ANALISE DE REDES - V08MAR05A                                PAG. 373

ANUAL 06/07 * SETEMBRO 2006 PESADA S/SE 19H N/NE 19H * ANAT0 - FSE - C13
RELATORIO COMPLETO DO SISTEMA * AREA 32 * *              RGE                *
```

```
X----------------- D A D O S  -  B A R R A ------------------------X------------ F L U X O S  -  C I R C U I T O S ------------X
 DA BARRA      TENSAO GERACAO INJ EQV  CARGA   ELO CC  SHUNT    MOTOR
 NUM. KV TIPO   MOD/     MW/     MW/     MW/     MW/   Mvar/     MW/
     NOME       ANG     Mvar    Mvar    Mvar    Mvar   EQUIV    Mvar  PARA BARRA                    FLUXOS
                                                FLUXO % SHUNT L         NUM.     NOME     NC     MW    Mvar  MVA/V_d   TAP  DEFAS TIE
X------------X-------X-------X-------X-------X-------X-------X-------X----X------------X--X-------X-------X-------X------X-----X---X

 9282    1  0   1.001     0.0     0.0    22.8     0.0     0.0     0.0
 Caxias5-B-13   -68.3     0.0     0.0    -0.8     0.0     0.0     0.0
                                              45.6%                 1192 Caxias5--230  1   -22.8     0.8    22.8               20
 9284   14  0   1.001     0.0     0.0    24.8     0.0     0.0     0.0
 Grava2RGE-23   -70.0     0.0     0.0   -11.3     0.0     0.0     0.0
                                              67.8%                 1210 Gravata2-230  1   -32.8     8.7    33.9               23
                                               0.1%                 9212 Grava2AES-23  1     8.0     2.6     8.4               31
 9285   14  0   1.000     0.0     0.0    17.5     0.0     0.0     0.0
 StoAngelo-23   -58.0     0.0     0.0     3.5     0.0     0.0     0.0
                                              71.4%                 1251 StoAngelo-69  1   -17.5    -3.5    17.8
 9286    1  0   1.010     0.0     0.0    10.2     0.0     0.0     0.0
 GaribaldB-13   -67.6     0.0     0.0     0.5     0.0     0.0     0.0
                                              40.4%                 9280 Garibal1-FIC  1   -10.2    -0.5    10.1


TOTAIS DA AREA 32


X--------X--------X--------X--------X--------X--------X--------X--------X
  GERACAO  INJ EQV   CARGA   ELO CC    SHUNT   EXPORT   IMPORT   PERDAS
    MW/      MW/     MW/     MW/     Mvar/     MW/      MW/      MW/
   Mvar     Mvar     Mvar    Mvar     EQUIV    Mvar     Mvar     Mvar
X--------X--------X--------X--------X--------X--------X--------X--------X

     59.9      0.0   1299.5      0.0      0.0    107.6   1354.7      7.5
      9.8      0.0     73.2      0.0      0.0    104.9    160.6     -7.6
```





```
X----------------- D A D O S  -  B A R R A ------------------------X------------ F L U X O S  -  C I R C U I T O S ------------X
 DA BARRA      TENSAO GERACAO INJ EQV  CARGA   ELO CC  SHUNT    MOTOR
 NUM. KV TIPO   MOD/     MW/     MW/     MW/     MW/   Mvar/     MW/
     NOME       ANG     Mvar    Mvar    Mvar    Mvar   EQUIV    Mvar  PARA BARRA                    FLUXOS
                                                FLUXO % SHUNT L         NUM.     NOME     NC     MW    Mvar  MVA/V_d   TAP  DEFAS TIE
X------------X-------X-------X-------X-------X-------X-------X-------X----X------------X--X-------X-------X-------X------X-----X---X

  970  500  0   1.018     0.0     0.0     0.0     0.0     0.0     0.0
 Garabi-2-500     0.0     0.0     0.0     0.0     0.0     0.0     0.0                                 -85.8 SHL
                                               0.0%   -85.8         1040 CCC_BINF-1GR  1     0.0     0.0     0.0
  971  500  0   1.018     0.0     0.0     0.0     0.0     0.0     0.0
 Garabi-1-500     0.0     0.0     0.0     0.0     0.0     0.0     0.0                                 -85.8 SHL
                                               0.0%   -85.8         1040 CCC_BINF-1GR  1     0.0     0.0     0.0
  972  525  0   0.992     0.0     0.0     0.0     0.0     0.0     0.0
 Garabi-1-525   -51.7     0.0     0.0     0.0     0.0     0.0     0.0                                -224.1 SHL
                                               0.0%  -224.1         1045 SAngelo--525  1     0.0     0.0     0.0               20
  973  525  0   1.014     0.0     0.0     0.0     0.0     0.0     0.0
 Garabi-2-525   -50.7     0.0     0.0     0.0     0.0     0.0     0.0                                -275.3 SHL
                                               0.0%  -275.3          995 Ita------525  1     0.0     0.0     0.0               20
 1040  500  2   1.020     0.0     0.0     0.0     0.0     0.0     0.0
```

```
 CCC_BINF-1GR     0.0  -108.6     0.0     0.0     0.0     0.0     0.0
                                                 3.1%                 970 Garabi-2-500  1     0.0   -54.3    53.2
                                                 3.1%                 971 Garabi-1-500  1     0.0   -54.3    53.2


TOTAIS DA AREA 33


X--------X--------X--------X--------X--------X--------X--------X--------X
  GERACAO  INJ EQV   CARGA   ELO CC    SHUNT   EXPORT   IMPORT   PERDAS
    MW/      MW/      MW/      MW/     Mvar/     MW/      MW/      MW/
   Mvar     Mvar     Mvar     Mvar     EQUIV    Mvar     Mvar     Mvar
X--------X--------X--------X--------X--------X--------X--------X--------X

      0.0      0.0      0.0      0.0      0.0      0.0      0.2      0.3
   -108.6      0.0      0.0      0.0      0.0     66.9     45.6   -129.9
CEPEL - CENTRO DE PESQUISAS DE ENERGIA ELETRICA - PROGRAMA DE ANALISE DE REDES - V08MAR05A                                PAG. 375

ANUAL 06/07 * SETEMBRO 2006 PESADA S/SE 19H N/NE 19H * ANAT0 - FSE - C13
RELATORIO COMPLETO DO SISTEMA * AREA 34 * *         AES URUGUAIANA           *

X----------------- D A D O S  -  B A R R A -------------------------X------------ F L U X O S  -  C I R C U I T O S -------------X
 DA BARRA      TENSAO GERACAO INJ EQV  CARGA   ELO CC  SHUNT    MOTOR
 NUM. KV TIPO   MOD/     MW/     MW/     MW/     MW/   Mvar/     MW/
     NOME       ANG     Mvar    Mvar    Mvar    Mvar   EQUIV    Mvar  PARA BARRA                    FLUXOS
                                                FLUXO % SHUNT L         NUM.     NOME     NC     MW    Mvar  MVA/V_d   TAP  DEFAS TIE
X------------X-------X-------X-------X-------X-------X-------X-------X----X------------X--X-------X-------X-------X------X-----X---X

 1164    1  1   1.000   360.0     0.0     6.2     0.0     0.0     0.0
 URUGUAIG-2GR   -25.9    18.5     0.0     0.0     0.0     0.0     0.0
                                                88.6%                 1294 Uruguaia-230  1   353.7    18.5   354.2               23
 1165    1  1   1.000   180.0     0.0     3.7     0.0     0.0     0.0
 URUGUAIV-1GR   -28.7     2.9     0.0     0.0     0.0     0.0     0.0
                                                58.8%                 1294 Uruguaia-230  1   176.2     2.9   176.3               23


TOTAIS DA AREA 34


X--------X--------X--------X--------X--------X--------X--------X--------X
  GERACAO  INJ EQV   CARGA   ELO CC    SHUNT   EXPORT   IMPORT   PERDAS
    MW/      MW/      MW/      MW/     Mvar/     MW/      MW/      MW/
   Mvar     Mvar     Mvar     Mvar     EQUIV    Mvar     Mvar     Mvar
X--------X--------X--------X--------X--------X--------X--------X--------X

    540.0      0.0     10.0      0.0      0.0    530.0      0.0      0.0
     21.4      0.0      0.0      0.0      0.0     21.4      0.0      0.0
CEPEL - CENTRO DE PESQUISAS DE ENERGIA ELETRICA - PROGRAMA DE ANALISE DE REDES - V08MAR05A                                PAG. 376

ANUAL 06/07 * SETEMBRO 2006 PESADA S/SE 19H N/NE 19H * ANAT0 - FSE - C13
RELATORIO COMPLETO DO SISTEMA * AREA 35 * *            GRUPO REDE            *

X----------------- D A D O S  -  B A R R A -------------------------X------------ F L U X O S  -  C I R C U I T O S -------------X
 DA BARRA      TENSAO GERACAO INJ EQV  CARGA   ELO CC  SHUNT    MOTOR
 NUM. KV TIPO   MOD/     MW/     MW/     MW/     MW/   Mvar/     MW/
     NOME       ANG     Mvar    Mvar    Mvar    Mvar   EQUIV    Mvar  PARA BARRA                    FLUXOS
                                                FLUXO % SHUNT L         NUM.     NOME     NC     MW    Mvar  MVA/V_d   TAP  DEFAS TIE
X------------X-------X-------X-------X-------X-------X-------X-------X----X------------X--X-------X-------X-------X------X-----X---X
```

```
 3153    1  0   1.020     0.0     0.0    12.9     0.0     0.0     0.0
 UBARANA   69   -81.7     0.0     0.0     2.2     0.0     0.0     0.0
                                                53.4%                  672 UBARANA---69  1   -12.9    -2.2    12.8                06
 3154    1  0   1.013    17.0     0.0    54.3     0.0     0.0     0.0
 CATANDUVA138   -79.5     0.0     0.0    17.5     0.0     0.0     0.0
                                                42.4%                  638 CATAND-2-138  1   -37.3   -17.5    40.7                06
 3155    1  0   1.033     9.0     0.0    14.2     0.0     0.0     0.0
 BORBOREMA138   -78.7     0.0     0.0     5.0     0.0     0.0     0.0
                                                27.5%                  645 IBITINGA-138  1   -19.7   -11.4    22.0                06
                                                19.2%                 1914 N.HORIZ--138  1    14.5     6.4    15.3                06
 3156    1  0   1.028     0.0     0.0     0.0     0.0     0.0     0.0
 NHORIZONT138   -78.9     0.0     0.0     0.0     0.0     0.0     0.0
                                                 0.0%                 1914 N.HORIZ--138  1     0.0     0.0     0.0                06
 3157    1  0   1.030     0.0     0.0     0.0     0.0     0.0     0.0
 URUPES   138   -77.7     0.0     0.0     0.0     0.0     0.0     0.0
                                                26.7%                  638 CATAND-2-138  1    30.8     7.0    30.7                06
                                                26.7%                  661 PROMISSAO138  1   -30.8    -7.0    30.7                06
 3158    1  0   0.994     0.0     0.0    49.2     0.0     0.0     0.0
 BRAGAN€A 138  -101.9     0.0     0.0    15.3     0.0     0.0     0.0
                                                72.0%                  681 BRAGANCA-138  1   -49.2   -15.3    51.8                06
 3159    1  0   0.975     0.0     0.0    64.5     0.0     0.0     0.0
 STEREZINH138  -102.6     0.0     0.0    22.4     0.0     0.0     0.0
                                                31.7%                  679 Q.AMPAROY138  1     3.6    24.5    25.4                06
                                            SUP 106.0%                 681 BRAGANCA-138  1   -68.1   -46.9    84.8                06
 3160    1  0   1.050     0.0     0.0     8.7     0.0     0.0     0.0
 CAMBUI    69   -97.0     0.0     0.0     2.5     0.0     0.0     0.0
                                                 0.1%                 1504 ITAJU3-1-138  1    -8.7    -2.5     8.6                03
 3171    1  0   0.997     0.0     0.0    32.7     0.0     0.0     0.0
 PRUDENTEI 88   -67.7     0.0     0.0    13.1     0.0     0.0     0.0
                                                33.3%                  663 PPRUDENTE 88  1   -16.3    -6.5    17.7                06
                                                33.3%                  663 PPRUDENTE 88  2   -16.3    -6.5    17.7                06
 3172    1  0   0.993     0.0     0.0    24.5     0.0     0.0     0.0
 PRUDENTII138   -66.9     0.0     0.0     6.0     0.0     0.0     0.0
                                                58.1%                  659 PPRUDENTE138  1   -47.9    -7.1    48.8                06
                                                29.5%                 1919 ENEIDA-Y-138  1    23.4     1.1    23.6                06
 3173    1  0   0.983     0.0     0.0     9.1     0.0     0.0     0.0
 MARTINOPOL88   -66.7     0.0     0.0     2.8     0.0     0.0     0.0
                                                22.0%                 1921 MARTIN-Y--88  1    -9.1    -2.8     9.7                06
CEPEL - CENTRO DE PESQUISAS DE ENERGIA ELETRICA - PROGRAMA DE ANALISE DE REDES - V08MAR05A                                 PAG. 377

ANUAL 06/07 * SETEMBRO 2006 PESADA S/SE 19H N/NE 19H * ANAT0 - FSE - C13
RELATORIO COMPLETO DO SISTEMA * AREA 35 * *            GRUPO REDE          *

X----------------- D A D O S  -  B A R R A -------------------------X------------ F L U X O S  -  C I R C U I T O S ------------X
 DA BARRA      TENSAO GERACAO INJ EQV  CARGA   ELO CC  SHUNT    MOTOR
 NUM. KV TIPO   MOD/     MW/     MW/     MW/     MW/   Mvar/     MW/
     NOME       ANG     Mvar    Mvar    Mvar    Mvar   EQUIV    Mvar  PARA BARRA                   FLUXOS
                                                FLUXO % SHUNT L         NUM.     NOME     NC     MW    Mvar  MVA/V_d   TAP  DEFAS TIE
X------------X-------X-------X-------X-------X-------X-------X-------X----X------------X--X-------X-------X-------X------X-----X---X

 3174    1  0   0.947     0.0     0.0    15.4     0.0     0.0     0.0
 O CRUZ   138   -71.1     0.0     0.0     0.5     0.0     0.0     0.0
                                                60.6%                  640 FLORIDA--138  1   -52.4   -16.9    58.2                06
                                                 0.4%                 1920 BASTOS-Y-138  1    37.0    16.4    42.8                06
 3175    1  0   0.986     0.0     0.0     2.0     0.0     0.0     0.0
 ENEIDA   138   -67.7     0.0     0.0     0.3     0.0     0.0     0.0
                                                 0.0%                 1919 ENEIDA-Y-138  1    -2.0    -0.3     2.1                06
 3176    1  0   0.981     0.0     0.0    47.9     0.0     0.0     0.0
 PVENCESL 138   -65.1     0.0     0.0    11.9     0.0     0.0     0.0
```

```
                                                 88.9%                548 TAQUARUC-138  1   -69.6    -3.5    71.1              05
                                                 29.7%                639 DRACENA--138  1    21.7    -8.4    23.8              06
 3177    1  0   1.007     5.0     0.0    18.1     0.0     0.0     0.0
 ADAMANTINA69   -70.4     0.0     0.0     4.8     0.0     0.0     0.0
                                                 44.7%                642 FLORIDA   69  1   -13.1    -4.8    13.8              06
 3178  138  0   0.990     0.0     0.0    35.4     0.0     0.0     0.0
 PRP-P3/P5138   -67.0     0.0     0.0    14.2     0.0     0.0     0.0
                                                  0.4%                659 PPRUDENTE138  1   -35.4   -14.2    38.5              06
 3180    1  0   0.985     4.0     0.0     0.0     0.0     0.0     0.0
 UFLORESTA138   -68.0     0.0     0.0     0.0     0.0     0.0     0.0
                                                  0.0%               1918 FLOREST-Y138  1     4.0     0.0     4.1              06
 3190    1  0   0.929     0.0     0.0    10.9     0.0     0.0     0.0
 BASTOS   138   -72.2     0.0     0.0     5.7     0.0     0.0     0.0
                                                  0.1%               1920 BASTOS-Y-138  1   -10.9    -5.7    13.2              06
 3191    1  0   0.913     0.0     0.0    25.5     0.0     0.0     0.0
 TUPA     138   -73.1     0.0     0.0    11.9     0.0     0.0     0.0
                                                  0.3%               1920 BASTOS-Y-138  1   -25.5   -11.9    30.8              06
 3192    1  0   1.043    14.0     0.0    32.8     0.0     0.0     0.0
 ASSIS I   88   -67.9     0.0     0.0    12.4     0.0     0.0     0.0
                                                 57.1%                554 ASSIS-----88  1   -20.4   -16.4    25.1              06
                                                  9.1%               3198 PALMITAL  88  1     1.6     4.0     4.2
 3193    1  0   1.029     0.0     0.0    14.6     0.0     0.0     0.0
 ASSIS III 88   -67.8     0.0     0.0     5.9     0.0     0.0     0.0
                                                 34.8%               2008 ASSIS3-Y--88  1   -14.6    -5.9    15.3              06
 3194    1  0   1.021     0.0     0.0    15.0     0.0     0.0     0.0
 PARAGUA€U 88   -64.9     0.0     0.0     4.8     0.0     0.0     0.0
                                                 35.1%               2006 PARPTA-Y--88  1   -15.0    -4.8    15.4              06
CEPEL - CENTRO DE PESQUISAS DE ENERGIA ELETRICA - PROGRAMA DE ANALISE DE REDES - V08MAR05A                                PAG. 378

ANUAL 06/07 * SETEMBRO 2006 PESADA S/SE 19H N/NE 19H * ANAT0 - FSE - C13
RELATORIO COMPLETO DO SISTEMA * AREA 35 * *           GRUPO REDE           *

X----------------- D A D O S  -  B A R R A ------------------------X------------ F L U X O S  -  C I R C U I T O S ------------X
 DA BARRA      TENSAO GERACAO INJ EQV  CARGA   ELO CC  SHUNT    MOTOR
 NUM. KV TIPO   MOD/     MW/     MW/     MW/     MW/   Mvar/     MW/
     NOME       ANG     Mvar    Mvar    Mvar    Mvar   EQUIV    Mvar  PARA BARRA                    FLUXOS
                                                FLUXO % SHUNT L         NUM.     NOME     NC      MW    Mvar  MVA/V_d   TAP  DEFAS TIE
X------------X-------X-------X-------X-------X-------X-------X-------X----X------------X--X-------X-------X-------X------X-----X---X

 3195    1  0   1.016     0.0     0.0     4.2     0.0     0.0     0.0
 STA LINA  88   -65.1     0.0     0.0     1.7     0.0     0.0     0.0
                                                 10.1%               2007 S.LINA-Y--88  1    -4.2    -1.7     4.5              06
 3196    1  0   0.974     0.0     0.0    17.2     0.0     0.0     0.0
 RANCHARIA 88   -64.8     0.0     0.0     6.0     0.0     0.0     0.0
                                                 42.5%               1922 RANCHA-Y--88  1   -17.2    -6.0    18.7              06
 3197    1  0   1.039     0.0     0.0     9.3     0.0     0.0     0.0
 C MOTA    88   -66.7     0.0     0.0     3.9     0.0     0.0     0.0
                                                 68.8%                555 CANOAS-1--88  1   -30.7     7.1    30.3              05
                                                 52.5%                613 SALTOGRD-088  1    21.4   -11.0    23.1              05
 3198    1  0   1.038     0.0     0.0     8.4     0.0     0.0     0.0
 PALMITAL  88   -67.9     0.0     0.0     2.5     0.0     0.0     0.0
                                                 10.1%               3192 ASSIS I   88  1    -1.6    -4.5     4.7
                                                 14.8%               3199 IBIRAREMA 88  1    -6.8     2.0     6.8
 3199    1  0   1.038     0.0     0.0     5.8     0.0     0.0     0.0
 IBIRAREMA 88   -67.5     0.0     0.0     2.8     0.0     0.0     0.0
                                                 27.6%                557 CANOAS-2--88  1   -12.6    -0.4    12.1              05
                                                 15.1%               3198 PALMITAL  88  1     6.8    -2.4     6.9
```

TOTAIS DA AREA 35

| GERACAO MW/ Mvar | INJ EQV MW/ Mvar | CARGA MW/ Mvar | ELO CC MW/ Mvar | SHUNT Mvar/ EQUIV | EXPORT MW/ Mvar | IMPORT MW/ Mvar | PERDAS MW/ Mvar |
|---|---|---|---|---|---|---|---|
| 49.0 | 0.0 | 532.6 | 0.0 | 0.0 | 156.1 | 643.9 | 4.2 |
| 0.0 | 0.0 | 176.1 | 0.0 | 0.0 | 62.4 | 237.0 | -1.5 |



ANUAL 06/07 * SETEMBRO 2006 PESADA S/SE 19H N/NE 19H * ANAT0 - FSE - C13
RELATORIO COMPLETO DO SISTEMA * AREA 36 * * GRUPO PAULISTA *

| DADOS - BARRA | | | | | | | | FLUXOS - CIRCUITOS | | | | | | | |
|---|---|---|---|---|---|---|---|---|---|---|---|---|---|---|---|
| DA BARRA NUM. KV TIPO NOME | TENSAO MOD/ ANG | GERACAO MW/ Mvar | INJ EQV MW/ Mvar | CARGA MW/ Mvar | ELO CC MW/ Mvar FLUXO % | SHUNT Mvar/ EQUIV SHUNT L | MOTOR MW/ Mvar | PARA BARRA NUM. | NOME | NC | MW | FLUXOS Mvar | MVA/V_d | TAP | DEFAS TIE |
| 3125 1 0 | 1.040 | 1.7 | 0.0 | 46.9 | 0.0 | 0.0 | 0.0 | | | | | | | | |
| ITAPETININ-2 | -98.8 | -0.2 | 0.0 | 10.5 | 0.0 | 0.0 | 0.0 | | | | | | | | |
| | | | | | 0.4% | | | 741 | ITAPETI2-138 | 1 | -45.2 | -10.7 | 44.7 | | 06 |
| 3126 1 0 | 0.985 | 0.0 | 0.0 | 15.6 | 0.0 | 0.0 | 0.0 | | | | | | | | |
| ITAPETININ-1 | -100.4 | 0.0 | 0.0 | 2.9 | 0.0 | 0.0 | 0.0 | | | | | | | | |
| | | | | | 31.6% | | | 742 | ITAPETI2-088 | 1 | -15.6 | -2.9 | 16.1 | | 06 |
| 3127 1 0 | 1.038 | 0.0 | 0.0 | 7.0 | 0.0 | 0.0 | 0.0 | | | | | | | | |
| DURATEX----- | -98.8 | 0.0 | 0.0 | 2.7 | 0.0 | 0.0 | 0.0 | | | | | | | | |
| | | | | | 0.1% | | | 2026 | DURATEX-Y138 | 1 | -7.0 | -2.7 | 7.2 | | 06 |
| 3130 1 0 | 1.018 | 0.9 | 0.0 | 38.1 | 0.0 | 0.0 | 0.0 | | | | | | | | |
| MOCOCA------ | -94.5 | 0.0 | 0.0 | 10.5 | 0.0 | 0.0 | 0.0 | | | | | | | | |
| | | | | | 0.4% | | | 1986 | MOCOCA-Y-138 | 1 | -37.2 | -10.5 | 38.0 | | 06 |
| 3131 1 0 | 1.039 | 0.0 | 0.0 | 10.1 | 0.0 | 0.0 | 0.0 | | | | | | | | |
| CACONDE----- | -92.6 | 0.0 | 0.0 | 3.9 | 0.0 | 0.0 | 0.0 | | | | | | | | |
| | | | | | 0.1% | | | 683 | CACONDE--138 | 1 | -10.1 | -3.9 | 10.4 | | 06 |
| 3132 1 0 | 1.013 | 0.0 | 0.0 | 14.5 | 0.0 | 0.0 | 0.0 | | | | | | | | |
| CASABRANCA-- | -94.8 | 0.0 | 0.0 | 2.9 | 0.0 | 0.0 | 0.0 | | | | | | | | |
| | | | | | 18.2% | | | 1941 | CBRANCA-Y138 | 1 | -14.5 | -2.9 | 14.6 | | 06 |
| 3133 1 0 | 1.028 | 10.4 | 0.0 | 29.3 | 0.0 | 0.0 | 0.0 | | | | | | | | |
| SJRIOPARDO-- | -93.7 | 4.5 | 0.0 | 4.7 | 0.0 | 0.0 | 0.0 | | | | | | | | |
| | | | | | 0.2% | | | 2003 | SJRPARD-Y138 | 1 | -18.9 | -0.2 | 18.4 | | 06 |
| 3135 1 0 | 0.921 | 0.5 | 0.0 | 34.8 | 0.0 | 0.0 | 0.0 | | | | | | | | |
| PEDREIRA---- | -104.9 | 0.3 | 0.0 | 9.6 | 0.0 | 0.0 | 0.0 | | | | | | | | |
| | | | | | 0.4% | | | 1958 | PEDREIRA-CJE | 1 | -34.3 | -9.3 | 38.6 | | 06 |
| 3136 1 0 | 0.927 | 0.0 | 0.0 | 20.8 | 0.0 | 0.0 | 0.0 | | | | | | | | |
| JAGUARIUNA-- | -104.3 | 0.0 | 0.0 | 7.0 | 0.0 | 0.0 | 0.0 | | | | | | | | |
| | | | | | 29.6% | | | 1968 | JAGRIUN-Y138 | 1 | -20.8 | -7.0 | 23.7 | | 06 |
| 3137 1 0 | 0.927 | 0.0 | 0.0 | 16.7 | 0.0 | 0.0 | 0.0 | | | | | | | | |
| JAG-ANTARTIC | -104.3 | 0.0 | 0.0 | 5.1 | 0.0 | 0.0 | 0.0 | | | | | | | | |
| | | | | | 23.6% | | | 1968 | JAGRIUN-Y138 | 1 | -16.7 | -5.1 | 18.8 | | 06 |
| 3138 138 0 | 0.927 | 0.0 | 0.0 | 7.0 | 0.0 | 0.0 | 0.0 | | | | | | | | |
| HOLAMBRA-138 | -104.4 | 0.0 | 0.0 | 2.3 | 0.0 | 0.0 | 0.0 | | | | | | | | |
| | | | | | 0.1% | | | 1968 | JAGRIUN-Y138 | 1 | -7.0 | -2.3 | 8.0 | | 06 |



ANUAL 06/07 * SETEMBRO 2006 PESADA S/SE 19H N/NE 19H * ANAT0 - FSE - C13

TOTAIS DA AREA 36

| GERACAO MW/ Mvar | INJ EQV MW/ Mvar | CARGA MW/ Mvar | ELO CC MW/ Mvar | SHUNT Mvar/ EQUIV | EXPORT MW/ Mvar | IMPORT MW/ Mvar | PERDAS MW/ Mvar |
|---|---|---|---|---|---|---|---|
| 13.5 | 0.0 | 240.8 | 0.0 | 0.0 | 0.0 | 227.3 | 0.0 |
| 4.6 | 0.0 | 62.1 | 0.0 | 0.0 | 0.0 | 57.5 | 0.0 |



ANUAL 06/07 * SETEMBRO 2006 PESADA S/SE 19H N/NE 19H * ANAT0 - FSE - C13
RELATORIO COMPLETO DO SISTEMA * AREA 37 * * SANTA CRUZ *

| DADOS - BARRA | | | | | | | | | FLUXOS - CIRCUITOS | | | | | | | | |
|---|---|---|---|---|---|---|---|---|---|---|---|---|---|---|---|---|---|
| DA BARRA NUM. KV TIPO NOME | TENSAO MOD/ ANG | GERACAO MW/ Mvar | INJ EQV MW/ Mvar | CARGA MW/ Mvar | ELO CC MW/ Mvar FLUXO % | SHUNT Mvar/ EQUIV SHUNT L | MOTOR MW/ Mvar | PARA BARRA NUM. | NOME | NC | MW | FLUXOS Mvar | MVA/V_d | TAP | DEFAS | TIE |
| 3140 88 0 | 1.022 | 0.0 | 0.0 | 12.8 | 0.0 | 0.0 | 0.0 | | | | | | | | | |
| OURINHO-2-88 | -74.1 | 0.0 | 0.0 | 3.6 | 0.0 | 0.0 | 0.0 | | | | | | | | | |
| | | | | | 48.6% | | | 2043 | OURIN-2-Y-88 | 1 | -42.6 | -9.8 | 42.7 | | | 06 |
| | | | | | 42.5% | | | 3141 | OURINHO-2-66 | 1 | 14.9 | 3.1 | 14.9 | 1.000F | | |
| | | | | | 42.5% | | | 3141 | OURINHO-2-66 | 2 | 14.9 | 3.1 | 14.9 | 1.000F | | |
| 3141 1 0 | 1.008 | 0.0 | 0.0 | 18.0 | 0.0 | 0.0 | 0.0 | | | | | | | | | |
| OURINHO-2-66 | -78.8 | 0.0 | 0.0 | 5.2 | 0.0 | 0.0 | 0.0 | | | | | | | | | |
| | | | | | 42.5% | | | 3140 | OURINHO-2-88 | 1 | -14.9 | -1.8 | 14.9 | | | |
| | | | | | 42.5% | | | 3140 | OURINHO-2-88 | 2 | -14.9 | -1.8 | 14.9 | | | |
| | | | | | 49.0% | | | 3143 | CHAVANTES-66 | 1 | 11.8 | -1.5 | 11.8 | | | |
| 3142 1 0 | 1.011 | 0.0 | 0.0 | 19.4 | 0.0 | 0.0 | 0.0 | | | | | | | | | |
| B.CAMPOS--66 | -81.8 | 0.0 | 0.0 | 7.3 | 0.0 | 0.0 | 0.0 | | | | | | | | | |
| | | | | | 15.4% | | | 3145 | PIRAJU----66 | 1 | 2.1 | 3.1 | 3.7 | | | |
| | | | | | 78.7% | | | 3146 | B.CAMPOS--88 | 1 | -21.5 | -10.4 | 23.6 | | | |
| 3143 1 0 | 0.998 | 0.0 | 0.0 | 3.9 | 0.0 | 0.0 | 0.0 | | | | | | | | | |
| CHAVANTES-66 | -80.2 | 0.0 | 0.0 | 1.1 | 0.0 | 0.0 | 0.0 | | | | | | | | | |
| | | | | | 48.9% | | | 3141 | OURINHO-2-66 | 1 | -11.6 | 1.5 | 11.7 | | | |
| | | | | | 34.0% | | | 3144 | IPAUSSU---66 | 1 | 7.7 | -2.6 | 8.2 | | | |
| 3144 1 0 | 0.997 | 0.0 | 0.0 | 3.3 | 0.0 | 0.0 | 0.0 | | | | | | | | | |
| IPAUSSU---66 | -80.6 | 0.0 | 0.0 | 1.0 | 0.0 | 0.0 | 0.0 | | | | | | | | | |
| | | | | | 33.9% | | | 3143 | CHAVANTES-66 | 1 | -7.7 | 2.6 | 8.1 | | | |
| | | | | | 23.6% | | | 3145 | PIRAJU----66 | 1 | 4.4 | -3.6 | 5.7 | | | |
| 3145 1 1 | 1.000 | 22.0 | 0.0 | 28.4 | 0.0 | 0.0 | 0.0 | | | | | | | | | |
| PIRAJU----66 | -81.8 | 8.0 | 0.0 | 8.2 | 0.0 | 0.0 | 0.0 | | | | | | | | | |
| | | | | | 16.5% | | | 3142 | B.CAMPOS--66 | 1 | -2.1 | -3.4 | 3.9 | | | |
| | | | | | 22.4% | | | 3144 | IPAUSSU---66 | 1 | -4.3 | 3.2 | 5.4 | | | |
| 3146 88 0 | 1.017 | 0.0 | 0.0 | 0.0 | 0.0 | 0.0 | 0.0 | | | | | | | | | |
| B.CAMPOS--88 | -81.1 | 0.0 | 0.0 | 0.0 | 0.0 | 0.0 | 0.0 | | | | | | | | | |
| | | | | | 78.7% | | | 2036 | BCAMPOS-Y-88 | 1 | -21.5 | -10.7 | 23.6 | | | 06 |
| | | | | | 78.7% | | | 3142 | B.CAMPOS--66 | 1 | 21.5 | 10.7 | 23.6 | | | |
| 3147 138 0 | 1.025 | 0.0 | 0.0 | 24.6 | 0.0 | 0.0 | 0.0 | | | | | | | | | |
| ITAI-2---138 | -89.9 | 0.0 | 0.0 | 5.0 | 0.0 | 0.0 | 0.0 | | | | | | | | | |
| | | | | | 45.4% | | | 2028 | ITAI-Y---138 | 1 | -24.6 | -5.0 | 24.5 | | | 06 |
| 3148 88 0 | 1.019 | 0.0 | 0.0 | 25.1 | 0.0 | 0.0 | 0.0 | | | | | | | | | |
| OURINHO-1-88 | -74.0 | 0.0 | 0.0 | 7.3 | 0.0 | 0.0 | 0.0 | | | | | | | | | |

```
                                                  53.4%                 2045 OURIN-1-Y-88  1   -25.1    -7.3    25.6              06
 3150  230  0   1.026     1.0     0.0    32.6     0.0     0.0     0.0
 AVARE----230   -84.6     0.2     0.0     6.6     0.0     0.0     0.0
                                                  21.0%                  629 AVARE----230  1   -31.6    -6.4    31.4              05
CEPEL - CENTRO DE PESQUISAS DE ENERGIA ELETRICA - PROGRAMA DE ANALISE DE REDES - V08MAR05A                                PAG. 382

ANUAL 06/07 * SETEMBRO 2006 PESADA S/SE 19H N/NE 19H * ANAT0 - FSE - C13


TOTAIS DA AREA 37


X--------X--------X--------X--------X--------X--------X--------X--------X
  GERACAO  INJ EQV   CARGA   ELO CC    SHUNT   EXPORT   IMPORT   PERDAS
    MW/      MW/      MW/     MW/     Mvar/     MW/      MW/      MW/
   Mvar     Mvar     Mvar    Mvar     EQUIV    Mvar     Mvar     Mvar
X--------X--------X--------X--------X--------X--------X--------X--------X

     23.0      0.0    168.1      0.0      0.0      0.0    145.4      0.3
      8.2      0.0     45.3      0.0      0.0      0.0     39.3      2.2
CEPEL - CENTRO DE PESQUISAS DE ENERGIA ELETRICA - PROGRAMA DE ANALISE DE REDES - V08MAR05A                                PAG. 383

ANUAL 06/07 * SETEMBRO 2006 PESADA S/SE 19H N/NE 19H * ANAT0 - FSE - C13
RELATORIO COMPLETO DO SISTEMA * AREA 38 * *           COPEL-GERACAO          *

X----------------- D A D O S  -  B A R R A ------------------------X------------ F L U X O S  -  C I R C U I T O S ------------X
 DA BARRA      TENSAO GERACAO INJ EQV  CARGA   ELO CC  SHUNT    MOTOR
 NUM. KV TIPO   MOD/     MW/     MW/     MW/     MW/   Mvar/     MW/
     NOME       ANG     Mvar    Mvar    Mvar    Mvar   EQUIV    Mvar  PARA BARRA                    FLUXOS
                                                FLUXO % SHUNT L         NUM.     NOME     NC     MW    Mvar  MVA/V_d   TAP  DEFAS TIE
X------------X-------X-------X-------X-------X-------X-------X-------X----X------------X--X-------X-------X-------X------X-----X---X

  800    1  1   0.980  1525.0     0.0     1.2     0.0     0.0     0.0
 GBMUNHOZ-4GR   -46.1   -18.2     0.0     0.0     0.0     0.0     0.0
                                                  92.8%                  824 GBMunhoz-525  1  1523.8   -18.2  1555.0              21
  801    1 -1   0.990     0.0     0.0     0.0     0.0     0.0     0.0
 GBMUNHOZ-000   -53.6     0.0     0.0     0.0     0.0     0.0     0.0
                                                   0.0%                  824 GBMunhoz-525  1     0.0     0.0     0.0              21
  804    1  1   1.000   234.0     0.0     1.2     0.0     0.0     0.0
 GPSOUZA--4GR   -66.8    48.0     0.0     0.0     0.0     0.0     0.0
                                                  94.3%                  817 GPSouza--230  1   232.8    48.0   237.7              21
  805    1 -1   0.983     0.0     0.0     0.0     0.0     0.0     0.0
 GPSOUZA--000   -73.3     0.0     0.0     0.0     0.0     0.0     0.0
                                                   0.0%                  817 GPSouza--230  1     0.0     0.0     0.0              21
  808    1  1   0.980  1200.0     0.0     2.4     0.0     0.0     0.0
 SCAXIAS--4GR   -40.5   -82.6     0.0     0.0     0.0     0.0     0.0
                                                  91.1%                  897 SCaxias--525  1  1197.6   -82.6  1224.9              21
  809    1 -1   0.996     0.0     0.0     0.0     0.0     0.0     0.0
 SCAXIAS--000   -47.7     0.0     0.0     0.0     0.0     0.0     0.0
                                                   0.0%                  897 SCaxias--525  1     0.0     0.0     0.0              21
  810    1  1   0.980  1134.0     0.0     2.4     0.0     0.0     0.0
 GNBRAGA--4GR   -42.9  -226.5     0.0     0.0     0.0     0.0     0.0
                                                  93.5%                  856 SSegredo-525  1  1131.6  -226.5  1177.6              21
  811    1 -1   1.012     0.0     0.0     0.0     0.0     0.0     0.0
 GNBRAGA--000   -49.8     0.0     0.0     0.0     0.0     0.0     0.0
                                                   0.0%                  856 SSegredo-525  1     0.0     0.0     0.0              21
```

TOTAIS DA AREA 38

| GERACAO MW/ Mvar | INJ EQV MW/ Mvar | CARGA MW/ Mvar | ELO CC MW/ Mvar | SHUNT Mvar/ EQUIV | EXPORT MW/ Mvar | IMPORT MW/ Mvar | PERDAS MW/ Mvar |
|---|---|---|---|---|---|---|---|
| 4093.0 | 0.0 | 7.2 | 0.0 | 0.0 | 4085.8 | 0.0 | 0.0 |
| -279.3 | 0.0 | 0.0 | 0.0 | 0.0 | 48.0 | 327.3 | 0.0 |



ANUAL 06/07 * SETEMBRO 2006 PESADA S/SE 19H N/NE 19H * ANAT0 - FSE - C13
RELATORIO COMPLETO DO SISTEMA * AREA 39 * * DEMAIS AGENTES S/MS *

| DADOS - BARRA | | | | | | | | FLUXOS - CIRCUITOS | | | | | | | |
|---|---|---|---|---|---|---|---|---|---|---|---|---|---|---|---|
| DA BARRA NUM. KV TIPO NOME | TENSAO MOD/ ANG | GERACAO MW/ Mvar | INJ EQV MW/ Mvar | CARGA MW/ Mvar | ELO CC MW/ Mvar | SHUNT Mvar/ EQUIV | MOTOR MW/ Mvar | PARA BARRA NUM. | NOME | NC | MW | FLUXOS Mvar | MVA/V_d | TAP | DEFAS TIE |
| | | | | | FLUXO % | SHUNT L | | | | | | | | | |
| 802 1 -1 | 1.037 | 0.0 | 0.0 | 0.0 | 0.0 | 0.0 | 0.0 | | | | | | | | |
| ARAUCARG-000 | -73.2 | 0.0 | 0.0 | 0.0 | 0.0 | 0.0 | 0.0 | | | | | | | | |
| | | | | | 0.0% | | | 813 | GralhAzu-230 | 1 | 0.0 | 0.0 | 0.0 | | 21 |
| 803 1 -1 | 1.037 | 0.0 | 0.0 | 0.0 | 0.0 | 0.0 | 0.0 | | | | | | | | |
| ARAUCARV-000 | -73.2 | 0.0 | 0.0 | 0.0 | 0.0 | 0.0 | 0.0 | | | | | | | | |
| | | | | | 0.0% | | | 813 | GralhAzu-230 | 1 | 0.0 | 0.0 | 0.0 | | 21 |
| 806 1 1 | 1.000 | 108.0 | 0.0 | 0.0 | 0.0 | 0.0 | 0.0 | | | | | | | | |
| StaClara-2GR | -43.5 | -7.2 | 0.0 | 0.0 | 0.0 | 0.0 | 0.0 | | | | | | | | |
| | | | | | 80.8% | | | 807 | StaClara-138 | 1 | 108.0 | -7.2 | 108.2 | | |
| 807 138 0 | 1.004 | 0.0 | 0.0 | 0.0 | 0.0 | 0.0 | 0.0 | | | | | | | | |
| StaClara-138 | -46.2 | 0.0 | 0.0 | 0.0 | 0.0 | 0.0 | 0.0 | | | | | | | | |
| | | | | | 80.8% | | | 806 | StaClara-2GR | 1 | -108.0 | 12.5 | 108.2 | 1.000F | |
| | | | | | 47.1% | | | 825 | Guarapua-138 | 1 | 81.6 | -11.2 | 82.0 | | 22 |
| | | | | | 38.5% | | | 837 | VilaCarl-138 | 1 | 66.3 | -11.9 | 67.0 | | 22 |
| | | | | | 18.2% | | | 2476 | Fundao---138 | 1 | -39.9 | 10.7 | 41.1 | | |
| 1152 1 -1 | 1.030 | 0.0 | 0.0 | 0.0 | 0.0 | 0.0 | 0.0 | | | | | | | | |
| CANOAS---000 | -64.9 | 0.0 | 0.0 | 0.0 | 0.0 | 0.0 | 0.0 | | | | | | | | |
| | | | | | 0.0% | | | 1248 | Canoas2--230 | 1 | 0.0 | 0.0 | 0.0 | | 23 |
| 1163 230 0 | 1.025 | 0.0 | 0.0 | 0.0 | 0.0 | 0.0 | 0.0 | | | | | | | | |
| LageaGde-230 | -67.8 | 0.0 | 0.0 | 0.0 | 0.0 | 0.0 | 0.0 | | | | | | | | |
| | | | | | 32.6% | | | 1057 | Sideropo-230 | 1 | 111.1 | -6.3 | 108.5 | | 20 |
| | | | | | 24.2% | | | 1192 | Caxias5--230 | 1 | -82.1 | 8.8 | 80.6 | | 20 |
| | | | | | 13.3% | | | 1287 | PassMeio-230 | 1 | -29.0 | -2.6 | 28.3 | | |
| 1176 1 1 | 1.020 | 113.0 | 0.0 | 0.0 | 0.0 | 0.0 | 0.0 | | | | | | | | |
| DFRANCIS-2GR | -44.9 | 1.9 | 0.0 | 0.0 | 0.0 | 0.0 | 0.0 | | | | | | | | |
| | | | | | 80.3% | | | 1223 | DFrancis-230 | 1 | 113.0 | 1.9 | 110.8 | | 23 |
| 1177 1 -1 | 1.023 | 0.0 | 0.0 | 0.0 | 0.0 | 0.0 | 0.0 | | | | | | | | |
| DFRANCIS-000 | -50.2 | 0.0 | 0.0 | 0.0 | 0.0 | 0.0 | 0.0 | | | | | | | | |
| | | | | | 0.0% | | | 1223 | DFrancis-230 | 1 | 0.0 | 0.0 | 0.0 | | 23 |
| 1287 230 0 | 1.027 | 0.0 | 0.0 | 0.0 | 0.0 | 0.0 | 0.0 | | | | | | | | |
| PassMeio-230 | -67.5 | 0.0 | 0.0 | 0.0 | 0.0 | 0.0 | 0.0 | | | | | | | | |
| | | | | | 13.3% | | | 1163 | LageaGde-230 | 1 | 29.0 | -1.1 | 28.3 | | |
| | | | | | 85.6% | | | 1288 | PassoMeio-13 | 1 | -29.0 | 1.1 | 28.3 | 1.000F | |
| 1288 1 -1 | 1.026 | 29.0 | 0.0 | 0.0 | 0.0 | 0.0 | 0.0 | | | | | | | | |
| PassoMeio-13 | -65.3 | 0.0 | 0.0 | 0.0 | 0.0 | 0.0 | 0.0 | | | | | | | | |
| | | | | | 85.6% | | | 1287 | PassMeio-230 | 1 | 29.0 | 0.0 | 28.3 | | |

```
ANUAL 06/07 * SETEMBRO 2006 PESADA S/SE 19H N/NE 19H * ANAT0 - FSE - C13
RELATORIO COMPLETO DO SISTEMA * AREA 39 * *      DEMAIS AGENTES S/MS         *

X----------------- D A D O S  -  B A R R A -------------------------X------------ F L U X O S  -  C I R C U I T O S ------------X
 DA BARRA      TENSAO GERACAO INJ EQV  CARGA   ELO CC  SHUNT    MOTOR
 NUM. KV TIPO   MOD/     MW/     MW/     MW/     MW/   Mvar/     MW/
     NOME       ANG     Mvar    Mvar    Mvar    Mvar   EQUIV    Mvar  PARA BARRA                    FLUXOS
                                                FLUXO % SHUNT L         NUM.     NOME     NC     MW    Mvar  MVA/V_d   TAP  DEFAS TIE
X------------X-------X-------X-------X-------X-------X-------X-------X----X------------X--X-------X-------X-------X------X-----X---X

 2475    1  1   1.000   108.0     0.0     0.0     0.0     0.0     0.0
 Fundao---2GR   -42.5    -4.6     0.0     0.0     0.0     0.0     0.0
                                                80.7%                   2476 Fundao---138  1   108.0    -4.6   108.1
 2476  138 -1   1.003    60.0     0.0     0.0     0.0     0.0     0.0
 Fundao---138   -45.2   -31.5     0.0     0.0     0.0     0.0     0.0
                                                18.3%                    807 StaClara-138  1    40.0   -10.9    41.4
                                                58.0%                   2454 CSegredo-138  1   128.0   -30.4   131.1              22
                                                80.7%                   2475 Fundao---2GR  1  -108.0     9.8   108.1 1.000F
 2836    1  1   1.000   109.0     0.0     0.0     0.0     0.0     0.0
 QQUEIXO--3GR   -51.2   -13.9     0.0     0.0     0.0     0.0     0.0
                                                73.3%                   2838 QQueixo--138  1   109.0   -13.9   109.9 1.000F
 2838  138  0   1.015     0.0     0.0     0.0     0.0     0.0     0.0
 QQueixo--138   -56.8     0.0     0.0     0.0     0.0     0.0     0.0
                                                36.4%                   2832 Pinhalzi-138  1    54.3   -12.4    54.9              25
                                                36.4%                   2832 Pinhalzi-138  2    54.3   -12.4    54.9              25
                                                73.3%                   2836 QQUEIXO--3GR  1  -108.7    24.8   109.9


TOTAIS DA AREA 39


X--------X--------X--------X--------X--------X--------X--------X--------X
  GERACAO  INJ EQV   CARGA   ELO CC    SHUNT   EXPORT   IMPORT   PERDAS
    MW/      MW/      MW/      MW/     Mvar/     MW/      MW/      MW/
   Mvar     Mvar     Mvar     Mvar     EQUIV    Mvar     Mvar     Mvar
X--------X--------X--------X--------X--------X--------X--------X--------X

    527.0      0.0      0.0      0.0      0.0    607.3     83.0      2.7
    -55.3      0.0      0.0      0.0      0.0     18.2     90.6     17.2
CEPEL - CENTRO DE PESQUISAS DE ENERGIA ELETRICA - PROGRAMA DE ANALISE DE REDES - V08MAR05A                                PAG. 386

ANUAL 06/07 * SETEMBRO 2006 PESADA S/SE 19H N/NE 19H * ANAT0 - FSE - C13
RELATORIO COMPLETO DO SISTEMA * AREA 41 * * PRODUTORES INDEPENDENTES - SE/CO *

X----------------- D A D O S  -  B A R R A -------------------------X------------ F L U X O S  -  C I R C U I T O S ------------X
 DA BARRA      TENSAO GERACAO INJ EQV  CARGA   ELO CC  SHUNT    MOTOR
 NUM. KV TIPO   MOD/     MW/     MW/     MW/     MW/   Mvar/     MW/
     NOME       ANG     Mvar    Mvar    Mvar    Mvar   EQUIV    Mvar  PARA BARRA                    FLUXOS
                                                FLUXO % SHUNT L         NUM.     NOME     NC     MW    Mvar  MVA/V_d   TAP  DEFAS TIE
X------------X-------X-------X-------X-------X-------X-------X-------X----X------------X--X-------X-------X-------X------X-----X---X

  269    1  1   1.000   181.0     0.0     0.0     0.0     0.0     0.0
 CTE-CSN--2GR  -105.8   -23.5     0.0     0.0     0.0     0.0     0.0
                                                 1.8%                   3972 CSN-CONS.INT  1   181.0   -23.5   182.5 1.054F
  477    1  0   1.025     0.0     0.0   106.0     0.0     0.0     0.0
 CARBOCL--230   -90.9     0.0     0.0    21.5     0.0     0.0     0.0
                                                11.1%                    472 BAIXADA--230  1   -68.5   -10.9    67.7              04
                                                 5.4%                    480 H.BORDEN-230  1   -37.5   -10.6    38.0              27
```

```
 607    1  0   0.986     0.0     0.0   458.0     0.0     0.0     0.0
CBA-2----230   -97.9     0.0     0.0   135.6     0.0     0.0     0.0
                                          4.8%                  606 CBA------230  1  -458.0  -135.6   484.5              08
 614    1  1   1.000    64.0     0.0     0.0     0.0     0.0     0.0
PIRAJU---2GR   -75.2   -16.2     0.0     0.0     0.0     0.0     0.0
                                          0.7%                  641 PIRAJU---230  1    64.0   -16.2    66.0              05
1515    1  0   1.028     0.0     0.0     0.0     0.0     0.0     0.0
UTIBIRIT-138  -119.1     0.0     0.0     0.0     0.0     0.0     0.0
                                          3.2%                 1512 BETIM2---138  1     5.1    -4.2     6.4              03
                                          1.8%                 1567 REGAP--1-138  1     0.6     3.6     3.6              03
                                          0.0%                 1585 IBIRITEG-000  1     0.0     0.0     0.0 1.050F       03
                                          0.0%                 1586 IBIRITEV-000  1     0.0     0.0     0.0 1.050F       03
                                          2.6%                 4036 BETIM4---138  1    -5.7     0.6     5.6              03
1545  230  0   1.028     0.0     0.0    46.0     0.0     0.0     0.0
NOVAERA--230  -118.6     0.0     0.0    19.6     0.0     0.0     0.0
                                         18.6%                 1529 GUILMAN--230  1   -52.8   -23.9    56.3              03
                                          2.6%                 1534 ITABIRA--230  1     6.8     4.3     7.8              03
1592  230  0   1.035     0.0     0.0     0.0     0.0     0.0     0.0
PESTRELA-230  -117.9     0.0     0.0     0.0     0.0     0.0     0.0
                                         33.3%                 1530 IPATINGT-230  1    71.9   -40.2    79.6              03
                                          8.9%                 1534 ITABIRA--230  1    22.1     1.0    21.3              03
                                         65.6%                 1594 PESTRELA-2GR  1   -94.0    39.1    98.4 1.000F
1594    1  1   1.000    94.0     0.0     0.0     0.0     0.0     0.0
PESTRELA-2GR  -112.5   -29.1     0.0     0.0     0.0     0.0     0.0
                                         65.6%                 1592 PESTRELA-230  1    94.0   -29.1    98.4
2049    1  1   1.030    35.0     0.0     0.0     0.0     0.0     0.0
OURINHOS-3GR   -73.0     0.0     0.0     0.0     0.0     0.0     0.0
                                         77.2%                 2047 OURIN-G-Y-88  1    35.0     0.0    34.0              06
2955   14  0   1.000     0.0     0.0    42.0     0.0     0.0     0.0
CODEM-LIV-13  -110.1     0.0     0.0    12.3     0.0     0.0     0.0
                                          0.4%                 2982 CODEMIN-13    1   -42.0   -12.3    43.7              12
CEPEL - CENTRO DE PESQUISAS DE ENERGIA ELETRICA - PROGRAMA DE ANALISE DE REDES - V08MAR05A                            PAG. 387

ANUAL 06/07 * SETEMBRO 2006 PESADA S/SE 19H N/NE 19H * ANAT0 - FSE - C13
RELATORIO COMPLETO DO SISTEMA * AREA 41 * * PRODUTORES INDEPENDENTES - SE/CO *

X----------------- D A D O S  -  B A R R A ------------------------X------------ F L U X O S  -  C I R C U I T O S ------------X
 DA BARRA      TENSAO GERACAO INJ EQV  CARGA   ELO CC  SHUNT    MOTOR
 NUM. KV TIPO   MOD/     MW/     MW/     MW/     MW/   Mvar/     MW/
     NOME       ANG     Mvar    Mvar    Mvar    Mvar   EQUIV    Mvar  PARA BARRA                    FLUXOS
                                                FLUXO % SHUNT L         NUM.     NOME     NC     MW    Mvar  MVA/V_d   TAP  DEFAS TIE
X------------X-------X-------X-------X-------X-------X-------X-------X----X------------X--X-------X-------X-------X------X-----X---X

 2981    1  0   0.979     0.0     0.0   100.0     0.0    10.4     0.0
 N.TOCANT-13   -112.7     0.0     0.0    22.8     0.0     0.0     0.0
                                          1.0%                  788 N.TOCANT-230  1  -100.0   -12.4   102.9              01
 3962    1  1   1.000   340.0     0.0     0.0     0.0     0.0     0.0
 N.FLU-G1-2GR  -113.0  -105.7     0.0     0.0     0.0     0.0     0.0
                                          3.6%                 3966 MACAE----345  1   340.0  -105.7   356.1
 3966  345  0   1.028     0.0     0.0     0.0     0.0     0.0     0.0
 MACAE----345  -117.4     0.0     0.0     0.0     0.0     0.0     0.0
                                         33.7%                  140 ADRIANO--345  1  -262.2   -41.4   258.3              01
                                         33.7%                  140 ADRIANO--345  2  -262.2   -41.4   258.3              01
                                         44.2%                  147 CAMPOS---345  1   344.7   -48.6   338.7              01
                                         44.2%                  147 CAMPOS---345  2   344.7   -48.6   338.7              01
                                         44.3%                  147 CAMPOS---345  3   345.1   -47.8   339.0              01
                                          3.6%                 3962 N.FLU-G1-2GR  1  -340.0   135.3   356.1 1.000F
                                          1.9%                 3963 N.FLU-V1-1GR  1  -170.0    92.5   188.3 1.000F       01
                                          0.0%                 3977 MERCHANT-000  1     0.0     0.0     0.0 1.000F
                                          0.0%                 3978 MERCHANT-000  1     0.0     0.0     0.0 1.000F
```

```
 3972    1  0   0.972     0.0     0.0   181.0     0.0     0.0     0.0
 CSN-CONS.INT  -113.0     0.0     0.0    90.0     0.0     0.0     0.0
                                                 1.9%                 269 CTE-CSN--2GR  1  -181.0    47.1   192.4
                                                 1.4%                1673 C.S.N.---138  1     0.0  -137.1   141.0               09
 3974    1 -1   0.996     0.0     0.0     0.0     0.0     0.0     0.0
 ELETROB--000  -113.9     0.0     0.0     0.0     0.0     0.0     0.0
                                                 0.0%                3975 ELETROB--138  1     0.0     0.0     0.0 1.000F
 3975    1  0   0.996     0.0     0.0     0.0     0.0     0.0     0.0
 ELETROB--138  -113.9     0.0     0.0     0.0     0.0     0.0     0.0
                                                28.5%                 254 FONTES---138  1   -48.7     2.9    49.0               09
                                                28.5%                 254 FONTES---138  3   -48.7     2.9    49.0               09
                                                32.4%                 256 P.PASSOS-138  1   -55.5     0.7    55.7               09
                                                11.4%                 286 R.FREIRE-138  1     6.5   -18.5    19.7               09
                                                14.5%                 295 SEROPEDI-138  1   -23.0     9.7    25.0               09
                                                47.7%                1622 TAPGUANDU--1  1    81.4     7.8    82.1               09
                                                33.4%                1623 TAPGUANDU--2  1    57.1     2.2    57.4               09
                                                18.6%                1629 N.IGUACU-138  1    30.8    -7.7    31.9               09
                                                 0.0%                3974 ELETROB--000  1     0.0     0.0     0.0
 3977    1 -1   1.028     0.0     0.0     0.0     0.0     0.0     0.0
 MERCHANT-000  -117.4     0.0     0.0     0.0     0.0     0.0     0.0
                                                 0.0%                3966 MACAE----345  1     0.0     0.0     0.0
 3978    1 -1   1.028     0.0     0.0     0.0     0.0     0.0     0.0
 MERCHANT-000  -117.4     0.0     0.0     0.0     0.0     0.0     0.0
                                                 0.0%                3966 MACAE----345  1     0.0     0.0     0.0
CEPEL - CENTRO DE PESQUISAS DE ENERGIA ELETRICA - PROGRAMA DE ANALISE DE REDES - V08MAR05A                              PAG. 388

ANUAL 06/07 * SETEMBRO 2006 PESADA S/SE 19H N/NE 19H * ANAT0 - FSE - C13
RELATORIO COMPLETO DO SISTEMA * AREA 41 * * PRODUTORES INDEPENDENTES - SE/CO *

X----------------- D A D O S  -  B A R R A -------------------------X------------ F L U X O S  -  C I R C U I T O S ------------X
 DA BARRA      TENSAO GERACAO INJ EQV  CARGA   ELO CC  SHUNT    MOTOR
 NUM. KV TIPO   MOD/     MW/     MW/     MW/     MW/   Mvar/     MW/
     NOME       ANG     Mvar    Mvar    Mvar    Mvar   EQUIV    Mvar  PARA BARRA                    FLUXOS
                                                FLUXO % SHUNT L        NUM.     NOME     NC     MW    Mvar  MVA/V_d   TAP  DEFAS TIE
X------------X-------X-------X-------X-------X-------X-------X-------X----X------------X--X-------X-------X-------X------X-----X---X

 4042    1  1   1.050   264.0     0.0     0.0     0.0     0.0     0.0
 AIMORES--3GR  -104.6    42.9     0.0     0.0     0.0     0.0     0.0
                                                73.2%                4043 AIMORES--230  1   264.0    42.9   254.7
 4043    1  0   1.068     0.0     0.0     0.0     0.0     0.0     0.0
 AIMORES--230  -108.2     0.0     0.0     0.0     0.0     0.0     0.0
                                                48.8%                 319 CPENA----230  1   173.7    -8.1   162.9               02
                                                16.3%                2654 MASCAR.--230  1    54.1    21.3    54.4               11
                                                10.8%                2654 MASCAR.--230  2    36.3    12.9    36.1               11
                                                71.4%                4042 AIMORES--3GR  1  -264.0   -26.1   248.5 1.025F
 4052    1  1   1.050   245.0     0.0     0.0     0.0     0.0     0.0
 CAPIM-1--3GR   -76.0    -6.6     0.0     0.0     0.0     0.0     0.0
                                                72.7%                4053 CAPIM-1--138  1   245.0    -6.6   233.4
 4053    1  0   1.054     0.0     0.0     0.0     0.0     0.0     0.0
 CAPIM-1--138   -79.9     0.0     0.0     0.0     0.0     0.0     0.0
                                                64.1%                 321 EMBORCAC-138  1   122.5   -11.8   116.7               02
                                                64.1%                 321 EMBORCAC-138  2   122.5   -11.8   116.7               02
                                                72.7%                4052 CAPIM-1--3GR  1  -245.0    23.5   233.4 1.000F
 4100    1 -1   1.020     0.0     0.0     0.0     0.0     0.0     0.0
  UTJFORA1-1M  -114.7     0.0     0.0     0.0     0.0     0.0     0.0
                                                 0.0%                4101  JFORA1---13  1     0.0     0.0     0.0
 4101    1  0   1.020     0.0     0.0     0.0     0.0     0.0     0.0
  JFORA1---13  -114.7     0.0     0.0     0.0     0.0     0.0     0.0
                                                 0.0%                3330 U.GUARY--138  1     0.0     0.0     0.0               18
                                                 0.0%                4100  UTJFORA1-1M  1     0.0     0.0     0.0 1.000F
```

```
 4110    1  0   1.030     0.0     0.0   207.0     0.0     0.0     0.0
 ALCOA----138   -93.6     0.0     0.0    88.2     0.0     0.0     0.0
                                                2.2%                 170 P.CALDAS-138  1  -207.0   -88.2   218.5              01
 4111    1  0   1.030     0.0     0.0    21.7     0.0     0.0     0.0
 DME------138   -93.6     0.0     0.0     6.9     0.0     0.0     0.0
                                                6.7%                 170 P.CALDAS-138  1   -10.8    -3.4    11.1              01
                                                6.7%                 170 P.CALDAS-138  2   -10.8    -3.4    11.1              01
 4180    1 -1   1.039     0.0     0.0     0.0     0.0     0.0     0.0
 J.Fora-G-000  -114.2     0.0     0.0     0.0     0.0     0.0     0.0
                                                0.0%                4182 JF-CFCL--138  1     0.0     0.0     0.0
                                                0.0%                4182 JF-CFCL--138  2     0.0     0.0     0.0
```



```
X------------------ D A D O S  -  B A R R A -------------------------X------------ F L U X O S  -  C I R C U I T O S ------------X
 DA BARRA      TENSAO GERACAO INJ EQV  CARGA   ELO CC  SHUNT    MOTOR
 NUM. KV TIPO   MOD/     MW/     MW/     MW/     MW/   Mvar/     MW/
     NOME       ANG     Mvar    Mvar    Mvar    Mvar   EQUIV    Mvar  PARA BARRA                    FLUXOS
                                                FLUXO % SHUNT L         NUM.     NOME     NC     MW    Mvar  MVA/V_d   TAP  DEFAS TIE
X------------X-------X-------X-------X-------X-------X-------X-------X----X------------X--X-------X-------X-------X------X-----X---X

 4182    1  0   1.039     0.0     0.0     0.0     0.0     0.0     0.0
 JF-CFCL--138  -114.2     0.0     0.0     0.0     0.0     0.0     0.0
                                                0.0%                1563 J.FORA7--138  1     0.0     0.0     0.0              03
                                                0.0%                4180 J.Fora-G-000  1     0.0     0.0     0.0 1.000F
                                                0.0%                4180 J.Fora-G-000  2     0.0     0.0     0.0 1.000F
 4201    1  0   1.019     0.0     0.0     0.0     0.0     0.0     0.0
 TERMR2-1-138  -107.8     0.0     0.0     0.0     0.0     0.0     0.0
                                                3.9%                4200 S.JOSE2--138  1   382.0   -95.4   386.5              01
                                                2.1%                4203 TRG11-12-2GR  1  -211.0    56.7   214.4 1.000F
                                                1.7%                4204 TRV18----1GR  1  -171.0    38.7   172.1 1.000F
                                                0.0%                4205 TRV28----000  1     0.0     0.0     0.0 1.000F
 4202    1  0   1.030     0.0     0.0     0.0     0.0     0.0     0.0
 TERMR2-2-138  -111.0     0.0     0.0     0.0     0.0     0.0     0.0
                                                0.0%                 169 S.JOSE---138  1     0.0     0.0     0.0              01
                                                0.0%                4206 TRG21-22-000  1     0.0     0.0     0.0 1.000F
                                                0.0%                4207 TRG31-32-000  1     0.0     0.0     0.0 1.000F
                                                0.0%                4208 TRV38----000  1     0.0     0.0     0.0 1.000F
 4203    1  1   1.000   211.0     0.0     0.0     0.0     0.0     0.0
 TRG11-12-2GR  -103.0   -38.3     0.0     0.0     0.0     0.0     0.0
                                                2.1%                4201 TERMR2-1-138  1   211.0   -38.3   214.4
 4204    1  1   1.000   171.0     0.0     0.0     0.0     0.0     0.0
 TRV18----1GR  -101.5   -19.3     0.0     0.0     0.0     0.0     0.0
                                                1.7%                4201 TERMR2-1-138  1   171.0   -19.3   172.1
 4205    1 -1   1.019     0.0     0.0     0.0     0.0     0.0     0.0
 TRV28----000  -107.8     0.0     0.0     0.0     0.0     0.0     0.0
                                                0.0%                4201 TERMR2-1-138  1     0.0     0.0     0.0
 4206    1 -1   1.030     0.0     0.0     0.0     0.0     0.0     0.0
 TRG21-22-000  -111.0     0.0     0.0     0.0     0.0     0.0     0.0
                                                0.0%                4202 TERMR2-2-138  1     0.0     0.0     0.0
 4207    1 -1   1.030     0.0     0.0     0.0     0.0     0.0     0.0
 TRG31-32-000  -111.0     0.0     0.0     0.0     0.0     0.0     0.0
                                                0.0%                4202 TERMR2-2-138  1     0.0     0.0     0.0
 4208    1 -1   1.030     0.0     0.0     0.0     0.0     0.0     0.0
 TRV38----000  -111.0     0.0     0.0     0.0     0.0     0.0     0.0
                                                0.0%                4202 TERMR2-2-138  1     0.0     0.0     0.0
 4300    1 -1   1.039     0.0     0.0     0.0     0.0     0.0     0.0
 UTETLAGA-0GR   -63.2     0.0     0.0     0.0     0.0     0.0     0.0
```

```
                                                 0.%                 4302 UTETLAG_138A  1     0.0     0.0     0.0 1.000F
CEPEL - CENTRO DE PESQUISAS DE ENERGIA ELETRICA - PROGRAMA DE ANALISE DE REDES - V08MAR05A                                PAG. 390

ANUAL 06/07 * SETEMBRO 2006 PESADA S/SE 19H N/NE 19H * ANAT0 - FSE - C13
RELATORIO COMPLETO DO SISTEMA * AREA 41 * * PRODUTORES INDEPENDENTES - SE/CO *

X----------------- D A D O S  -  B A R R A -------------------------X------------ F L U X O S  -  C I R C U I T O S ------------X
 DA BARRA      TENSAO GERACAO INJ EQV  CARGA   ELO CC  SHUNT    MOTOR
 NUM. KV TIPO   MOD/     MW/     MW/     MW/     MW/   Mvar/     MW/
     NOME       ANG     Mvar    Mvar    Mvar    Mvar   EQUIV    Mvar  PARA BARRA                    FLUXOS
                                                FLUXO % SHUNT L         NUM.     NOME     NC     MW    Mvar  MVA/V_d   TAP  DEFAS TIE
X------------X-------X-------X-------X-------X-------X-------X-------X----X------------X--X-------X-------X-------X------X-----X---X

 4301    1 -1   1.039     0.0     0.0     0.0     0.0     0.0     0.0
 UTETLAG2_GER   -63.2     0.0     0.0     0.0     0.0     0.0     0.0
                                                 0.%                 4303 UTETLAG_138B  1     0.0     0.0     0.0 1.000F
 4302    1  0   1.039     0.0     0.0     0.0     0.0     0.0     0.0
 UTETLAG_138A   -63.2     0.0     0.0     0.0     0.0     0.0     0.0
                                                14.2%                  541 JUPIA----138  1   -30.4     2.6    29.3              05
                                                14.2%                  541 JUPIA----138  2   -30.4     2.6    29.3              05
                                                 9.7%                  543 3IRMAOS--138  1    -7.5    -3.0     7.8              05
                                                82.1%                 1903 3LAGOAS-Y138  1    68.2    -2.1    65.7              06
                                                 0.0%                 4300 UTETLAGA-0GR  1     0.0     0.0     0.0
                                                 0.0%                 4303 UTETLAG_138B  1     0.0     0.0     0.0
 4303    1  0   1.039     0.0     0.0     0.0     0.0     0.0     0.0
 UTETLAG_138B   -63.2     0.0     0.0     0.0     0.0     0.0     0.0
                                                 0.0%                  578 DERV_JUP_TRI  1     0.0     0.0     0.0              06
                                                 0.0%                  579 DERV_JUP_VAL  1     0.0     0.0     0.0              06
                                                 0.0%                 4301 UTETLAG2_GER  1     0.0     0.0     0.0
                                                 0.0%                 4302 UTETLAG_138A  1     0.0     0.0     0.0
 4520   14  1   1.000   141.0     0.0     0.0     0.0     0.0     0.0
 P.PEDRA--3GR   -60.6   -19.7     0.0     0.0     0.0     0.0     0.0
                                                77.0%                 4594 P.PEDRA--230  1   141.0   -19.7   142.4
 4585    1  0   1.001     0.0     0.0    16.0     0.0     0.0     0.0
 GERDAU---440   -91.4     0.0     0.0     5.3     0.0     0.0     0.0
                                                 0.2%                  585 DGERDAU--440  1   -16.0    -5.3    16.8              05
 4593    1  0   1.013     0.0     0.0     0.0     0.0     0.0     0.0
 EPE------138   -73.2     0.0     0.0     0.0     0.0     0.0     0.0
                                                 0.3%                 4533 COXIPO   138  1    28.0   -13.6    30.7              45
                                                47.9%                 4596 CBA--GAS-1GR  1   -90.0     7.0    89.1 1.000F
                                                24.0%                 4597 CBA--VAP-1GR  1   -45.0     5.3    44.7 1.000F
                                                 0.7%                 4713 V.GRANDE 138  1    75.7     1.7    74.8              46
                                                 0.3%                 4733 CPA      138  1    31.3    -0.4    30.9              46
 4594  230  0   1.015     0.0     0.0     0.0     0.0     0.0     0.0
 P.PEDRA--230   -65.3     0.0     0.0     0.0     0.0     0.0     0.0
                                                77.0%                 4520 P.PEDRA--3GR  1  -141.0    31.7   142.4 1.000F
                                                49.6%                 4522 RONDON.--230  1   141.0   -31.7   142.4              45
 4596    1  1   1.010    90.0     0.0     0.0     0.0     0.0     0.0
 CBA--GAS-1GR   -69.4    -1.0     0.0     0.0     0.0     0.0     0.0
                                                47.9%                 4593 EPE------138  1    90.0    -1.0    89.1
 4597    1  1   1.010    45.0     0.0     0.0     0.0     0.0     0.0
 CBA--VAP-1GR   -71.6    -4.0     0.0     0.0     0.0     0.0     0.0
                                                24.0%                 4593 EPE------138  1    45.0    -4.0    44.7
CEPEL - CENTRO DE PESQUISAS DE ENERGIA ELETRICA - PROGRAMA DE ANALISE DE REDES - V08MAR05A                                PAG. 391

ANUAL 06/07 * SETEMBRO 2006 PESADA S/SE 19H N/NE 19H * ANAT0 - FSE - C13
RELATORIO COMPLETO DO SISTEMA * AREA 41 * * PRODUTORES INDEPENDENTES - SE/CO *

X----------------- D A D O S  -  B A R R A -------------------------X------------ F L U X O S  -  C I R C U I T O S ------------X
 DA BARRA      TENSAO GERACAO INJ EQV  CARGA   ELO CC  SHUNT    MOTOR
```

```
 NUM. KV TIPO   MOD/     MW/     MW/     MW/     MW/   Mvar/     MW/
     NOME       ANG     Mvar    Mvar    Mvar    Mvar   EQUIV    Mvar  PARA BARRA                    FLUXOS
                                                FLUXO % SHUNT L         NUM.     NOME     NC     MW    Mvar  MVA/V_d   TAP  DEFAS TIE
X------------X-------X-------X-------X-------X-------X-------X-------X----X------------X--X-------X-------X-------X------X-----X---X

 4804    1  1   1.050    90.0     0.0     0.0     0.0     0.0     0.0
 GUAPORE--3GR   -43.9    25.6     0.0     0.0     0.0     0.0     0.0
                                                64.6%                   4805 GUAP1----138  1    90.0    25.6    89.1
 4805    1  0   1.031     0.0     0.0     0.0     0.0     0.0     0.0
 GUAP1----138   -48.1     0.0     0.0     0.0     0.0     0.0     0.0
                                                64.6%                   4804 GUAPORE--3GR  1   -90.0   -18.5    89.1 1.000F
                                                31.8%                   4807 JAURU    138  1    45.0     9.3    44.6              46
                                                31.8%                   4807 JAURU    138  2    45.0     9.3    44.6              46
 4808    1  0   1.031     0.0     0.0     0.0     0.0     0.0     0.0
 UHEJAURU-138   -48.1     0.0     0.0     0.0     0.0     0.0     0.0
                                                47.8%                   4807 JAURU    138  1    48.5     8.8    47.8              46
                                                47.8%                   4807 JAURU    138  2    48.5     8.8    47.8              46
                                                 1.0%                   4809 JAURU----3GR  1   -97.0   -17.7    95.6 1.000F
 4809    1  1   1.050    97.0     0.0     0.0     0.0     6.0     0.0
 JAURU----3GR   -43.4    20.0     0.0     0.0     0.0     0.0     0.0
                                                 1.0%                   4808 UHEJAURU-138  1    97.0    26.0    95.6
 9010    1  0   1.052     0.0     0.0     0.0     0.0     0.0     0.0
 IPATING-FIC1  -122.7     0.0     0.0     0.0     0.0     0.0     0.0
                                                74.5%                   1530 IPATINGT-230  1   -24.7    -7.7    24.6              03
                                                74.5%                   9011 IPATINGA1-13  1    24.7     7.7    24.6              03


TOTAIS DA AREA 41


X--------X--------X--------X--------X--------X--------X--------X--------X
  GERACAO  INJ EQV   CARGA   ELO CC    SHUNT   EXPORT   IMPORT   PERDAS
    MW/      MW/     MW/     MW/     Mvar/    MW/      MW/      MW/
   Mvar     Mvar     Mvar    Mvar     EQUIV   Mvar     Mvar     Mvar
X--------X--------X--------X--------X--------X--------X--------X--------X

   2068.0      0.0   1177.7      0.0     16.3   2851.9   1972.4     10.8
   -174.9      0.0    402.2      0.0      0.0    209.5    990.9    220.6
```





```
X----------------- D A D O S  -  B A R R A -------------------------X------------ F L U X O S  -  C I R C U I T O S ------------X
 DA BARRA      TENSAO GERACAO INJ EQV  CARGA   ELO CC  SHUNT    MOTOR
 NUM. KV TIPO   MOD/     MW/     MW/     MW/     MW/   Mvar/     MW/
     NOME       ANG     Mvar    Mvar    Mvar    Mvar   EQUIV    Mvar  PARA BARRA                    FLUXOS
                                                FLUXO % SHUNT L         NUM.     NOME     NC     MW    Mvar  MVA/V_d   TAP  DEFAS TIE
X------------X-------X-------X-------X-------X-------X-------X-------X----X------------X--X-------X-------X-------X------X-----X---X

  470    1  0   1.010     0.0     0.0     0.0     0.0     0.0     0.0
 CARBOCLORO88   -96.2     0.0     0.0     0.0     0.0     0.0     0.0
                                                36.7%                    473 BAIXADA--088  1   -87.5    -0.6    86.6              04
                                                73.4%                    481 H.BORDEN--88  1    87.5     0.6    86.6              27
 3066    1  0   1.038     0.0     0.0    12.3     0.0     0.0     0.0
 MANAH--138     -93.9     0.0     0.0     3.0     0.0     0.0     0.0
                                                 0.1%                    723 MANAH-YE-138  1   -12.3    -3.0    12.2              06
 3087    1  0   1.035     0.0     0.0    23.7     0.0     0.0     0.0
 VCARV--013     -95.0     0.0     0.0     7.8     0.0     0.0     0.0
```

```
                                                  0.2%                  734 V.CARVAL-138  1   -23.7    -7.8    24.1                06
 3412    1  0   1.040     0.0     0.0     0.0     0.0     0.0     0.0
 ESOUZA-088    -101.6     0.0     0.0     0.0     0.0     0.0     0.0
                                                  0.0%                  411 E.SOUZA--088  1     0.0     0.0     0.0                04
 3414    1  0   0.999     0.0     0.0   432.7     0.0     0.0     0.0
 BJA----088     -97.1     0.0     0.0    98.6     0.0     0.0     0.0
                                                 74.1%                  576 B.JARDIM-088  1  -432.7   -98.6   444.3                05
 3415    1  0   0.999     0.0     0.0   675.3     0.0     0.0     0.0
 OESTE--088     -93.1     0.0     0.0    96.2     0.0     0.0     0.0
                                                  6.8%                  415 OESTE----088  1  -675.3   -96.2   682.6                04
 3417    1  0   1.005     0.0     0.0    24.6     0.0     0.0     0.0
 HBO-BSA56-88   -97.2     0.0     0.0     8.1     0.0     0.0     0.0
                                                 84.7%                  473 BAIXADA--088  5  -116.7   -13.7   116.9                04
                                                 66.5%                  481 H.BORDEN--88  5    92.1     5.6    91.8                27
 3418    1  0   1.039     0.0     0.0     5.7     0.0     0.0     0.0
 PROGAMBLE138   -99.1     0.0     0.0     1.9     0.0     0.0     0.0
                                                 41.3%                  575 B.JARDIM-138  1   -56.3   -31.2    62.0                05
                                                 37.5%                  681 BRAGANCA-138  1    50.6    29.3    56.3                06
 3419    1  0   0.996     0.0     0.0    33.3     0.0     0.0     0.0
 INDANOVA-138   -98.0     0.0     0.0    10.9     0.0     0.0     0.0
                                                 16.3%                 2183 BANDEIRAN138  1    22.0     7.1    23.3                07
                                                 40.9%                 2216 MORROAZUL138  1   -55.3   -18.0    58.5                07
 3471    1  0   1.029     0.0     0.0   220.0     0.0     0.0     0.0
 BSA----345     -88.8     0.0     0.0    58.9     0.0     0.0     0.0
                                                  2.2%                  471 BAIXADA--345  1  -220.0   -58.9   221.4                04
 3474    1  0   1.010     0.0     0.0    42.6     0.0     0.0     0.0
 BSANT--088     -96.2     0.0     0.0    14.0     0.0     0.0     0.0
                                                  0.4%                  473 BAIXADA--088  1   -42.6   -14.0    44.4                04
CEPEL - CENTRO DE PESQUISAS DE ENERGIA ELETRICA - PROGRAMA DE ANALISE DE REDES - V08MAR05A                                 PAG. 393

ANUAL 06/07 * SETEMBRO 2006 PESADA S/SE 19H N/NE 19H * ANAT0 - FSE - C13
RELATORIO COMPLETO DO SISTEMA * AREA 42 * *         Cia. PIRATININGA         *

X----------------- D A D O S  -  B A R R A -------------------------X------------- F L U X O S  -  C I R C U I T O S -------------X
 DA BARRA      TENSAO GERACAO INJ EQV  CARGA   ELO CC  SHUNT    MOTOR
 NUM. KV TIPO   MOD/     MW/     MW/     MW/     MW/   Mvar/     MW/
     NOME       ANG     Mvar    Mvar    Mvar    Mvar   EQUIV    Mvar  PARA BARRA                    FLUXOS
                                                FLUXO % SHUNT L         NUM.     NOME     NC     MW    Mvar  MVA/V_d   TAP  DEFAS TIE
X------------X-------X-------X-------X-------X-------X-------X-------X----X------------X--X-------X-------X-------X------X-----X---X

 3477    1  0   1.006     0.0     0.0    20.5     0.0     0.0     0.0
 AGA+PETC--88   -96.9     0.0     0.0     6.7     0.0     0.0     0.0
                                                 82.8%                  473 BAIXADA--088  1   -98.2    -3.2    97.7                04
                                                 65.5%                  481 H.BORDEN--88  1    77.7    -3.5    77.3                27
 3481    1  0   1.003     0.0     0.0   405.1     0.0     0.0     0.0
 HBO-----88     -97.7     0.0     0.0    71.0     0.0     0.0     0.0
                                                  4.1%                  481 H.BORDEN--88  1  -405.1   -71.0   410.0                27


TOTAIS DA AREA 42


X--------X--------X--------X--------X--------X--------X--------X--------X
  GERACAO  INJ EQV   CARGA   ELO CC    SHUNT   EXPORT   IMPORT   PERDAS
    MW/      MW/      MW/      MW/     Mvar/     MW/      MW/      MW/
   Mvar     Mvar     Mvar     Mvar     EQUIV    Mvar     Mvar     Mvar
X--------X--------X--------X--------X--------X--------X--------X--------X

      0.0      0.0   1895.8      0.0      0.0    328.7   2225.7      1.2
```

```
     0.0      0.0    377.1      0.0      0.0     41.6    423.3      4.6
CEPEL - CENTRO DE PESQUISAS DE ENERGIA ELETRICA - PROGRAMA DE ANALISE DE REDES - V08MAR05A                                PAG. 394

ANUAL 06/07 * SETEMBRO 2006 PESADA S/SE 19H N/NE 19H * ANAT0 - FSE - C13
RELATORIO COMPLETO DO SISTEMA * AREA 44 * *           ELETRONUCLEAR          *

X----------------- D A D O S  -  B A R R A -------------------------X------------ F L U X O S  -  C I R C U I T O S ------------X
 DA BARRA      TENSAO GERACAO INJ EQV  CARGA   ELO CC  SHUNT    MOTOR
 NUM. KV TIPO   MOD/     MW/     MW/     MW/     MW/   Mvar/     MW/
     NOME       ANG     Mvar    Mvar    Mvar    Mvar   EQUIV    Mvar  PARA BARRA                    FLUXOS
                                                FLUXO % SHUNT L         NUM.     NOME     NC     MW    Mvar  MVA/V_d   TAP  DEFAS TIE
X------------X-------X-------X-------X-------X-------X-------X-------X----X------------X--X-------X-------X-------X------X-----X---X

   10    1 -1   1.008     0.0     0.0    28.5     0.0     0.0     0.0
 ANGRA-1--000  -100.7     0.0     0.0    16.9     0.0     0.0     0.0
                                              4.3%                    105 ANGRA----500  1   -28.5   -16.9    32.9               01
   11    1  1   1.010  1080.0     0.0    67.9     0.0     0.0     0.0
 ANGRA-2--1GR   -94.9    84.3     0.0    47.1     0.0     0.0     0.0
                                             68.2%                    105 ANGRA----500  1  1012.1    37.2  1002.8               01


TOTAIS DA AREA 44


X--------X--------X--------X--------X--------X--------X--------X--------X
  GERACAO  INJ EQV   CARGA   ELO CC    SHUNT   EXPORT   IMPORT   PERDAS
    MW/      MW/      MW/      MW/     Mvar/     MW/      MW/      MW/
   Mvar     Mvar     Mvar     Mvar     EQUIV    Mvar     Mvar     Mvar
X--------X--------X--------X--------X--------X--------X--------X--------X

   1080.0      0.0     96.4      0.0      0.0   1012.1     28.5      0.0
     84.3      0.0     64.0      0.0      0.0     37.2     16.9      0.0
CEPEL - CENTRO DE PESQUISAS DE ENERGIA ELETRICA - PROGRAMA DE ANALISE DE REDES - V08MAR05A                                PAG. 395

ANUAL 06/07 * SETEMBRO 2006 PESADA S/SE 19H N/NE 19H * ANAT0 - FSE - C13
RELATORIO COMPLETO DO SISTEMA * AREA 45 * *        ENORTE (MATO GROSSO)        *

X----------------- D A D O S  -  B A R R A -------------------------X------------ F L U X O S  -  C I R C U I T O S ------------X
 DA BARRA      TENSAO GERACAO INJ EQV  CARGA   ELO CC  SHUNT    MOTOR
 NUM. KV TIPO   MOD/     MW/     MW/     MW/     MW/   Mvar/     MW/
     NOME       ANG     Mvar    Mvar    Mvar    Mvar   EQUIV    Mvar  PARA BARRA                    FLUXOS
                                                FLUXO % SHUNT L         NUM.     NOME     NC     MW    Mvar  MVA/V_d   TAP  DEFAS TIE
X------------X-------X-------X-------X-------X-------X-------X-------X----X------------X--X-------X-------X-------X------X-----X---X

 4502  230  0   1.017     0.0     0.0     0.0     0.0   -20.7     0.0
 B.PEIXE--230   -74.4     0.0     0.0     0.0     0.0     0.0     0.0                                -41.3 SHL
                                             36.6%   -20.7          231 R.VERDE--230  1    86.6   -20.4    87.6               01
                                             32.1%   -20.7          231 R.VERDE--230  2    62.2   -16.0    63.2               01
                                             60.1%                 4509 B.PEIXE  FIC  1    28.0   -12.2    30.1 1.050F
                                             67.5%                 4522 RONDON.--230  1  -158.1    43.6   161.3
                                             12.2%                 4522 RONDON.--230  2   -18.8   -15.7    24.1
 4503    1  0   1.032     0.0     0.0     0.0     0.0     0.0     0.0
 B.PEIXE  138   -77.2     0.0     0.0     0.0     0.0     0.0     0.0
                                             60.5%                 4509 B.PEIXE  FIC  1   -28.0    13.8    30.3 1.043*
                                              0.3%                 4653 B.GARCAS 138  1    28.0   -13.8    30.3               46
 4506    1  0   0.989     0.0     0.0     0.0     0.0     0.0     0.0
 B.PEIXE   13   -77.1     0.0     0.0     0.0     0.0     0.0     0.0
                                              0.0%                 4509 B.PEIXE  FIC  1     0.0     0.0     0.0 1.000F
 4509    1  0   0.989     0.0     0.0     0.0     0.0     0.0     0.0
```

```
 B.PEIXE  FIC   -77.1     0.0     0.0     0.0     0.0     0.0     0.0
                                                63.1%                 4502 B.PEIXE--230  1   -28.0    13.7    31.6
                                                63.1%                 4503 B.PEIXE  138  1    28.0   -13.7    31.6
                                                 0.0%                 4506 B.PEIXE   13  1     0.0     0.0     0.0
 4512  230  0   1.059     0.0     0.0     0.0     0.0     0.0     0.0
 C.MAGAL. 230   -76.9     0.0     0.0     0.0     0.0     0.0     0.0
                                                23.3%                  231 R.VERDE--230  1    44.3   -19.7    45.8                01
                                                23.3%                 4522 RONDON.--230  1   -44.3    19.7    45.8
 4513    1  0   0.973     0.0     0.0     0.0     0.0    -9.5     0.0
 C.MAGAL. 138   -84.2     0.0     0.0     0.0     0.0     0.0     0.0
                                                26.1%                  791 P. DAS EMAS   1    18.6   -11.8    22.7                12
                                                33.5%                 4516 C.MAGAL.  13  1     4.7     1.4     5.0 0.965*
                                                 7.2%                 4611 FERRONOR 138  1     5.6    -0.2     5.8                46
                                                31.7%                 4619 ENG PETR 138  1   -28.9     1.2    29.8                46
 4515  230  0   1.020     0.0     0.0     0.0     0.0     0.0     0.0
 CUIABA---230   -70.9     0.0     0.0     0.0     0.0     0.0     0.0
                                                16.0%                 4524 RON-CUI--230  1    64.6    -6.1    63.6
                                                 8.0%                 4532 COXIPO---230  1   -32.3     3.0    31.8
                                                 8.0%                 4532 COXIPO---230  2   -32.3     3.0    31.8
 4516    1  0   0.997     0.0     0.0     4.7     0.0     0.0     0.0
 C.MAGAL.  13   -86.4     0.0     0.0     1.2     0.0     0.0     0.0
                                                32.3%                 4513 C.MAGAL. 138  1    -4.7    -1.2     4.8
CEPEL - CENTRO DE PESQUISAS DE ENERGIA ELETRICA - PROGRAMA DE ANALISE DE REDES - V08MAR05A                                PAG. 396

ANUAL 06/07 * SETEMBRO 2006 PESADA S/SE 19H N/NE 19H * ANAT0 - FSE - C13
RELATORIO COMPLETO DO SISTEMA * AREA 45 * *       ENORTE (MATO GROSSO)       *

X----------------- D A D O S  -  B A R R A -------------------------X------------ F L U X O S  -  C I R C U I T O S ------------X
 DA BARRA      TENSAO GERACAO INJ EQV  CARGA   ELO CC  SHUNT    MOTOR
 NUM. KV TIPO   MOD/     MW/     MW/     MW/     MW/   Mvar/     MW/
     NOME       ANG     Mvar    Mvar    Mvar    Mvar   EQUIV    Mvar  PARA BARRA                    FLUXOS
                                                FLUXO % SHUNT L         NUM.     NOME     NC     MW    Mvar  MVA/V_d   TAP  DEFAS TIE
X------------X-------X-------X-------X-------X-------X-------X-------X----X------------X--X-------X-------X-------X------X-----X---X

 4521    1  0   1.022     0.0     0.0     0.0     0.0     0.0     0.0
 ITIQUIRA-230   -66.8     0.0     0.0     0.0     0.0     0.0     0.0
                                                77.0%                 4522 RONDON.--230  1   124.0   -21.4   123.1
                                                70.1%                 4523 ITIQ-M1--2GR  1   -48.0     8.3    47.7 1.030F
                                                71.2%                 4525 ITIQ-M2--2GR  1   -76.0    13.1    75.5 1.030F
 4522  230  0   1.018     0.0     0.0     0.0     0.0     0.0     0.0
 RONDON.--230   -72.3     0.0     0.0     0.0     0.0     0.0     0.0                                -103.7 SHL
                                                66.2%   -20.7         4502 B.PEIXE--230  1   159.9   -19.6   158.2
                                                10.5%   -31.1         4502 B.PEIXE--230  2    18.9     9.1    20.7
                                                24.2%   -31.1         4512 C.MAGAL. 230  1    45.4   -17.3    47.7
                                                76.7%   -10.4         4521 ITIQUIRA-230  1  -121.7    28.5   122.7
                                                19.0%                 4524 RON-CUI--230  1   -64.0   -43.1    75.8
                                                68.6%                 4528 RONDON-2-AUX  1    68.0    15.7    68.6 1.000F
                                                62.0%                 4529 RONDON   AUX  1    61.5    14.2    62.0 1.000F
                                                 8.9%                 4532 COXIPO---230  1   -15.2   -14.7    20.8
                                                 8.9%                 4532 COXIPO---230  2   -15.2   -14.7    20.8
                                                49.2%   -10.4         4594 P.PEDRA--230  1  -137.6    41.9   141.2                41
 4523    1  1   0.980    48.0     0.0     0.0     0.0     0.0     0.0
 ITIQ-M1--2GR   -60.9    -3.3     0.0     0.0     0.0     0.0     0.0
                                                72.2%                 4521 ITIQUIRA-230  1    48.0    -3.3    49.1
 4524  230  0   0.995     0.0     0.0     0.0     0.0     0.0     0.0
 RON-CUI--230   -74.4     0.0     0.0     0.0     0.0     0.0     0.0
                                                19.0%                 4515 CUIABA---230  1   -64.0   -39.8    75.8
                                                19.0%                 4522 RONDON.--230  1    64.0    39.8    75.8
 4525    1  1   0.980    76.0     0.0     0.0     0.0     0.0     0.0
 ITIQ-M2--2GR   -60.9    -5.1     0.0     0.0     0.0     0.0     0.0
```

```
                                                   73.3%                 4521 ITIQUIRA-230  1    76.0    -5.1    77.7
 4526    1  0   1.007     0.0     0.0     0.0     0.0     0.0     0.0
 RON-TER-1 13   -75.2     0.0     0.0     0.0     0.0     0.0     0.0
                                                    0.0%                 4529 RONDON   AUX  1     0.0     0.0     0.0 1.000F
 4527    1  0   1.007     0.0     0.0     0.0     0.0     0.0     0.0
 RON-TER-2 13   -75.3     0.0     0.0     0.0     0.0     0.0     0.0
                                                    0.0%                 4528 RONDON-2-AUX  1     0.0     0.0     0.0 1.000F
 4528    1  0   1.007     0.0     0.0     0.0     0.0     0.0     0.0
 RONDON-2-AUX   -75.3     0.0     0.0     0.0     0.0     0.0     0.0
                                                   68.6%                 4522 RONDON.--230  1   -68.0   -12.0    68.6
                                                    0.0%                 4527 RON-TER-2 13  1     0.0     0.0     0.0
                                                   68.6%                 4623 RONDO CM 138  1    68.0    12.0    68.6                46
CEPEL - CENTRO DE PESQUISAS DE ENERGIA ELETRICA - PROGRAMA DE ANALISE DE REDES - V08MAR05A                                PAG. 397

ANUAL 06/07 * SETEMBRO 2006 PESADA S/SE 19H N/NE 19H * ANAT0 - FSE - C13
RELATORIO COMPLETO DO SISTEMA * AREA 45 * *       ENORTE (MATO GROSSO)       *

X----------------- D A D O S  -  B A R R A ------------------------X------------ F L U X O S  -  C I R C U I T O S ------------X
 DA BARRA      TENSAO GERACAO INJ EQV  CARGA   ELO CC  SHUNT    MOTOR
 NUM. KV TIPO   MOD/     MW/     MW/     MW/     MW/   Mvar/     MW/
     NOME       ANG     Mvar    Mvar    Mvar    Mvar   EQUIV    Mvar  PARA BARRA                    FLUXOS
                                                FLUXO % SHUNT L         NUM.     NOME     NC     MW    Mvar  MVA/V_d   TAP  DEFAS TIE
X------------X-------X-------X-------X-------X-------X-------X-------X----X------------X--X-------X-------X-------X------X-----X---X

 4529    1  0   1.007     0.0     0.0     0.0     0.0     0.0     0.0
 RONDON   AUX   -75.2     0.0     0.0     0.0     0.0     0.0     0.0
                                                   62.0%                 4522 RONDON.--230  1   -61.5   -10.9    62.0
                                                    0.0%                 4526 RON-TER-1 13  1     0.0     0.0     0.0
                                                   62.0%                 4623 RONDO CM 138  1    61.5    10.9    62.0                46
 4530    1  0   1.024     0.0     0.0     0.0     0.0     0.0     0.0
 COXIPO CE 12   -70.7     2.5     0.0     0.0     0.0     0.0     0.0
                                                    3.5%                 4532 COXIPO---230  1     0.0     2.5     2.5 1.000F
 4532  230  0   1.020     0.0     0.0     0.0     0.0     0.0     0.0
 COXIPO---230   -70.7     0.0     0.0     0.0     0.0     0.0     0.0                                  -124.8 SHL
                                                    8.2%                 4515 CUIABA---230  1    32.3    -7.2    32.5
                                                    8.2%                 4515 CUIABA---230  2    32.3    -7.2    32.5
                                                    8.2%   -31.2         4522 RONDON.--230  1    15.3    12.2    19.2
                                                    8.2%   -31.2         4522 RONDON.--230  2    15.3    12.2    19.2
                                                    3.5%                 4530 COXIPO CE 12  1     0.0    -2.5     2.5
                                                   57.1%                 4537 COXIPO A AUX  1    58.0    -5.4    57.1 1.000F
                                                   57.2%                 4538 COXIPO B AUX  1    58.1    -5.5    57.2 1.000F
                                                   57.1%                 4539 COXIPO C AUX  1    58.0    -5.4    57.1 1.000F
                                                   10.5%                 4542 NOBRES---230  1   -16.6   -19.3    25.0
                                                   23.4%   -31.2         4862 JAURU----230  1  -126.3    14.1   124.6
                                                   23.4%   -31.2         4862 JAURU----230  2  -126.3    14.1   124.6
 4533    1  0   1.014     0.0     0.0     7.4     0.0     0.0     0.0
 COXIPO   138   -73.4     0.0     0.0     1.8     0.0     0.0     0.0
                                                   58.5%                 4537 COXIPO A AUX  1   -58.0   -12.7    58.5 0.988*
                                                   58.6%                 4538 COXIPO B AUX  1   -58.1   -12.6    58.6 0.988*
                                                   58.5%                 4539 COXIPO C AUX  1   -58.0   -12.6    58.5 0.988*
                                                    0.3%                 4593 EPE------138  1   -28.0    13.0    30.5                41
                                                   12.6%                 4643 JACIARA  138  1     9.4    -7.5    11.9                46
                                                   58.6%                 4703 CUIABA   138  1    40.5     6.4    40.5                46
                                                   58.6%                 4703 CUIABA   138  2    40.5     6.4    40.5                46
                                                   21.9%                 4713 V.GRANDE 138  1    29.3     1.5    28.9                46
                                                   23.0%                 4733 CPA      138  1    23.0     3.4    23.0                46
                                                   23.0%                 4733 CPA      138  2    23.0     3.4    23.0                46
                                                   59.6%                 4796 COXIPO 1  13  1    14.4     4.5    14.9 1.002*         46
                                                   60.0%                 4797 COXIPO 2  13  1    14.4     4.8    15.0 0.998*         46
 4534    1  0   1.054     0.0     0.0     0.0     0.0    21.3     0.0
```

```
 COX-TER.A 13   -73.5     0.0     0.0     0.0     0.0     0.0     0.0
                                                61.4%                 4537 COXIPO A AUX  1     0.0    21.3    20.2 1.000F
 4535    1  0   1.054     0.0     0.0     0.0     0.0    21.3     0.0
 COX-TER.B 13   -73.5     0.0     0.0     0.0     0.0     0.0     0.0
                                                61.3%                 4538 COXIPO B AUX  1     0.0    21.3    20.2 1.000F
CEPEL - CENTRO DE PESQUISAS DE ENERGIA ELETRICA - PROGRAMA DE ANALISE DE REDES - V08MAR05A                          PAG. 398

ANUAL 06/07 * SETEMBRO 2006 PESADA S/SE 19H N/NE 19H * ANAT0 - FSE - C13
RELATORIO COMPLETO DO SISTEMA * AREA 45 * *       ENORTE (MATO GROSSO)       *

X----------------- D A D O S  -  B A R R A -------------------------X------------ F L U X O S  -  C I R C U I T O S ------------X
 DA BARRA      TENSAO GERACAO INJ EQV  CARGA   ELO CC  SHUNT    MOTOR
 NUM. KV TIPO   MOD/     MW/     MW/     MW/     MW/   Mvar/     MW/
     NOME       ANG     Mvar    Mvar    Mvar    Mvar   EQUIV    Mvar  PARA BARRA                    FLUXOS
                                                FLUXO % SHUNT L         NUM.     NOME     NC     MW    Mvar  MVA/V_d   TAP  DEFAS TIE
X------------X-------X-------X-------X-------X-------X-------X-------X----X------------X--X-------X-------X-------X------X-----X---X

 4536    1  0   1.055     0.0     0.0     0.0     0.0    21.4     0.0
 COX-TER.C 13   -73.5     0.0     0.0     0.0     0.0     0.0     0.0
                                                61.4%                 4539 COXIPO C AUX  1     0.0    21.4    20.2 1.000F
 4537    1  0   1.026     0.0     0.0     0.0     0.0     0.0     0.0
 COXIPO A AUX   -73.5     0.0     0.0     0.0     0.0     0.0     0.0
                                                57.1%                 4532 COXIPO---230  1   -58.0     8.2    57.1
                                                57.8%                 4533 COXIPO   138  1    58.0    12.6    57.8
                                                61.4%                 4534 COX-TER.A 13  1     0.0   -20.8    20.2
 4538    1  0   1.026     0.0     0.0     0.0     0.0     0.0     0.0
 COXIPO B AUX   -73.5     0.0     0.0     0.0     0.0     0.0     0.0
                                                57.2%                 4532 COXIPO---230  1   -58.1     8.3    57.2
                                                57.9%                 4533 COXIPO   138  1    58.1    12.5    57.9
                                                61.3%                 4535 COX-TER.B 13  1     0.0   -20.8    20.2
 4539    1  0   1.026     0.0     0.0     0.0     0.0     0.0     0.0
 COXIPO C AUX   -73.5     0.0     0.0     0.0     0.0     0.0     0.0
                                                57.1%                 4532 COXIPO---230  1   -58.0     8.2    57.1
                                                57.8%                 4533 COXIPO   138  1    58.0    12.5    57.8
                                                61.4%                 4536 COX-TER.C 13  1     0.0   -20.8    20.2
 4542  230  0   1.032     0.0     0.0     0.0     0.0     0.0     0.0
 NOBRES---230   -69.9     0.0     0.0     0.0     0.0     0.0     0.0
                                                 6.8%                 4532 COXIPO---230  1    16.7    -1.2    16.2
                                                62.2%                 4552 N.MUTUM--230  1   153.6     1.5   148.8
                                                69.0%                 4592 MANSO----230  1  -170.3    -0.3   164.9
 4552  230  0   1.007     0.0     0.0     0.0     0.0     0.0     0.0
 N.MUTUM--230   -78.1     0.0     0.0     0.0     0.0     0.0     0.0                                -20.3 SHL
                                                62.9%   -20.3         4542 NOBRES---230  1  -149.9    21.5   150.3
                                                42.6%                 4559 N.MUTUM  FIC  1    12.7     2.1    12.8 1.000*
                                                57.8%                 4572 LUCAS-RV-230  1   137.2   -23.5   138.2
 4554    1  0   1.000     0.0     0.0    12.7     0.0     0.0     0.0
 N.MUTUM   69   -81.0     0.0     0.0     1.4     0.0     0.0     0.0
                                                42.6%                 4559 N.MUTUM  FIC  1   -12.7    -1.4    12.8
 4556    1  0   1.001     0.0     0.0     0.0     0.0     0.0     0.0
 N.MUTUM   13   -80.3     0.0     0.0     0.0     0.0     0.0     0.0
                                                 0.0%                 4559 N.MUTUM  FIC  1     0.0     0.0     0.0 1.000F
 4559    1  0   1.001     0.0     0.0     0.0     0.0     0.0     0.0
 N.MUTUM  FIC   -80.3     0.0     0.0     0.0     0.0     0.0     0.0
                                                42.6%                 4552 N.MUTUM--230  1   -12.7    -1.6    12.8
                                                42.6%                 4554 N.MUTUM   69  1    12.7     1.6    12.8
                                                 0.0%                 4556 N.MUTUM   13  1     0.0     0.0     0.0
CEPEL - CENTRO DE PESQUISAS DE ENERGIA ELETRICA - PROGRAMA DE ANALISE DE REDES - V08MAR05A                          PAG. 399

ANUAL 06/07 * SETEMBRO 2006 PESADA S/SE 19H N/NE 19H * ANAT0 - FSE - C13
RELATORIO COMPLETO DO SISTEMA * AREA 45 * *       ENORTE (MATO GROSSO)       *
```

```
X----------------- D A D O S  -  B A R R A ------------------------X------------ F L U X O S  -  C I R C U I T O S ------------X
 DA BARRA      TENSAO GERACAO INJ EQV  CARGA   ELO CC  SHUNT    MOTOR
 NUM. KV TIPO   MOD/     MW/     MW/     MW/     MW/   Mvar/     MW/
     NOME       ANG     Mvar    Mvar    Mvar    Mvar   EQUIV    Mvar  PARA BARRA                    FLUXOS
                                                FLUXO % SHUNT L         NUM.     NOME     NC     MW    Mvar  MVA/V_d   TAP  DEFAS TIE
X------------X-------X-------X-------X-------X-------X-------X-------X----X------------X--X-------X-------X-------X------X-----X---X

 4562  230  0   1.014     0.0     0.0     0.0     0.0     0.0     0.0
 SORRISO--230   -88.4     0.0     0.0     0.0     0.0     0.0     0.0
                                                56.9%                 4568 SOR.ELN.FIC2  1    15.5     7.7    17.1 0.970F
                                                51.4%                 4569 SORR.ELN FIC  1    14.7     5.2    15.4 0.970F
                                                49.8%                 4572 LUCAS-RV-230  1  -117.4    27.6   118.9
                                                39.7%                 4582 SINOP----230  1    87.1   -40.5    94.8
 4564    1  0   1.019     0.0     0.0     0.0     0.0     0.0     0.0
 SORR. ELN 69   -91.6     0.0     0.0     0.0     0.0     0.0     0.0
                                                43.7%                 4568 SOR.ELN.FIC2  1   -12.0    -5.8    13.1
                                                63.2%                 4569 SORR.ELN FIC  1   -14.7   -12.5    19.0
                                            SUP 106.1%                 4914 SORR.CEMAT69  1    26.8    18.3    31.8              46
 4566    1  0   1.120     0.0     0.0     0.0     0.0     9.0     0.0
 Sorriso--13.   -90.8     0.0     0.0     0.0     0.0     0.0     0.0
                                                80.7%                 4569 SORR.ELN FIC  1     0.0     9.0     8.1 1.000F
 4567    1  0   1.009     0.0     0.0     3.4     0.0     0.0     0.0
 SOR.ELN2--13   -93.9     0.0     0.0     0.7     0.0     0.0     0.0
                                                34.8%                 4568 SOR.ELN.FIC2  1    -3.4    -0.7     3.5 1.000F
 4568    1  0   1.018     0.0     0.0     0.0     0.0     0.0     0.0
 SOR.ELN.FIC2   -91.7     0.0     0.0     0.0     0.0     0.0     0.0
                                                55.1%                 4562 SORRISO--230  1   -15.5    -6.6    16.5
                                                43.7%                 4564 SORR. ELN 69  1    12.0     5.8    13.1
                                                34.8%                 4567 SOR.ELN2--13  1     3.4     0.8     3.5
 4569    1  0   1.031     0.0     0.0     0.0     0.0     0.0     0.0
 SORR.ELN FIC   -90.8     0.0     0.0     0.0     0.0     0.0     0.0
                                                49.8%                 4562 SORRISO--230  1   -14.7    -4.5    15.0
                                                63.2%                 4564 SORR. ELN 69  1    14.7    12.8    19.0
                                                80.7%                 4566 Sorriso--13.  1     0.0    -8.3     8.1
 4572  230  0   1.007     0.0     0.0     0.0     0.0     0.0     0.0
 LUCAS-RV-230   -83.7     0.0     0.0     0.0     0.0     0.0     0.0
                                                56.9%                 4552 N.MUTUM--230  1  -134.9    23.4   135.9
                                                51.1%                 4562 SORRISO--230  1   119.0   -30.7   122.0
                                                52.6%                 4576 LUCAS RV  13  1    15.9     7.3    17.4 0.981*
 4576    1  0   1.000     0.0     0.0    15.9     0.0     0.0     0.0
 LUCAS RV  13   -87.2     0.0     0.0     6.1     0.0     0.0     0.0
                                                51.6%                 4572 LUCAS-RV-230  1   -15.9    -6.1    17.0
                                                 0.0%                 4909 LUCAS     69  1     0.0     0.0     0.0 1.000F        46
 4582  230  0   1.029     0.0     0.0     0.0     0.0    31.8     0.0
 SINOP----230   -92.0     0.0     0.0     0.0     0.0     0.0     0.0                                -21.2 SHL
                                                41.3%   -21.2         4562 SORRISO--230  1   -86.1    53.9    98.7
                                                86.4%                 4589 SINOPELN-FIC  1    86.1   -22.1    86.4
CEPEL - CENTRO DE PESQUISAS DE ENERGIA ELETRICA - PROGRAMA DE ANALISE DE REDES - V08MAR05A                                PAG. 400

ANUAL 06/07 * SETEMBRO 2006 PESADA S/SE 19H N/NE 19H * ANAT0 - FSE - C13
RELATORIO COMPLETO DO SISTEMA * AREA 45 * *       ENORTE (MATO GROSSO)       *

X----------------- D A D O S  -  B A R R A ------------------------X------------ F L U X O S  -  C I R C U I T O S ------------X
 DA BARRA      TENSAO GERACAO INJ EQV  CARGA   ELO CC  SHUNT    MOTOR
 NUM. KV TIPO   MOD/     MW/     MW/     MW/     MW/   Mvar/     MW/
     NOME       ANG     Mvar    Mvar    Mvar    Mvar   EQUIV    Mvar  PARA BARRA                    FLUXOS
                                                FLUXO % SHUNT L         NUM.     NOME     NC     MW    Mvar  MVA/V_d   TAP  DEFAS TIE
X------------X-------X-------X-------X-------X-------X-------X-------X----X------------X--X-------X-------X-------X------X-----X---X
```

```
 4583    1  0   1.000     0.0     0.0     0.0     0.0     0.0     0.0
 SINOP ELN138   -95.5     0.0     0.0     0.0     0.0     0.0     0.0
                                                 74.8%                 4589 SINOPELN-FIC  1   -74.8    -0.3    74.8
                                                  0.7%                 4933 SIN.CEMAT138  1    74.8     0.3    74.8               46
 4586    1  0   1.090     0.0     0.0    11.4     0.0    34.2     0.0
 SINOP----13.   -96.7     0.0     0.0     4.6     0.0     0.0     0.0
                                                 88.1%                 4589 SINOPELN-FIC  1   -11.4    29.6    29.1
 4589    1  0   1.049     0.0     0.0     0.0     0.0     0.0     0.0
 SINOPELN-FIC   -95.8     0.0     0.0     0.0     0.0     0.0     0.0
                                                 86.4%                 4582 SINOP----230  1   -86.1    28.4    86.4
                                                 71.3%                 4583 SINOP ELN138  1    74.8     0.0    71.3 1.049*
                                                 88.1%                 4586 SINOP----13.  1    11.4   -28.3    29.1
 4592  230  0   1.050     0.0     0.0     0.0     0.0     0.0     0.0
 MANSO----230   -64.3     0.0     0.0     0.0     0.0     0.0     0.0
                                                  1.6%                   21 MANSO----4GR  1  -173.0    -4.4   164.8 1.025F        01
                                                 68.9%                 4542 NOBRES---230  1   173.0     4.4   164.8
 4860    1  0   1.025     0.0     0.0     0.0     0.0     0.0     0.0
 JAURU---FIC    -49.5     0.0     0.0     0.0     0.0     0.0     0.0
                                                 85.1%                 4807 JAURU    138  1  -261.5    -0.4   255.3               46
                                                  0.0%                 4861 JAURU--13.8   1     0.0     0.0     0.0
                                                 85.1%                 4862 JAURU----230  1   261.5     0.4   255.3
 4861    1  0   1.025     0.0     0.0     0.0     0.0     0.0     0.0
 JAURU--13.8    -49.5     0.0     0.0     0.0     0.0     0.0     0.0
                                                  0.0%                 4860 JAURU---FIC   1     0.0     0.0     0.0
 4862    1  0   1.027     0.0     0.0     0.0     0.0     0.0     0.0
 JAURU----230   -53.7     0.0     0.0     0.0     0.0     0.0     0.0                                 -63.3 SHL
                                                 24.0%   -31.7         4532 COXIPO---230  1   130.8    -9.6   127.6
                                                 24.0%   -31.7         4532 COXIPO---230  2   130.8    -9.6   127.6
                                                 85.1%                 4860 JAURU---FIC   1  -261.5    19.2   255.3
CEPEL - CENTRO DE PESQUISAS DE ENERGIA ELETRICA - PROGRAMA DE ANALISE DE REDES - V08MAR05A                                PAG. 401

ANUAL 06/07 * SETEMBRO 2006 PESADA S/SE 19H N/NE 19H * ANAT0 - FSE - C13


TOTAIS DA AREA 45


X--------X--------X--------X--------X--------X--------X--------X--------X
  GERACAO  INJ EQV   CARGA   ELO CC    SHUNT   EXPORT   IMPORT   PERDAS
    MW/      MW/      MW/      MW/     Mvar/     MW/      MW/      MW/
   Mvar     Mvar     Mvar     Mvar     EQUIV    Mvar     Mvar     Mvar
X--------X--------X--------X--------X--------X--------X--------X--------X

    124.0      0.0     55.4      0.0    108.9    668.7    633.2     33.1
     -5.8      0.0     15.9      0.0      0.0    120.6    104.2     70.8
CEPEL - CENTRO DE PESQUISAS DE ENERGIA ELETRICA - PROGRAMA DE ANALISE DE REDES - V08MAR05A                                PAG. 402

ANUAL 06/07 * SETEMBRO 2006 PESADA S/SE 19H N/NE 19H * ANAT0 - FSE - C13
RELATORIO COMPLETO DO SISTEMA * AREA 46 * *               CEMAT              *

X----------------- D A D O S  -  B A R R A -------------------------X------------ F L U X O S  -  C I R C U I T O S ------------X
 DA BARRA      TENSAO GERACAO INJ EQV  CARGA   ELO CC  SHUNT    MOTOR
 NUM. KV TIPO   MOD/     MW/     MW/     MW/     MW/   Mvar/     MW/
     NOME       ANG     Mvar    Mvar    Mvar    Mvar   EQUIV    Mvar  PARA BARRA                    FLUXOS
                                                FLUXO % SHUNT L         NUM.     NOME     NC     MW    Mvar  MVA/V_d   TAP  DEFAS TIE
X------------X-------X-------X-------X-------X-------X-------X-------X----X------------X--X-------X-------X-------X------X-----X---X

 4611    1  0   0.970     0.0     0.0     5.6     0.0     0.0     0.0
 FERRONOR 138   -84.4     0.0     0.0     1.5     0.0     0.0     0.0
```

```
                                                  7.5%                 4513 C.MAGAL. 138  1    -5.6    -1.5     6.0                45
 4613    1  0   0.993     0.0     0.0     0.0     0.0     0.0     0.0
 PETROVIN 138   -80.2     0.0     0.0     0.0     0.0     0.0     0.0
                                                  0.1%                 4615 Petrovina 34  1     6.6     1.0     6.7
                                                  0.1%                 4619 ENG PETR 138  1    -6.6    -1.0     6.7
 4615    1  0   0.985     0.0     0.0     6.6     0.0     0.0     0.0
 Petrovina 34   -84.0     0.0     0.0     0.6     0.0     0.0     0.0
                                                  0.1%                 4613 PETROVIN 138  1    -6.6    -0.6     6.7
 4619    1  0   0.993     0.0     0.0     0.0     0.0     0.0     0.0
 ENG PETR 138   -80.1     0.0     0.0     0.0     0.0     0.0     0.0
                                                 32.3%                 4513 C.MAGAL. 138  1    29.7    -4.8    30.3                45
                                                  0.1%                 4613 PETROVIN 138  1     6.6     0.7     6.7
                                                 39.1%                 4623 RONDO CM 138  1   -36.3     4.1    36.8
 4623    1  0   1.015     0.0     0.0     0.0     0.0    -5.2     0.0
 RONDO CM 138   -75.1     0.0     0.0     0.0     0.0     0.0     0.0
                                                 68.1%                 4528 RONDON-2-AUX  1   -68.0   -12.2    68.1 1.007*         45
                                                 61.6%                 4529 RONDON   AUX  1   -61.5   -11.1    61.6 1.007*         45
                                                 40.0%                 4619 ENG PETR 138  1    37.6    -6.8    37.6
                                                 17.1%                 4624 SE ADM   138  1    12.4     3.5    12.7
                                                 57.0%                 4625 RONDON.2  13  1    13.9     4.2    14.3 0.977*
                                                 82.0%                 4626 RONDON.3  34  1    16.2     4.0    16.4 0.986*
                                                 80.1%                 4627 RONDON.1  13  1    15.8     4.0    16.0 1.007*
                                                  0.3%                 4633 RONDO CT 138  1    32.9    11.3    34.2
                                                  2.2%                 4643 JACIARA  138  1     0.9    -2.0     2.1
 4624    1  0   1.012     0.0     0.0    12.4     0.0     0.0     0.0
 SE ADM   138   -75.3     0.0     0.0     4.2     0.0     0.0     0.0
                                                 17.5%                 4623 RONDO CM 138  1   -12.4    -4.2    12.9
 4625    1  0   1.022     0.0     0.0    13.9     0.0     0.0     0.0
 RONDON.2  13   -78.7     0.0     0.0     3.2     0.0     0.0     0.0
                                                 55.7%                 4623 RONDO CM 138  1   -13.9    -3.2    13.9
 4626    1  0   1.014     0.0     0.0    16.2     0.0     0.0     0.0
 RONDON.3  34   -79.3     0.0     0.0     2.8     0.0     0.0     0.0
                                                 80.9%                 4623 RONDO CM 138  1   -16.2    -2.8    16.2
 4627    1  0   0.993     0.0     0.0    15.8     0.0     0.0     0.0
 RONDON.1  13   -79.0     0.0     0.0     2.9     0.0     0.0     0.0
                                                 80.7%                 4623 RONDO CM 138  1   -15.8    -2.9    16.1
```



```
X----------------- D A D O S  -  B A R R A ------------------------X------------ F L U X O S  -  C I R C U I T O S ------------X
 DA BARRA      TENSAO GERACAO INJ EQV  CARGA   ELO CC  SHUNT    MOTOR
 NUM. KV TIPO   MOD/     MW/     MW/     MW/     MW/   Mvar/     MW/
     NOME       ANG     Mvar    Mvar    Mvar    Mvar   EQUIV    Mvar  PARA BARRA                    FLUXOS
                                                FLUXO % SHUNT L         NUM.     NOME     NC     MW    Mvar  MVA/V_d   TAP  DEFAS TIE
X------------X-------X-------X-------X-------X-------X-------X-------X----X------------X--X-------X-------X-------X------X-----X---X

 4633    1  0   1.008     0.0     0.0     0.0     0.0     0.0     0.0
 RONDO CT 138   -75.5     0.0     0.0     0.0     0.0     0.0     0.0
                                                  0.3%                 4623 RONDO CM 138  1   -32.7   -11.6    34.4
                                                 21.2%                 4634 SE BUNGE 138  1    14.8     5.5    15.7
                                                 93.8%                 4636 RONDON CT 13  1    17.9     6.2    18.8 0.986*
 4634    1  0   1.006     0.0     0.0    14.8     0.0     0.0     0.0
 SE BUNGE 138   -75.6     0.0     0.0     5.8     0.0     0.0     0.0
                                                 21.3%                 4633 RONDO CT 138  1   -14.8    -5.8    15.8
 4636    1  0   0.999     0.0     0.0    17.9     0.0     0.0     0.0
 RONDON CT 13   -79.8     0.0     0.0     4.7     0.0     0.0     0.0
                                                 92.5%                 4633 RONDO CT 138  1   -17.9    -4.7    18.5
 4643    1  0   1.014     0.0     0.0     0.0     0.0     0.0     0.0
```

```
 JACIARA  138   -75.2     0.0     0.0     0.0     0.0     0.0     0.0
                                                 9.8%                 4533 COXIPO   138  1    -9.3    -0.1     9.2                45
                                                 3.0%                 4623 RONDO CM 138  1    -0.9    -2.7     2.8
                                                41.5%                 4646 JACIARA   13  1    10.1     2.8    10.4 1.007*
 4646    1  0   0.996     0.0     0.0    10.1     0.0     0.0     0.0
 JACIARA   13   -77.7     0.0     0.0     2.3     0.0     0.0     0.0
                                                41.8%                 4643 JACIARA  138  1   -10.1    -2.3    10.4
 4653    1  0   1.033     0.0     0.0     0.0     0.0     0.0     0.0
 B.GARCAS 138   -81.6     0.0     0.0     0.0     0.0     0.0     0.0
                                                 0.3%                 4503 B.PEIXE  138  1   -27.2     9.1    27.7                45
                                                82.5%                 4656 B.GARCAS  13  1    16.7     3.4    16.5 1.015*
                                                 0.2%                 4663 N.XAVANT 138  1    10.5   -12.5    15.8
 4656    1  0   1.005     0.0     0.0    16.7     0.0     0.0     0.0
 B.GARCAS  13   -86.1     0.0     0.0     2.0     0.0     0.0     0.0
                                                83.7%                 4653 B.GARCAS 138  1   -16.7    -2.0    16.7
 4663    1  0   1.046     0.0     0.0     0.0     0.0     0.0     0.0
 N.XAVANT 138   -84.3     0.0     0.0     0.0     0.0     0.0     0.0
                                                 0.1%                 4653 B.GARCAS 138  1   -10.2     2.9    10.2
                                                 0.0%                 4666 N.XAVANT. 13  1     0.0     2.9     2.8 1.000F
                                                 0.1%                 4673 AGUA BOA 138  1    10.2    -5.8    11.3
 4666    1  1   1.020     4.0     0.0     4.0     0.0     0.0     0.0
 N.XAVANT. 13   -84.2    -1.2     0.0     1.7     0.0     0.0     0.0
                                                 0.0%                 4663 N.XAVANT 138  1     0.0    -2.9     2.8
CEPEL - CENTRO DE PESQUISAS DE ENERGIA ELETRICA - PROGRAMA DE ANALISE DE REDES - V08MAR05A                                PAG. 404

ANUAL 06/07 * SETEMBRO 2006 PESADA S/SE 19H N/NE 19H * ANAT0 - FSE - C13
RELATORIO COMPLETO DO SISTEMA * AREA 46 * *              CEMAT             *

X----------------- D A D O S  -  B A R R A ------------------------X------------ F L U X O S  -  C I R C U I T O S ------------X
 DA BARRA      TENSAO GERACAO INJ EQV  CARGA   ELO CC  SHUNT    MOTOR
 NUM. KV TIPO   MOD/     MW/     MW/     MW/     MW/   Mvar/     MW/
     NOME       ANG     Mvar    Mvar    Mvar    Mvar   EQUIV    Mvar  PARA BARRA                    FLUXOS
                                                FLUXO % SHUNT L         NUM.     NOME     NC      MW    Mvar  MVA/V_d   TAP  DEFAS TIE
X------------X-------X-------X-------X-------X-------X-------X-------X----X------------X--X-------X-------X-------X------X-----X---X

 4673    1  0   1.045     0.0     0.0     0.0     0.0     0.0     0.0
 AGUA BOA 138   -85.4     0.0     0.0     0.0     0.0     0.0     0.0
                                                 0.1%                 4663 N.XAVANT 138  1   -10.2     0.8     9.8
                                                38.2%                 4676 AGUA BOA  13  1     4.7     0.8     4.6 1.000F
                                                 0.1%                 4683 CANARANA 138  1     5.5    -1.6     5.4
 4676    1  0   1.038     0.0     0.0     4.7     0.0     0.0     0.0
 AGUA BOA  13   -87.7     0.0     0.0     0.6     0.0     0.0     0.0
                                                38.2%                 4673 AGUA BOA 138  1    -4.7    -0.6     4.6
 4683    1  0   1.040     0.0     0.0     0.0     0.0     0.0     0.0
 CANARANA 138   -85.8     0.0     0.0     0.0     0.0     0.0     0.0
                                                 0.1%                 4673 AGUA BOA 138  1    -5.4    -2.6     5.8
                                                57.8%                 4686 Canarana  13  1     5.4     2.6     5.8 1.000F
 4686    1  0   1.021     0.0     0.0     5.4     0.0     0.0     0.0
 Canarana  13   -88.2     0.0     0.0     2.3     0.0     0.0     0.0
                                                57.8%                 4683 CANARANA 138  1    -5.4    -2.3     5.8
 4703    1  0   1.009     0.0     0.0     0.0     0.0     0.0     0.0
 CUIABA   138   -73.9     0.0     0.0     0.0     0.0     0.0     0.0
                                                58.8%                 4533 COXIPO   138  1   -40.4    -6.6    40.6                45
                                                58.8%                 4533 COXIPO   138  2   -40.4    -6.6    40.6                45
                                                85.6%                 4706 CUIABA 1  13  1    16.8     4.0    17.1 0.999*
                                                84.2%                 4707 CUIABA 2  13  1    16.8     2.6    16.8 1.005*
                                                86.4%                 4708 CUIABA 3  13  1    16.8     4.7    17.3 0.996*
                                                68.8%                 4709 CUIABA 4  13  1    17.0     3.6    17.2 0.991*
                                                23.4%                 4753 CASCA 3  138  1    13.4    -1.6    13.4
 4706    1  0   0.995     0.0     0.0    16.8     0.0     0.0     0.0
```

```
 CUIABA 1  13   -78.2     0.0     0.0     2.7     0.0     0.0     0.0
                                              85.5%                 4703 CUIABA   138  1   -16.8    -2.7    17.1
 4707    1  0   0.995     0.0     0.0    16.8     0.0     0.0     0.0
 CUIABA 2  13   -78.2     0.0     0.0     1.3     0.0     0.0     0.0
                                              84.7%                 4703 CUIABA   138  1   -16.8    -1.3    16.9
 4708    1  0   0.995     0.0     0.0    16.8     0.0     0.0     0.0
 CUIABA 3  13   -78.2     0.0     0.0     3.4     0.0     0.0     0.0
                                              86.1%                 4703 CUIABA   138  1   -16.8    -3.4    17.2
 4709    1  0   1.004     0.0     0.0    17.0     0.0     0.0     0.0
 CUIABA 4  13   -78.4     0.0     0.0     2.2     0.0     0.0     0.0
                                              68.2%                 4703 CUIABA   138  1   -17.0    -2.2    17.1
CEPEL - CENTRO DE PESQUISAS DE ENERGIA ELETRICA - PROGRAMA DE ANALISE DE REDES - V08MAR05A                                PAG. 405

ANUAL 06/07 * SETEMBRO 2006 PESADA S/SE 19H N/NE 19H * ANAT0 - FSE - C13
RELATORIO COMPLETO DO SISTEMA * AREA 46 * *              CEMAT             *

X------------------ D A D O S  -  B A R R A -------------------------X------------- F L U X O S  -  C I R C U I T O S -------------X
 DA BARRA      TENSAO GERACAO INJ EQV  CARGA   ELO CC  SHUNT    MOTOR
 NUM. KV TIPO   MOD/     MW/     MW/     MW/     MW/   Mvar/     MW/
     NOME       ANG     Mvar    Mvar    Mvar    Mvar   EQUIV    Mvar  PARA BARRA                    FLUXOS
                                                FLUXO % SHUNT L         NUM.     NOME     NC     MW    Mvar  MVA/V_d   TAP  DEFAS TIE
X------------X-------X-------X-------X-------X-------X-------X-------X----X------------X--X-------X-------X-------X------X-----X---X

 4713    1  0   1.010     0.0     0.0     0.0     0.0     0.0     0.0
 V.GRANDE 138   -74.1     0.0     0.0     0.0     0.0     0.0     0.0
                                              21.9%                 4533 COXIPO   138  1   -29.2    -2.3    29.0                45
                                               0.7%                 4593 EPE------138  1   -75.5    -1.8    74.8                41
                                              90.4%                 4716 V.GRANDE1 13  1    18.1     2.5    18.1 1.012*
                                              91.0%                 4717 V.GRANDE2 13  1    16.9     7.2    18.2 0.988*
                                              70.1%                 4718 V.GRANDE3 13  1    17.0     4.8    17.5 0.998*
                                              15.5%                 4723 C.ALTA   138  1    20.4     2.1    20.3
                                              25.8%                 4783 CRISTO R.138  1    20.4    -4.5    20.7
                                              15.6%                 4893 POCONE   138  1    11.9    -8.0    14.2
 4716    1  0   0.990     0.0     0.0    18.1     0.0     0.0     0.0
 V.GRANDE1 13   -79.2     0.0     0.0     0.9     0.0     0.0     0.0
                                              91.4%                 4713 V.GRANDE 138  1   -18.1    -0.9    18.3
 4717    1  0   0.992     0.0     0.0    16.9     0.0     0.0     0.0
 V.GRANDE2 13   -78.7     0.0     0.0     5.6     0.0     0.0     0.0
                                              89.9%                 4713 V.GRANDE 138  1   -16.9    -5.6    18.0
 4718    1  0   0.992     0.0     0.0    17.0     0.0     0.0     0.0
 V.GRANDE3 13   -78.8     0.0     0.0     3.3     0.0     0.0     0.0
                                              70.0%                 4713 V.GRANDE 138  1   -17.0    -3.3    17.5
 4723    1  0   1.003     0.0     0.0     0.0     0.0     0.0     0.0
 C.ALTA   138   -75.1     0.0     0.0     0.0     0.0     0.0     0.0
                                              15.6%                 4713 V.GRANDE 138  1   -20.3    -3.0    20.4
                                              78.2%                 4726 C.ALTA1   13  1    15.6     2.0    15.6 1.005*
                                              78.5%                 4727 C.ALTA2   13  1    15.6     2.1    15.7 1.001*
                                              79.9%                 4728 C.ALTA3   13  1    15.6     3.6    16.0 0.993*
                                              35.1%                 4749 ENG.RODOV138  1   -46.0    -4.1    46.0
                                              21.3%                 4803 NOBRES   138  1    19.5    -0.7    19.4
 4726    1  0   0.992     0.0     0.0    15.6     0.0     0.0     0.0
 C.ALTA1   13   -79.0     0.0     0.0     1.0     0.0     0.0     0.0
                                              78.5%                 4723 C.ALTA   138  1   -15.6    -1.0    15.7
 4727    1  0   0.995     0.0     0.0    15.6     0.0     0.0     0.0
 C.ALTA2   13   -79.4     0.0     0.0     0.9     0.0     0.0     0.0
                                              78.6%                 4723 C.ALTA   138  1   -15.6    -0.9    15.7
 4728    1  0   0.996     0.0     0.0    15.6     0.0     0.0     0.0
 C.ALTA3   13   -79.4     0.0     0.0     2.4     0.0     0.0     0.0
                                              79.3%                 4723 C.ALTA   138  1   -15.6    -2.4    15.9
CEPEL - CENTRO DE PESQUISAS DE ENERGIA ELETRICA - PROGRAMA DE ANALISE DE REDES - V08MAR05A                                PAG. 406
```

```
ANUAL 06/07 * SETEMBRO 2006 PESADA S/SE 19H N/NE 19H * ANAT0 - FSE - C13
RELATORIO COMPLETO DO SISTEMA * AREA 46 * *              CEMAT              *

X----------------- D A D O S  -  B A R R A -------------------------X------------ F L U X O S  -  C I R C U I T O S ------------X
 DA BARRA      TENSAO GERACAO INJ EQV  CARGA   ELO CC  SHUNT    MOTOR
 NUM. KV TIPO   MOD/     MW/     MW/     MW/     MW/   Mvar/     MW/
     NOME       ANG     Mvar    Mvar    Mvar    Mvar   EQUIV    Mvar  PARA BARRA                    FLUXOS
                                                FLUXO % SHUNT L         NUM.     NOME     NC     MW    Mvar  MVA/V_d   TAP  DEFAS TIE
X------------X-------X-------X-------X-------X-------X-------X-------X----X------------X--X-------X-------X-------X------X-----X---X

 4733    1  0   1.011     0.0     0.0     0.0     0.0     0.0     0.0
 CPA      138   -73.7     0.0     0.0     0.0     0.0     0.0     0.0
                                                23.1%                   4533 COXIPO   138  1   -23.0    -4.1    23.1              45
                                                23.1%                   4533 COXIPO   138  2   -23.0    -4.1    23.1              45
                                                 0.3%                   4593 EPE------138  1   -31.2    -1.2    30.9              41
                                                59.8%                   4736 CPA  s1   13  1    12.1    -0.2    12.0 1.000F
                                                65.1%                   4749 ENG.RODOV138  1    65.1     9.7    65.1
 4736    1  0   1.020     0.0     0.0    12.1     0.0     3.7     0.0
 CPA  s1   13   -80.2     0.0     0.0     2.2     0.0     0.0     0.0
                                                59.8%                   4733 CPA      138  1   -12.1     1.6    12.0
 4743    1  0   1.006     0.0     0.0     0.0     0.0     0.0     0.0
 RODOVIAR 138   -74.3     0.0     0.0     0.0     0.0     0.0     0.0
                                                78.6%                   4746 RODOVIAR  13  1    18.8     6.1    19.7 0.985*
                                                34.5%                   4749 ENG.RODOV138  1   -18.8    -6.1    19.7
 4746    1  0   0.997     0.0     0.0    18.8     0.0     0.0     0.0
 RODOVIAR  13   -79.4     0.0     0.0     4.3     0.0     0.0     0.0
                                                77.5%                   4743 RODOVIAR 138  1   -18.8    -4.3    19.4
 4749    1  0   1.009     0.0     0.0     0.0     0.0     0.0     0.0
 ENG.RODOV138   -74.1     0.0     0.0     0.0     0.0     0.0     0.0
                                                35.0%                   4723 C.ALTA   138  1    46.2     3.8    45.9
                                                65.1%                   4733 CPA      138  1   -65.0    -9.6    65.1
                                                34.3%                   4743 RODOVIAR 138  1    18.9     5.9    19.6
 4753    1  0   0.993     0.0     0.0     5.0     0.0     0.0     0.0
 CASCA 3  138   -75.5     0.0     0.0     0.4     0.0     0.0     0.0
                                                24.0%                   4703 CUIABA   138  1   -13.2    -3.2    13.7
                                            SUP 142.9%                  4757 CASCA3 G 6.9  1   -14.2     0.1    14.3 1.000F
                                                 0.2%                   4763 C. VERDE 138  1    22.4     2.7    22.7
 4754    1  0   1.001     0.0     0.0     1.3     0.0     0.0     0.0
 CASCA 2   34   -68.5     0.0     0.0     0.5     0.0     0.0     0.0
                                                 0.0%                   4757 CASCA3 G 6.9  1     2.2     0.0     2.2
                                                70.6%                   4758 CASCA2 G 2.4  1    -3.5    -0.5     3.5 1.000F
 4755    1  0   1.000     0.0     0.0     0.0     0.0     0.0     0.0
 CASCA 3   34   -68.6     0.0     0.0     0.0     0.0     0.0     0.0
                                                 0.0%                   4757 CASCA3 G 6.9  1     0.0     0.0     0.0 1.000F
 4757    1  1   1.000    12.0     0.0     0.0     0.0     0.0     0.0
 CASCA3 G 6.9   -68.6     1.6     0.0     0.0     0.0     0.0     0.0
                                            SUP 142.9%                  4753 CASCA 3  138  1    14.2     1.7    14.3
                                                 0.0%                   4754 CASCA 2   34  1    -2.2    -0.1     2.2
                                                 0.0%                   4755 CASCA 3   34  1     0.0     0.0     0.0
CEPEL - CENTRO DE PESQUISAS DE ENERGIA ELETRICA - PROGRAMA DE ANALISE DE REDES - V08MAR05A                                PAG. 407

ANUAL 06/07 * SETEMBRO 2006 PESADA S/SE 19H N/NE 19H * ANAT0 - FSE - C13
RELATORIO COMPLETO DO SISTEMA * AREA 46 * *              CEMAT              *

X----------------- D A D O S  -  B A R R A -------------------------X------------ F L U X O S  -  C I R C U I T O S ------------X
 DA BARRA      TENSAO GERACAO INJ EQV  CARGA   ELO CC  SHUNT    MOTOR
 NUM. KV TIPO   MOD/     MW/     MW/     MW/     MW/   Mvar/     MW/
     NOME       ANG     Mvar    Mvar    Mvar    Mvar   EQUIV    Mvar  PARA BARRA                    FLUXOS
                                                FLUXO % SHUNT L         NUM.     NOME     NC     MW    Mvar  MVA/V_d   TAP  DEFAS TIE
```

```
X------------X-------X-------X-------X-------X-------X-------X-------X----X------------X--X-------X-------X-------X------X-----X---X

 4758    1  1   1.010     3.5     0.0     0.0     0.0     0.0     0.0
 CASCA2 G 2.4   -65.6     0.7     0.0     0.0     0.0     0.0     0.0
                                              70.6%                    4754 CASCA 2   34  1     3.5     0.7     3.5
 4763    1  0   0.977     0.0     0.0     0.0     0.0     0.0     0.0
 C. VERDE 138   -76.8     0.0     0.0     0.0     0.0     0.0     0.0
                                               0.2%                    4753 CASCA 3  138  1   -22.2    -5.0    23.2
                                              50.2%                    4766 C. VERDE  13  1    11.5     4.2    12.5 0.953*
                                               0.1%                    4773 PRIMAVER 138  1    10.7     0.8    10.9
 4766    1  0   1.007     0.0     0.0    11.5     0.0     0.0     0.0
 C. VERDE  13   -79.9     0.0     0.0     3.5     0.0     0.0     0.0
                                              47.8%                    4763 C. VERDE 138  1   -11.5    -3.5    11.9
 4773    1  0   0.954     0.0     0.0     0.0     0.0     0.0     0.0
 PRIMAVER 138   -78.2     0.0     0.0     0.0     0.0     0.0     0.0
                                               0.1%                    4763 C. VERDE 138  1   -10.5    -6.3    12.8
                                              51.3%                    4776 PRIMAVERA 13  1    10.5     6.3    12.8 0.932*
 4776    1  1   0.995     8.0     0.0    18.5     0.0     0.0     0.0
 PRIMAVERA 13   -81.1     2.0     0.0     7.6     0.0     0.0     0.0
                                              47.8%                    4773 PRIMAVER 138  1   -10.5    -5.6    12.0
 4783    1  0   1.009     0.0     0.0     0.0     0.0     0.0     0.0
 CRISTO R.138   -74.4     0.0     0.0     0.0     0.0     0.0     0.0
                                              25.7%                    4713 V.GRANDE 138  1   -20.3     4.0    20.6
                                              82.2%                    4786 CRISTO R. 13  1    20.3    -4.0    20.6 1.029*
 4786    1  0   1.002     0.0     0.0    20.3     0.0     7.2     0.0
 CRISTO R. 13   -79.5     0.0     0.0     1.3     0.0     0.0     0.0
                                              84.6%                    4783 CRISTO R.138  1   -20.3     5.9    21.2
 4796    1  0   0.995     0.0     0.0    14.4     0.0     0.0     0.0
 COXIPO 1  13   -76.9     0.0     0.0     3.6     0.0     0.0     0.0
                                              59.7%                    4533 COXIPO   138  1   -14.4    -3.6    14.9               45
 4797    1  0   0.996     0.0     0.0    14.4     0.0     0.0     0.0
 COXIPO 2  13   -77.3     0.0     0.0     3.8     0.0     0.0     0.0
                                              59.9%                    4533 COXIPO   138  1   -14.4    -3.8    15.0               45
 4801    1  0   0.970     0.0     0.0     9.5     0.0     0.0     0.0
 FCIMENTO 138   -78.3     0.0     0.0     3.1     0.0     0.0     0.0
                                               0.1%                    4803 NOBRES   138  1    -9.5    -3.1    10.3
```





```
X----------------- D A D O S  -  B A R R A ------------------------X------------ F L U X O S  -  C I R C U I T O S ------------X
 DA BARRA      TENSAO GERACAO INJ EQV  CARGA   ELO CC  SHUNT    MOTOR
 NUM. KV TIPO   MOD/     MW/     MW/     MW/     MW/   Mvar/     MW/
     NOME       ANG     Mvar    Mvar    Mvar    Mvar   EQUIV    Mvar  PARA BARRA                    FLUXOS
                                                FLUXO % SHUNT L         NUM.     NOME     NC     MW    Mvar  MVA/V_d   TAP  DEFAS TIE
X------------X-------X-------X-------X-------X-------X-------X-------X----X------------X--X-------X-------X-------X------X-----X---X

 4803    1  0   0.973     0.0     0.0     0.0     0.0     0.0     0.0
 NOBRES   138   -78.2     0.0     0.0     0.0     0.0     0.0     0.0
                                              22.1%                    4723 C.ALTA   138  1   -19.0    -4.9    20.1
                                               0.1%                    4801 FCIMENTO 138  1     9.5     2.2    10.0
                                              78.4%                    4806 NOBRES    13  1     7.5     1.3     7.8 0.976*
                                               0.1%                    4813 DIAMANTI 138  1     8.2     2.1     8.7
                                               7.1%                    4823 DENISE   138  1    -6.3    -0.7     6.5
 4806    1  0   0.992     0.0     0.0     7.5     0.0     0.0     0.0
 NOBRES    13   -80.2     0.0     0.0     1.0     0.0     0.0     0.0
                                              76.5%                    4803 NOBRES   138  1    -7.5    -1.0     7.7
 4807    1  0   1.010     0.0     0.0     0.0     0.0     0.0     0.0
 JAURU    138   -50.0     0.0     0.0     0.0     0.0     0.0     0.0
```

```
                                                 32.1%                 4805 GUAP1----138  1   -44.4    -9.8    45.0                41
                                                 32.1%                 4805 GUAP1----138  2   -44.4    -9.8    45.0                41
                                                 48.2%                 4808 UHEJAURU-138  1   -47.8    -9.0    48.2                41
                                                 48.2%                 4808 UHEJAURU-138  2   -47.8    -9.0    48.2                41
                                                 99.0%                 4810 Pch INDIA 13  1   -72.2    34.5    79.2
                                                 86.3%                 4860 JAURU---FIC   1   261.5    -2.0   258.9 0.986*         45
                                                  8.6%                 4863 ARAPUT-1-138  1     9.2    -0.2     9.1
                                                 23.1%                 4873 PLACER-1-138  1   -14.2     5.3    15.0
 4810    1  1   1.010    28.0     0.0     0.0     0.0     0.0     0.0
 Pch INDIA 13   -47.4   -11.5     0.0     0.0     0.0     0.0     0.0
                                                 99.7%                 4807 JAURU    138  1    73.7   -32.6    79.7
                                                 62.2%                 4812 PCH OMBR 138  1   -45.7    21.0    49.8
 4812    1  1   1.010    26.0     0.0     0.0     0.0     0.0     0.0
 PCH OMBR 138   -46.7   -12.2     0.0     0.0     0.0     0.0     0.0
                                                 62.6%                 4810 Pch INDIA 13  1    45.9   -21.1    50.0
                                                 27.0%                 4867 Pch AJaur138  1   -19.9     8.9    21.6
 4813    1  0   0.965     0.0     0.0     0.0     0.0     0.0     0.0
 DIAMANTI 138   -78.6     0.0     0.0     0.0     0.0     0.0     0.0
                                                  0.1%                 4803 NOBRES   138  1    -8.2    -4.5     9.7
                                                 48.4%                 4814 DIAMANTI  69  1     8.2     4.5     9.7 0.958*
 4814    1  0   0.996     0.0     0.0     0.0     0.0     0.0     0.0
 DIAMANTI  69   -79.8     0.0     0.0     0.0     0.0     0.0     0.0
                                                 46.3%                 4813 DIAMANTI 138  1    -8.2    -4.2     9.3
                                                 92.7%                 4816 DIAMANTI  13  1     8.2     4.2     9.3 0.962*
 4816    1  0   1.000     0.0     0.0     8.2     0.0     0.0     0.0
 DIAMANTI  13   -84.0     0.0     0.0     3.5     0.0     0.0     0.0
                                                 89.2%                 4814 DIAMANTI  69  1    -8.2    -3.5     8.9
CEPEL - CENTRO DE PESQUISAS DE ENERGIA ELETRICA - PROGRAMA DE ANALISE DE REDES - V08MAR05A                                PAG. 409

ANUAL 06/07 * SETEMBRO 2006 PESADA S/SE 19H N/NE 19H * ANAT0 - FSE - C13
RELATORIO COMPLETO DO SISTEMA * AREA 46 * *              CEMAT             *

X----------------- D A D O S  -  B A R R A ------------------------X------------ F L U X O S  -  C I R C U I T O S ------------X
 DA BARRA       TENSAO GERACAO INJ EQV  CARGA   ELO CC  SHUNT    MOTOR
 NUM. KV TIPO   MOD/     MW/     MW/     MW/     MW/   Mvar/     MW/
     NOME       ANG     Mvar    Mvar    Mvar    Mvar   EQUIV    Mvar  PARA BARRA                    FLUXOS
                                                FLUXO % SHUNT L         NUM.     NOME     NC     MW    Mvar  MVA/V_d   TAP  DEFAS TIE
X------------X-------X-------X-------X-------X-------X-------X-------X----X------------X--X-------X-------X-------X------X-----X---X

 4820    1  0   0.983     0.0     0.0     0.0     0.0     0.0     0.0
 B.BUGRES  69   -79.5     0.0     0.0     0.0     0.0     0.0     0.0
                                                  0.1%                 4824 DENISE    69  1    -6.6    -1.8     6.9
                                                 57.9%                 4828 B.BUGRES  13  1     6.6     1.8     6.9 0.971*
 4821    1  0   0.998     0.0     0.0     0.0     0.0     0.0     0.0
 N.OLIMPIA 69   -78.4     0.0     0.0     0.0     0.0     0.0     0.0
                                                  0.0%                 4824 DENISE    69  1    -2.7    -1.2     2.9
                                                 58.9%                 4827 N.OLIMPIA 13  1     2.7     1.2     2.9 0.965*
 4823    1  0   0.976     0.0     0.0     0.0     0.0     0.0     0.0
 DENISE   138   -77.1     0.0     0.0     0.0     0.0     0.0     0.0
                                                  8.6%                 4803 NOBRES   138  1     6.3    -4.3     7.8
                                                 64.1%                 4829 DENISE   FIC  1    12.0     3.7    12.8 0.968*
                                                 17.7%                 4833 TANGARA  138  1   -18.3     0.7    18.7
 4824    1  0   1.003     0.0     0.0     0.0     0.0     0.0     0.0
 DENISE    69   -78.2     0.0     0.0     0.0     0.0     0.0     0.0
                                                  0.1%                 4820 B.BUGRES  69  1     6.7     1.3     6.8
                                                  0.0%                 4821 N.OLIMPIA 69  1     2.7     1.0     2.8
                                                 13.1%                 4826 DENISE  T 13  1     0.6     0.2     0.7 1.000F
                                                 51.3%                 4829 DENISE   FIC  1   -10.0    -2.6    10.3
 4826    1  0   1.000     0.0     0.0     2.6     0.0     0.0     0.0
 DENISE  T 13   -78.6     0.0     0.0     1.1     0.0     0.0     0.0
```

```
                                                 13.1%                 4824 DENISE    69  1    -0.6    -0.2     0.7
                                                 36.2%                 4829 DENISE   FIC  1    -2.0    -0.9     2.2
 4827    1  0   1.020     0.0     0.0     2.7     0.0     0.0     0.0
 N.OLIMPIA 13   -80.1     0.0     0.0     1.1     0.0     0.0     0.0
                                                 56.8%                 4821 N.OLIMPIA 69  1    -2.7    -1.1     2.8
 4828    1  0   0.998     0.0     0.0     6.6     0.0     0.0     0.0
 B.BUGRES  13   -82.9     0.0     0.0     1.4     0.0     0.0     0.0
                                                 56.2%                 4820 B.BUGRES  69  1    -6.6    -1.4     6.7
 4829    1  0   1.003     0.0     0.0     0.0     0.0     0.0     0.0
 DENISE   FIC   -78.3     0.0     0.0     0.0     0.0     0.0     0.0
                                                 62.0%                 4823 DENISE   138  1   -12.0    -3.4    12.4
                                                 51.3%                 4824 DENISE    69  1    10.0     2.5    10.3
                                                 36.2%                 4826 DENISE  T 13  1     2.0     0.9     2.2
 4833    1  0   0.990     0.0     0.0     0.0     0.0     0.0     0.0
 TANGARA  138   -76.3     0.0     0.0     0.0     0.0     0.0     0.0
                                                 18.2%                 4823 DENISE   138  1    18.6    -4.4    19.3
                                                 70.2%                 4836 TANGARA   13  1    17.1     3.3    17.6 0.980*
                                                 34.0%                 4843 ITAMARATI138  1   -35.6     1.1    36.0
CEPEL - CENTRO DE PESQUISAS DE ENERGIA ELETRICA - PROGRAMA DE ANALISE DE REDES - V08MAR05A                          PAG. 410

ANUAL 06/07 * SETEMBRO 2006 PESADA S/SE 19H N/NE 19H * ANAT0 - FSE - C13
RELATORIO COMPLETO DO SISTEMA * AREA 46 * *                CEMAT             *

X----------------- D A D O S  -  B A R R A -------------------------X------------ F L U X O S  -  C I R C U I T O S ------------X
 DA BARRA      TENSAO GERACAO INJ EQV  CARGA   ELO CC  SHUNT    MOTOR
 NUM. KV TIPO   MOD/     MW/     MW/     MW/     MW/   Mvar/     MW/
     NOME       ANG     Mvar    Mvar    Mvar    Mvar   EQUIV    Mvar  PARA BARRA                    FLUXOS
                                                FLUXO % SHUNT L         NUM.     NOME     NC     MW    Mvar  MVA/V_d   TAP  DEFAS TIE
X------------X-------X-------X-------X-------X-------X-------X-------X----X------------X--X-------X-------X-------X------X-----X---X

 4836    1  0   0.998     0.0     0.0    17.1     0.0     0.0     0.0
 TANGARA   13   -81.0     0.0     0.0     1.9     0.0     0.0     0.0
                                                 68.8%                 4833 TANGARA  138  1   -17.1    -1.9    17.2
 4840    1  1   1.051    13.0     0.0     0.0     0.0     0.0     0.0
 PCH BARU 138   -71.7     2.3     0.0     0.0     0.0     0.0     0.0
                                                  0.1%                 4842 C.NOVO   138  1    13.0     2.3    12.6
 4841    1  0   1.023     0.0     0.0     0.0     0.0     0.0     0.0
 JUBA 1   138   -68.5     0.0     0.0     0.0     0.0     0.0     0.0
                                                 41.3%                 4843 ITAMARATI138  1    42.7   -13.7    43.8
                                                 92.5%                 4846 JUBA-----7GR  1   -72.0    23.3    74.0 1.000F
                                                 28.4%                 4853 Q.MARCOS 138  1    29.3    -9.6    30.2
 4842    1  0   1.031     0.0     0.0     7.4     0.0     0.0     0.0
 C.NOVO   138   -73.1     0.0     0.0     0.9     0.0     0.0     0.0
                                                  0.1%                 4840 PCH BARU 138  1   -12.9    -8.2    14.8
                                                  7.6%                 4843 ITAMARATI138  1    -3.3     5.3     6.1
                                                 10.9%                 4845 SE MAGGI 138  1     8.8     1.9     8.7
 4843    1  0   1.018     0.0     0.0     0.0     0.0     0.0     0.0
 ITAMARATI138   -72.4     0.0     0.0     0.0     0.0     0.0     0.0
                                                 34.2%                 4833 TANGARA  138  1    36.8    -3.1    36.2
                                                 40.3%                 4841 JUBA 1   138  1   -41.6    12.6    42.7
                                                 13.2%                 4842 C.NOVO   138  1     3.3   -10.2    10.6
                                                  8.0%                 4844 ITAMARATI 69  1     1.5     0.7     1.6 0.966*
 4844    1  0   1.049     0.0     0.0     1.5     0.0     0.0     0.0
 ITAMARATI 69   -73.0     0.0     0.0     0.7     0.0     0.0     0.0
                                                  7.7%                 4843 ITAMARATI138  1    -1.5    -0.7     1.5
 4845    1  0   1.008     0.0     0.0     0.0     0.0     0.0     0.0
 SE MAGGI 138   -74.1     0.0     0.0     0.0     0.0     0.0     0.0
                                                 14.8%                 4842 C.NOVO   138  1    -8.7    -8.3    11.9
                                                 25.9%                 4847 BRASNORT-138  1    18.3    10.1    20.7
                                                 12.2%                 4880 SAPEZAL--138  1    -9.7    -1.8     9.7
```

```
 4846    1  1   1.000    72.0     0.0     0.0     0.0     0.0     0.0
 JUBA-----7GR   -63.9   -17.0     0.0     0.0     0.0     0.0     0.0
                                                 92.5%                 4841 JUBA 1   138  1    72.0   -17.0    74.0
 4847    1  0   0.967     0.0     0.0     2.1     0.0    -9.4     0.0
 BRASNORT-138   -75.7     0.0     0.0     1.8     0.0     0.0     0.0
                                                 29.4%                 4845 SE MAGGI 138  1   -17.9   -14.0    23.5
                                                 20.8%                 4848 FAZ.CORT-138  1    15.8     2.8    16.6
CEPEL - CENTRO DE PESQUISAS DE ENERGIA ELETRICA - PROGRAMA DE ANALISE DE REDES - V08MAR05A                                PAG. 411

ANUAL 06/07 * SETEMBRO 2006 PESADA S/SE 19H N/NE 19H * ANAT0 - FSE - C13
RELATORIO COMPLETO DO SISTEMA * AREA 46 * *              CEMAT             *

X----------------- D A D O S  -  B A R R A -------------------------X------------ F L U X O S  -  C I R C U I T O S ------------X
 DA BARRA      TENSAO GERACAO INJ EQV  CARGA   ELO CC  SHUNT    MOTOR
 NUM. KV TIPO   MOD/     MW/     MW/     MW/     MW/   Mvar/     MW/
     NOME       ANG     Mvar    Mvar    Mvar    Mvar   EQUIV    Mvar  PARA BARRA                    FLUXOS
                                                FLUXO % SHUNT L         NUM.     NOME     NC     MW    Mvar  MVA/V_d   TAP  DEFAS TIE
X------------X-------X-------X-------X-------X-------X-------X-------X----X------------X--X-------X-------X-------X------X-----X---X

 4848    1  0   0.949     0.0     0.0     0.0     0.0     0.0     0.0
 FAZ.CORT-138   -77.0     0.0     0.0     0.0     0.0     0.0     0.0
                                                 22.4%                 4847 BRASNORT-138  1   -15.6    -6.6    17.9
                                                 13.1%                 4849 JUARA----138  1     9.0     4.4    10.5
                                                  9.3%                 4851 JUINA----138  1     6.7     2.3     7.4
 4849    1  0   0.918     0.0     0.0     8.8     0.0    -4.2     0.0
 JUARA----138   -78.3     0.0     0.0     3.8     0.0     0.0     0.0
                                                 16.2%                 4848 FAZ.CORT-138  1    -8.8    -8.0    13.0
 4851    1 -1   0.931     5.0     0.0    11.6     0.0    -4.3     0.0
 JUINA----138   -77.7     2.0     0.0     4.9     0.0     0.0     0.0
                                                 13.1%                 4848 FAZ.CORT-138  1    -6.6    -7.2    10.5
 4853    1  0   1.002     0.0     0.0     0.0     0.0     0.0     0.0
 Q.MARCOS 138   -75.2     0.0     0.0     0.0     0.0     0.0     0.0
                                                 26.5%                 4841 JUBA 1   138  1   -28.0     2.9    28.1
                                                 87.4%                 4855 Q.MARCOS  34  1    15.7     7.8    17.5 0.981*
                                                  0.0%                 4863 ARAPUT-1-138  1     0.0     0.0     0.0
                                                 17.9%                 4883 CACERES  138  1    12.3   -10.7    16.3
 4855    1  0   0.988     0.0     0.0    15.7     0.0     0.0     0.0
 Q.MARCOS  34   -79.4     0.0     0.0     6.4     0.0     0.0     0.0
                                                 85.8%                 4853 Q.MARCOS 138  1   -15.7    -6.4    17.2
 4863    1  0   1.002     0.0     0.0     0.0     0.0     0.0     0.0
 ARAPUT-1-138   -50.7     0.0     0.0     0.0     0.0     0.0     0.0
                                                  9.3%                 4807 JAURU    138  1    -9.2    -3.7     9.9
                                                  0.0%                 4853 Q.MARCOS 138  1     0.0     0.0     0.0
                                                  0.1%                 4865 ARAPUTAN  34  1     9.2     3.7     9.9 0.988*
 4865    1  0   0.998     0.0     0.0     9.2     0.0     0.0     0.0
 ARAPUTAN  34   -53.1     0.0     0.0     3.3     0.0     0.0     0.0
                                                  0.1%                 4863 ARAPUT-1-138  1    -9.2    -3.3     9.8
 4867    1  1   1.010    20.0     0.0     0.0     0.0     0.0     0.0
 Pch AJaur138   -46.3    -9.5     0.0     0.0     0.0     0.0     0.0
                                                 27.4%                 4812 PCH OMBR 138  1    20.0    -9.5    21.9
 4873    1  0   1.008     0.0     0.0     0.0     0.0     0.0     0.0
 PLACER-1-138   -48.5     0.0     0.0     0.0     0.0     0.0     0.0
                                                 25.7%                 4807 JAURU    138  1    14.4    -8.8    16.7
                                                 43.4%                 4876 P.LACERDA 13  1    10.7     2.3    10.9 1.007*
                                                 32.1%                 4877 Pch SCorg 13  1   -25.1     6.5    25.7
 4876    1  0   0.991     0.0     0.0    10.7     0.0     0.0     0.0
 P.LACERDA 13   -51.5     0.0     0.0     1.8     0.0     0.0     0.0
                                                 43.7%                 4873 PLACER-1-138  1   -10.7    -1.8    10.9
CEPEL - CENTRO DE PESQUISAS DE ENERGIA ELETRICA - PROGRAMA DE ANALISE DE REDES - V08MAR05A                                PAG. 412
```

```
ANUAL 06/07 * SETEMBRO 2006 PESADA S/SE 19H N/NE 19H * ANAT0 - FSE - C13
RELATORIO COMPLETO DO SISTEMA * AREA 46 * *              CEMAT             *

X----------------- D A D O S  -  B A R R A ------------------------X------------ F L U X O S  -  C I R C U I T O S ------------X
 DA BARRA      TENSAO GERACAO INJ EQV  CARGA   ELO CC  SHUNT    MOTOR
 NUM. KV TIPO   MOD/     MW/     MW/     MW/     MW/   Mvar/     MW/
     NOME       ANG     Mvar    Mvar    Mvar    Mvar   EQUIV    Mvar  PARA BARRA                    FLUXOS
                                                FLUXO % SHUNT L         NUM.     NOME     NC     MW    Mvar  MVA/V_d   TAP  DEFAS TIE
X------------X-------X-------X-------X-------X-------X-------X-------X----X------------X--X-------X-------X-------X------X-----X---X

 4877    1  1   1.010    26.0     0.0     0.0     0.0     0.0     0.0
 Pch SCorg 13   -43.0   -12.3     0.0     0.0     0.0     0.0     0.0
                                                35.6%                   4873 PLACER-1-138  1    26.0   -12.3    28.5
 4880    1  0   1.013     0.0     0.0    10.2     0.0    -5.1     0.0
 SAPEZAL--138   -71.9     0.0     0.0     4.3     0.0     0.0     0.0
                                                14.7%                   4845 SE MAGGI 138  1     9.8    -6.8    11.8
                                                99.6%                   4881 SAPEZAL---13  1   -20.0    -2.6    19.9 1.000F
 4881    1  1   1.030    20.0     0.0     0.0     0.0     0.0     0.0
 SAPEZAL---13   -66.5     4.5     0.0     0.0     0.0     0.0     0.0
                                                99.6%                   4880 SAPEZAL--138  1    20.0     4.5    19.9
 4883    1  0   1.008     0.0     0.0     0.0     0.0     0.0     0.0
 CACERES  138   -77.2     0.0     0.0     0.0     0.0     0.0     0.0
                                                14.8%                   4853 Q.MARCOS 138  1   -12.1     6.1    13.5
                                                86.7%                   4886 CACERES1  13  1    17.1    -3.6    17.3 1.027*
                                                 6.1%                   4893 POCONE   138  1    -5.0    -2.5     5.5
 4886    1  0   1.000     0.0     0.0    17.1     0.0     9.0     0.0
 CACERES1  13   -81.6     0.0     0.0     4.0     0.0     0.0     0.0
                                                89.1%                   4883 CACERES  138  1   -17.1     5.0    17.8
 4893    1  0   1.009     0.0     0.0     0.0     0.0     0.0     0.0
 POCONE   138   -76.0     0.0     0.0     0.0     0.0     0.0     0.0
                                                13.1%                   4713 V.GRANDE 138  1   -11.7     2.9    11.9
                                                 8.9%                   4883 CACERES  138  1     5.0    -6.4     8.1
                                                74.9%                   4896 POCONE    13  1     6.7     3.6     7.5 0.984*
 4896    1  0   0.995     0.0     0.0     6.7     0.0     0.0     0.0
 POCONE    13   -79.5     0.0     0.0     3.1     0.0     0.0     0.0
                                                73.7%                   4893 POCONE   138  1    -6.7    -3.1     7.4
 4909    1  0   1.000     0.0     0.0     0.0     0.0     0.0     0.0
 LUCAS     69   -87.2     0.0     0.0     0.0     0.0     0.0     0.0
                                                 0.0%                   4576 LUCAS RV  13  1     0.0     0.0     0.0               45
 4914    1  0   0.978     0.0     0.0     0.0     0.0     0.0     0.0
 SORR.CEMAT69   -92.5     0.0     0.0     0.0     0.0     0.0     0.0
                                            SUP 106.4%                   4564 SORR. ELN 69  1   -26.0   -17.3    31.9               45
                                            SUP 266.1%                   4916 SOR.CEMAT113  1    26.0    17.3    31.9 0.900I
 4916    1  0   0.965     0.0     0.0    26.0     0.0     0.0     0.0
 SOR.CEMAT113  -105.7     0.0     0.0     9.7     0.0     0.0     0.0
                                            SUP 239.5%                   4914 SORR.CEMAT69  1   -26.0    -9.7    28.7
CEPEL - CENTRO DE PESQUISAS DE ENERGIA ELETRICA - PROGRAMA DE ANALISE DE REDES - V08MAR05A                                PAG. 413

ANUAL 06/07 * SETEMBRO 2006 PESADA S/SE 19H N/NE 19H * ANAT0 - FSE - C13
RELATORIO COMPLETO DO SISTEMA * AREA 46 * *              CEMAT             *

X----------------- D A D O S  -  B A R R A ------------------------X------------ F L U X O S  -  C I R C U I T O S ------------X
 DA BARRA      TENSAO GERACAO INJ EQV  CARGA   ELO CC  SHUNT    MOTOR
 NUM. KV TIPO   MOD/     MW/     MW/     MW/     MW/   Mvar/     MW/
     NOME       ANG     Mvar    Mvar    Mvar    Mvar   EQUIV    Mvar  PARA BARRA                    FLUXOS
                                                FLUXO % SHUNT L         NUM.     NOME     NC     MW    Mvar  MVA/V_d   TAP  DEFAS TIE
X------------X-------X-------X-------X-------X-------X-------X-------X----X------------X--X-------X-------X-------X------X-----X---X

 4924    1  0   0.956     0.0     0.0     0.0     0.0     0.0     0.0
 SINOP-----69  -104.1     0.0     0.0     0.0     0.0     0.0     0.0
```

```
                                                  0.1%                 4925 CARMEN    69  1     7.1     1.8     7.6
                                                  0.1%                 4926 SINOP-2---13  1    -7.1    -1.8     7.6
 4925    1  0   0.936     0.0     0.0     1.1     0.0     0.0     0.0
 CARMEN    69  -105.5     0.0     0.0     0.5     0.0     0.0     0.0
                                                  0.1%                 4924 SINOP-----69  1    -7.0    -2.1     7.8
                                                  0.1%                 4927 VERA      69  1     5.9     1.6     6.5
 4926    1  0   0.972     0.0     0.0     0.0     0.0     0.0     0.0
 SINOP-2---13  -100.8     0.0     0.0     0.0     0.0     0.0     0.0
                                                  0.1%                 4924 SINOP-----69  1     7.1     2.2     7.6 1.000F
                                                  0.1%                 4933 SIN.CEMAT138  1    -7.1    -2.2     7.6
 4927    1  0   0.919     0.0     0.0     3.0     0.0     0.0     0.0
 VERA      69  -106.6     0.0     0.0     1.4     0.0     0.0     0.0
                                                  0.1%                 4925 CARMEN    69  1    -5.8    -1.9     6.6
                                                  0.0%                 4929 FELIZNATAL69  1     2.8     0.6     3.1
 4929    1  0   0.901     0.0     0.0     2.7     0.0     0.0     0.0
 FELIZNATAL69  -107.5     0.0     0.0     1.2     0.0     0.0     0.0
                                                  0.0%                 4927 VERA      69  1    -2.7    -1.2     3.3
 4933    1  0   0.992     0.0     0.0     0.0     0.0     0.0     0.0
 SIN.CEMAT138   -97.4     0.0     0.0     0.0     0.0     0.0     0.0
                                                  0.7%                 4583 SINOP ELN138  1   -74.2     0.9    74.8                45
                                                  0.1%                 4926 SINOP-2---13  1     7.1     2.7     7.6 1.000F
                                             SUP 104.1%                4936 SINOP 1   13  1    20.6     1.1    20.8 0.999*
                                                  0.2%                 4943 SINOP CT 138  1    18.6     4.8    19.4
                                                  0.3%                 4959 ENG. CLAUDIA  1    27.9    -9.5    29.7
 4936    1  0   0.993     0.0     0.0    20.6     0.0     8.9     0.0
 SINOP 1   13  -103.2     0.0     0.0     7.9     0.0     0.0     0.0
                                             SUP 104.0%                4933 SIN.CEMAT138  1   -20.6     1.0    20.8
 4943    1  0   0.989     0.0     0.0     0.0     0.0     0.0     0.0
 SINOP CT 138   -97.7     0.0     0.0     0.0     0.0     0.0     0.0
                                                  0.2%                 4933 SIN.CEMAT138  1   -18.5    -5.4    19.5
                                                  0.2%                 4946 SINOP CT  13  1    18.5     5.4    19.5
 4946    1  0   0.967     0.0     0.0    18.5     0.0     3.4     0.0
 SINOP CT  13  -103.0     0.0     0.0     6.9     0.0     0.0     0.0
                                                  0.2%                 4943 SINOP CT 138  1   -18.5    -3.6    19.5
CEPEL - CENTRO DE PESQUISAS DE ENERGIA ELETRICA - PROGRAMA DE ANALISE DE REDES - V08MAR05A                          PAG. 414

ANUAL 06/07 * SETEMBRO 2006 PESADA S/SE 19H N/NE 19H * ANAT0 - FSE - C13
RELATORIO COMPLETO DO SISTEMA * AREA 46 * *              CEMAT              *

X----------------- D A D O S  -  B A R R A -------------------------X------------ F L U X O S  -  C I R C U I T O S ------------X
 DA BARRA      TENSAO GERACAO INJ EQV  CARGA   ELO CC  SHUNT    MOTOR
 NUM. KV TIPO   MOD/     MW/     MW/     MW/     MW/   Mvar/     MW/
     NOME       ANG     Mvar    Mvar    Mvar    Mvar   EQUIV    Mvar  PARA BARRA                    FLUXOS
                                                FLUXO % SHUNT L        NUM.     NOME     NC     MW    Mvar  MVA/V_d   TAP  DEFAS TIE
X------------X-------X-------X-------X-------X-------X-------X-------X----X------------X--X-------X-------X-------X------X-----X---X

 4953    1  0   0.975     0.0     0.0     0.0     0.0     0.0     0.0
 CLAUDIA  138   -99.1     0.0     0.0     0.0     0.0     0.0     0.0
                                                  0.1%                 4955 CLAUDIA   34  1    11.0     6.7    13.2
                                                  0.1%                 4959 ENG. CLAUDIA  1   -11.0    -6.7    13.2
 4955    1  0   0.913     0.0     0.0    11.0     0.0     0.0     0.0
 CLAUDIA   34  -106.2     0.0     0.0     4.9     0.0     0.0     0.0
                                                  0.1%                 4953 CLAUDIA  138  1   -11.0    -4.9    13.2
 4959    1  0   0.992     0.0     0.0     0.0     0.0     0.0     0.0
 ENG. CLAUDIA   -98.2     0.0     0.0     0.0     0.0     0.0     0.0
                                                  0.3%                 4933 SIN.CEMAT138  1   -27.8     8.8    29.4
                                                  0.1%                 4953 CLAUDIA  138  1    11.1     2.9    11.6
                                                  0.2%                 4963 COLIDER  138  1    16.7   -11.7    20.5
 4963    1  0   1.004     0.0     0.0     0.0     0.0     0.0     0.0
 COLIDER  138  -101.7     0.0     0.0     0.0     0.0     0.0     0.0
```

```
                                                  0.2%                 4959 ENG. CLAUDIA  1   -16.4     4.3    16.8
                                                 62.3%                 4966 Colider  13   1    11.7     4.4    12.5 1.000F
                                                  0.2%                 4973 A.FLORES 138  1    17.4    -2.6    17.5
                                                 14.0%                 4983 MATUPA   138  1   -12.7    -6.1    14.0
 4965    1  0   1.025     0.0     0.0     6.4     0.0     3.8     0.0
 COLIDER   34  -108.2     0.0     0.0     2.8     0.0     0.0     0.0
                                                 93.2%                 4966 Colider  13   1    -6.6    -1.1     6.5
                                                 12.3%                 4967 TerraNo  34   1     0.2     2.0     2.0
 4966    1  0   0.985     0.0     0.0     5.1     0.0     0.0     0.0
 Colider  13   -104.9     0.0     0.0     2.2     0.0     0.0     0.0
                                                 62.3%                 4963 COLIDER  138  1   -11.7    -3.7    12.5
                                                 98.1%                 4965 COLIDER   34  1     6.6     1.5     6.9 0.950F
 4967    1  0   0.967     0.0     0.0     0.0     0.0     0.6     0.0
 TerraNo  34   -106.2     0.0     0.0     0.0     0.0     0.0     0.0
                                                 14.0%                 4965 COLIDER   34  1    -0.1    -2.2     2.2
                                                 17.6%                 4985 MATUPA    34  1     0.1     2.7     2.8
 4973    1  0   0.982     0.0     0.0     0.0     0.0     0.0     0.0
 A.FLORES 138  -105.1     0.0     0.0     0.0     0.0     0.0     0.0
                                                  0.2%                 4963 COLIDER  138  1   -17.1    -5.0    18.1
                                                 90.6%                 4976 A.FLORES  13  1    17.1     5.0    18.1 0.966*
 4976    1  0   0.998     0.0     0.0    17.1     0.0     3.6     0.0
 A.FLORES  13  -109.2     0.0     0.0     7.3     0.0     0.0     0.0
                                                 87.4%                 4973 A.FLORES 138  1   -17.1    -3.7    17.5
CEPEL - CENTRO DE PESQUISAS DE ENERGIA ELETRICA - PROGRAMA DE ANALISE DE REDES - V08MAR05A                          PAG. 415

ANUAL 06/07 * SETEMBRO 2006 PESADA S/SE 19H N/NE 19H * ANAT0 - FSE - C13
RELATORIO COMPLETO DO SISTEMA * AREA 46 * *              CEMAT             *

X----------------- D A D O S  -  B A R R A ------------------------X------------ F L U X O S  -  C I R C U I T O S ------------X
 DA BARRA      TENSAO GERACAO INJ EQV  CARGA   ELO CC  SHUNT    MOTOR
 NUM. KV TIPO   MOD/     MW/     MW/     MW/     MW/   Mvar/     MW/
     NOME       ANG     Mvar    Mvar    Mvar    Mvar   EQUIV    Mvar  PARA BARRA                    FLUXOS
                                                FLUXO % SHUNT L         NUM.     NOME     NC      MW    Mvar  MVA/V_d   TAP  DEFAS TIE
X------------X-------X-------X-------X-------X-------X-------X-------X----X------------X--X-------X-------X-------X------X-----X---X

 4983    1  0   1.025     0.0     0.0     0.0     0.0     0.0     0.0
 MATUPA   138  -100.1     0.0     0.0     0.0     0.0     0.0     0.0
                                                 12.6%                 4963 COLIDER  138  1    12.9     0.1    12.6
                                                 12.6%                 4990 Pch BNorte13  1   -12.9    -0.1    12.6
 4985    1  0   0.909     0.0     0.0    11.5     0.0     0.0     0.0
 MATUPA    34  -103.6     0.0     0.0     4.5     0.0     0.0     0.0
                                                 18.8%                 4967 TerraNo  34   1     0.0    -2.7     3.0
                                                 31.0%                 4987 Guaranta 34   1    -3.6    -2.7     5.0
                                                 54.2%                 4989 PC Bnor2 34   1    -7.8     0.9     8.7
 4987    1  0   0.967     0.0     0.0     0.0     0.0     0.6     0.0
 Guaranta 34   -102.5     0.0     0.0     0.0     0.0     0.0     0.0
                                                 30.7%                 4985 MATUPA    34  1     3.8     2.8     4.9
                                                 28.7%                 4988 PC BNor1 34   1    -3.8    -2.3     4.6
 4988    1  1   1.030     4.0     0.0     0.0     0.0     0.0     0.0
 PC BNor1 34   -101.0     2.4     0.0     0.0     0.0     0.0     0.0
                                                 28.3%                 4987 Guaranta 34   1     4.0     2.4     4.5
 4989    1  1   1.040     9.0     0.0     0.0     0.0     0.0     0.0
 PC Bnor2 34    -92.7     0.5     0.0     0.0     0.0     0.0     0.0
                                                 54.2%                 4985 MATUPA    34  1     9.0     0.5     8.7
 4990    1  1   1.030    13.0     0.0     0.0     0.0     0.0     0.0
 Pch BNorte13   -98.9    -4.0     0.0     0.0     0.0     0.0     0.0
                                                 13.2%                 4983 MATUPA   138  1    13.0    -4.0    13.2
```

TOTAIS DA AREA 46

| GERACAO MW/ Mvar | INJ EQV MW/ Mvar | CARGA MW/ Mvar | ELO CC MW/ Mvar | SHUNT Mvar/ EQUIV | EXPORT MW/ Mvar | IMPORT MW/ Mvar | PERDAS MW/ Mvar |
|---|---|---|---|---|---|---|---|
| 263.5 | 0.0 | 704.6 | 0.0 | 12.5 | 291.3 | 749.4 | 17.0 |
| -51.7 | 0.0 | 182.7 | 0.0 | 0.0 | 18.1 | 116.1 | -123.9 |



| DADOS - BARRA | | | | | | | | FLUXOS - CIRCUITOS | | | | | | | | |
|---|---|---|---|---|---|---|---|---|---|---|---|---|---|---|---|---|
| DA BARRA NUM. KV TIPO NOME | TENSAO MOD/ ANG | GERACAO MW/ Mvar | INJ EQV MW/ Mvar | CARGA MW/ Mvar | ELO CC MW/ Mvar | SHUNT Mvar/ EQUIV | MOTOR MW/ Mvar | PARA BARRA NUM. | NOME | NC | MW | FLUXOS Mvar | MVA/V_d | TAP | DEFAS | TIE |
| | | | | | FLUXO % | SHUNT L | | | | | | | | | | |
| 5001 500 0 | 1.074 | 0.0 | 0.0 | 0.0 | 0.0 | 0.0 | 0.0 | | | | | | | | | |
| P.AFONSO-500 | -134.9 | 0.0 | 0.0 | 0.0 | 0.0 | 0.0 | 0.0 | | | | | | | | | |
| | | | | | 48.7% | | | 5003 | PAF-BP-1-230 | 1 | 240.8 | -201.7 | 292.3 | | | |
| | | | | | 51.6% | | | 5004 | PAF-BP-2-230 | 1 | 248.2 | -221.8 | 309.8 | | | |
| | | | | | 61.1% | | | 5022 | PAFO-4G1-4GR | 1 | -1400.0 | 472.2 | 1375.2 | 1.025F | | |
| | | | | | 0.0% | | | 5023 | USQ-01G2-0MQ | 1 | 0.0 | 0.0 | 0.0 | 1.060F | | |
| | | | | | 0.0% | | | 5024 | USQ-01G3-0MQ | 1 | 0.0 | 0.0 | 0.0 | 1.060F | | |
| | | | | | 0.0% | | | 5025 | USQ-01G4-0MQ | 1 | 0.0 | 0.0 | 0.0 | 1.060F | | |
| | | | | | 0.0% | | | 5026 | USQ-01G5-0MQ | 1 | 0.0 | 0.0 | 0.0 | 1.060F | | |
| | | | | | 0.0% | | | 5027 | USQ-01G6-0MQ | 1 | 0.0 | 0.0 | 0.0 | 1.060F | | |
| | | | | | 3.2% | | | 5050 | L.GONZAG-500 | 1 | -13.6 | -92.9 | 87.4 | | | |
| | | | | | 8.0% | | | 5060 | XINGO----500 | 1 | -55.2 | 245.9 | 234.6 | | | |
| | | | | | 32.7% | | | 5100 | ANGELIM--500 | 1 | 545.6 | -55.4 | 510.5 | | | 55 |
| | | | | | 32.8% | | | 5740 | OLINDINA-500 | 1 | 434.2 | -146.3 | 426.4 | | | 54 |
| 5003 230 0 | 1.001 | 0.0 | 0.0 | 0.0 | 0.0 | 0.0 | 0.0 | | | | | | | | | |
| PAF-BP-1-230 | -136.5 | 0.0 | 0.0 | 0.0 | 0.0 | 0.0 | 0.0 | | | | | | | | | |
| | | | | | 53.6% | | | 5001 | P.AFONSO-500 | 1 | -240.8 | 213.8 | 321.6 | 0.909F | | |
| | | | | | 0.0% | | | 5011 | PAFO-2G3-000 | 1 | 0.0 | 0.0 | 0.0 | 0.980F | | |
| | | | | | 0.0% | | | 5013 | PAFO-2G5-000 | 1 | 0.0 | 0.0 | 0.0 | 0.980F | | |
| | | | | | 0.0% | | | 5014 | PAFO-2G6-000 | 1 | 0.0 | 0.0 | 0.0 | 0.980F | | |
| | | | | | 33.4% | | | 5015 | PAFO-3G1-1GR | 1 | -160.0 | 14.3 | 160.4 | 1.027F | | |
| | | | | | 0.0% | | | 5017 | UST-01G3-0MQ | 1 | 0.0 | 0.0 | 0.0 | 1.027F | | |
| | | | | | 0.0% | | | 5029 | MXT-BP-1-230 | 1 | 0.0 | -1.0 | 1.0 | | | |
| | | | | | 30.5% | | | 5101 | ANGELIM--230 | 1 | 70.3 | -38.7 | 80.2 | | | 55 |
| | | | | | 31.9% | | | 5101 | ANGELIM--230 | 2 | 73.3 | -41.0 | 83.9 | | | 55 |
| | | | | | 19.1% | | | 5401 | B.NOME---230 | 1 | 45.4 | -38.7 | 59.6 | | | 56 |
| | | | | | 22.1% | | | 5401 | B.NOME---230 | 2 | 76.6 | -72.9 | 105.7 | | | 56 |
| | | | | | 23.7% | | | 5701 | C.DANTAS-230 | 1 | 62.8 | -38.8 | 73.7 | | | 54 |
| | | | | | 24.4% | | | 5711 | ITABAIANA230 | 1 | 68.2 | -34.1 | 76.2 | | | 54 |
| | | | | | 0.0% | | | 6200 | USD--G1--138 | 1 | 0.0 | 0.0 | 0.0 | 1.025F | | |
| | | | | | 0.5% | | | 6201 | USD--G2--138 | 1 | -51.3 | 13.8 | 53.1 | 1.025F | | |
| | | | | | 0.0% | | | 6202 | P.AFONSO-138 | 1 | 0.0 | 0.0 | 0.0 | 1.025F | | |
| | | | | | 60.1% | | | 6203 | ABAIXAD.-069 | 1 | 55.4 | 23.3 | 60.1 | 0.975* | | 52 |

```
X----------------- D A D O S  -  B A R R A ------------------------X------------ F L U X O S  -  C I R C U I T O S ------------X
 DA BARRA      TENSAO GERACAO INJ EQV  CARGA   ELO CC  SHUNT    MOTOR
 NUM. KV TIPO   MOD/     MW/     MW/     MW/     MW/   Mvar/     MW/
     NOME       ANG     Mvar    Mvar    Mvar    Mvar   EQUIV    Mvar  PARA BARRA                    FLUXOS
                                                FLUXO % SHUNT L         NUM.     NOME     NC     MW    Mvar  MVA/V_d   TAP  DEFAS TIE
X------------X-------X-------X-------X-------X-------X-------X-------X----X------------X--X-------X-------X-------X------X-----X---X

 5004  230  0   1.004     0.0     0.0     0.0     0.0     0.0     0.0
 PAF-BP-2-230  -136.6     0.0     0.0     0.0     0.0     0.0     0.0
                                                56.8%                   5001 P.AFONSO-500  1  -248.2   235.3   340.8 0.909F
                                                 0.0%                   5005 USU-01G1-0MQ  1     0.0     0.0     0.0 1.000F
                                                46.5%                   5006 PAFO-1G1-2GR  1   -60.0   -17.4    62.3 1.025F
                                                 0.0%                   5007 USU-01G3-0MQ  1     0.0     0.0     0.0 1.000F
                                                 0.0%                   5016 PAFO-3G2-000  1     0.0     0.0     0.0 1.027F
                                                 0.0%                   5018 UST-01G4-0MQ  1     0.0     0.0     0.0 1.027F
                                                 2.5%                   5028 MXT-BP-2-230  1   -68.9     7.6    69.1
                                                31.6%                   5101 ANGELIM--230  1    73.3   -40.0    83.2               55
                                                25.7%                   5101 ANGELIM--230  2    96.7   -45.4   106.5               55
                                                21.7%                   5401 B.NOME---230  1    76.6   -70.5   103.7               56
                                                27.5%                   5701 C.DANTAS-230  1    62.4   -37.0    72.3               54
                                                24.1%                   5711 ITABAIANA230  1    68.1   -32.7    75.3               54
 5005    1  0   1.004     0.0     0.0     0.0     0.0     0.0     0.0
 USU-01G1-0MQ  -136.6     0.0     0.0     0.0     0.0     0.0     0.0
                                                 0.0%                   5004 PAF-BP-2-230  1     0.0     0.0     0.0
 5006    1  1   1.000    60.0     0.0     0.0     0.0     0.0     0.0
 PAFO-1G1-2GR  -132.8    21.7     0.0     0.0     0.0     0.0     0.0
                                                47.6%                   5004 PAF-BP-2-230  1    60.0    21.7    63.8
 5007    1  0   1.004     0.0     0.0     0.0     0.0     0.0     0.0
 USU-01G3-0MQ  -136.6     0.0     0.0     0.0     0.0     0.0     0.0
                                                 0.0%                   5004 PAF-BP-2-230  1     0.0     0.0     0.0
 5009    1 -1   1.022     0.0     0.0     0.0     0.0     0.0     0.0
 PAFO-2G1-000  -136.5     0.0     0.0     0.0     0.0     0.0     0.0
                                                 0.0%                   6200 USD--G1--138  1     0.0     0.0     0.0
 5010    1  1   1.000    70.0     0.0     0.0     0.0     0.0     0.0
 PAFO-2G2-1GR  -129.2    -6.6     0.0     0.0     0.0     0.0     0.0
                                                93.7%                   6201 USD--G2--138  1    70.0    -6.6    70.3
 5011    1 -1   1.022     0.0     0.0     0.0     0.0     0.0     0.0
 PAFO-2G3-000  -136.5     0.0     0.0     0.0     0.0     0.0     0.0
                                                 0.0%                   5003 PAF-BP-1-230  1     0.0     0.0     0.0
 5012    1 -1   1.022     0.0     0.0     0.0     0.0     0.0     0.0
 PAFO-2G4-000  -136.5     0.0     0.0     0.0     0.0     0.0     0.0
                                                 0.0%                   6202 P.AFONSO-138  1     0.0     0.0     0.0
 5013    1 -1   1.022     0.0     0.0     0.0     0.0     0.0     0.0
 PAFO-2G5-000  -136.5     0.0     0.0     0.0     0.0     0.0     0.0
                                                 0.0%                   5003 PAF-BP-1-230  1     0.0     0.0     0.0
CEPEL - CENTRO DE PESQUISAS DE ENERGIA ELETRICA - PROGRAMA DE ANALISE DE REDES - V08MAR05A                              PAG. 418

ANUAL 06/07 * SETEMBRO 2006 PESADA S/SE 19H N/NE 19H * ANAT0 - FSE - C13
RELATORIO COMPLETO DO SISTEMA * AREA 51 * * CHESF (UHE PAF + UAS + ULG + UX) *

X----------------- D A D O S  -  B A R R A ------------------------X------------ F L U X O S  -  C I R C U I T O S ------------X
 DA BARRA      TENSAO GERACAO INJ EQV  CARGA   ELO CC  SHUNT    MOTOR
 NUM. KV TIPO   MOD/     MW/     MW/     MW/     MW/   Mvar/     MW/
     NOME       ANG     Mvar    Mvar    Mvar    Mvar   EQUIV    Mvar  PARA BARRA                    FLUXOS
                                                FLUXO % SHUNT L         NUM.     NOME     NC     MW    Mvar  MVA/V_d   TAP  DEFAS TIE
X------------X-------X-------X-------X-------X-------X-------X-------X----X------------X--X-------X-------X-------X------X-----X---X

 5014    1 -1   1.022     0.0     0.0     0.0     0.0     0.0     0.0
 PAFO-2G6-000  -136.5     0.0     0.0     0.0     0.0     0.0     0.0
```

```
                                                  0.0%                 5003 PAF-BP-1-230  1     0.0     0.0     0.0
 5015    1  1   0.971   160.0     0.0     0.0     0.0     0.0     0.0
 PAFO-3G1-1GR  -131.1     0.8     0.0     0.0     0.0     0.0     0.0
                                                 34.3%                 5003 PAF-BP-1-230  1   160.0     0.8   164.8
 5016    1 -1   0.977     0.0     0.0     0.0     0.0     0.0     0.0
 PAFO-3G2-000  -136.6     0.0     0.0     0.0     0.0     0.0     0.0
                                                  0.0%                 5004 PAF-BP-2-230  1     0.0     0.0     0.0
 5017    1  0   0.975     0.0     0.0     0.0     0.0     0.0     0.0
 UST-01G3-0MQ  -136.5     0.0     0.0     0.0     0.0     0.0     0.0
                                                  0.0%                 5003 PAF-BP-1-230  1     0.0     0.0     0.0
 5018    1  0   0.977     0.0     0.0     0.0     0.0     0.0     0.0
 UST-01G4-0MQ  -136.6     0.0     0.0     0.0     0.0     0.0     0.0
                                                  0.0%                 5004 PAF-BP-2-230  1     0.0     0.0     0.0
 5022    1  1   1.022  1400.0     0.0     0.0     0.0     0.0     0.0
 PAFO-4G1-4GR  -129.9  -339.5     0.0     0.0     0.0     0.0     0.0
                                                 62.6%                 5001 P.AFONSO-500  1  1400.0  -339.5  1409.6
 5023    1  0   1.014     0.0     0.0     0.0     0.0     0.0     0.0
 USQ-01G2-0MQ  -134.9     0.0     0.0     0.0     0.0     0.0     0.0
                                                  0.0%                 5001 P.AFONSO-500  1     0.0     0.0     0.0
 5024    1  0   1.014     0.0     0.0     0.0     0.0     0.0     0.0
 USQ-01G3-0MQ  -134.9     0.0     0.0     0.0     0.0     0.0     0.0
                                                  0.0%                 5001 P.AFONSO-500  1     0.0     0.0     0.0
 5025    1  0   1.014     0.0     0.0     0.0     0.0     0.0     0.0
 USQ-01G4-0MQ  -134.9     0.0     0.0     0.0     0.0     0.0     0.0
                                                  0.0%                 5001 P.AFONSO-500  1     0.0     0.0     0.0
 5026    1  0   1.014     0.0     0.0     0.0     0.0     0.0     0.0
 USQ-01G5-0MQ  -134.9     0.0     0.0     0.0     0.0     0.0     0.0
                                                  0.0%                 5001 P.AFONSO-500  1     0.0     0.0     0.0
 5027    1  0   1.014     0.0     0.0     0.0     0.0     0.0     0.0
 USQ-01G6-0MQ  -134.9     0.0     0.0     0.0     0.0     0.0     0.0
                                                  0.0%                 5001 P.AFONSO-500  1     0.0     0.0     0.0
CEPEL - CENTRO DE PESQUISAS DE ENERGIA ELETRICA - PROGRAMA DE ANALISE DE REDES - V08MAR05A                                PAG. 419

ANUAL 06/07 * SETEMBRO 2006 PESADA S/SE 19H N/NE 19H * ANAT0 - FSE - C13
RELATORIO COMPLETO DO SISTEMA * AREA 51 * * CHESF (UHE PAF + UAS + ULG + UX) *

X----------------- D A D O S  -  B A R R A ------------------------X------------ F L U X O S  -  C I R C U I T O S ------------X
 DA BARRA      TENSAO GERACAO INJ EQV  CARGA   ELO CC  SHUNT    MOTOR
 NUM. KV TIPO   MOD/     MW/     MW/     MW/     MW/   Mvar/     MW/
     NOME       ANG     Mvar    Mvar    Mvar    Mvar   EQUIV    Mvar  PARA BARRA                    FLUXOS
                                                FLUXO % SHUNT L         NUM.     NOME     NC     MW    Mvar  MVA/V_d   TAP  DEFAS TIE
X------------X-------X-------X-------X-------X-------X-------X-------X----X------------X--X-------X-------X-------X------X-----X---X

 5028  230  0   1.004     0.0     0.0     0.0     0.0     0.0     0.0
 MXT-BP-2-230  -136.3     0.0     0.0     0.0     0.0     0.0     0.0
                                                  2.5%                 5004 PAF-BP-2-230  1    69.0    -8.3    69.2
                                                 57.7%                 5032 ASALESG2-1GR  1   -69.0     8.3    69.2 1.027F
                                                  0.0%                 5033 UAS-01G4-0MQ  1     0.0     0.0     0.0 1.027F
 5029  230  0   1.001     0.0     0.0     0.0     0.0     0.0     0.0
 MXT-BP-1-230  -136.5     0.0     0.0     0.0     0.0     0.0     0.0
                                                  0.0%                 5003 PAF-BP-1-230  1     0.0     0.0     0.0
                                                  0.0%                 5030 ASALESG1-000  1     0.0     0.0     0.0 1.027F
                                                  0.0%                 5031 UAS-01G2-0MQ  1     0.0     0.0     0.0 1.027F
 5030    1 -1   0.975     0.0     0.0     0.0     0.0     0.0     0.0
 ASALESG1-000  -136.5     0.0     0.0     0.0     0.0     0.0     0.0
                                                  0.0%                 5029 MXT-BP-1-230  1     0.0     0.0     0.0
 5031    1  0   0.975     0.0     0.0     0.0     0.0     0.0     0.0
 UAS-01G2-0MQ  -136.5     0.0     0.0     0.0     0.0     0.0     0.0
                                                  0.0%                 5029 MXT-BP-1-230  1     0.0     0.0     0.0
 5032    1  1   0.971    69.0     0.0     0.0     0.0     0.0     0.0
```

```
 ASALESG2-1GR  -131.4    -2.4     0.0     0.0     0.0     0.0     0.0
                                                59.3%                 5028 MXT-BP-2-230  1    69.0    -2.4    71.1
 5033    1  0   0.977     0.0     0.0     0.0     0.0     0.0     0.0
 UAS-01G4-0MQ  -136.3     0.0     0.0     0.0     0.0     0.0     0.0
                                                 0.0%                 5028 MXT-BP-2-230  1     0.0     0.0     0.0
 5050  500  0   1.077     0.0     0.0     0.0     0.0     0.0     0.0
 L.GONZAG-500  -134.8     0.0     0.0     0.0     0.0     0.0     0.0                                -580.3 SHL
                                                 1.4%                 5001 P.AFONSO-500  1    13.7    39.3    38.6
                                                35.2%                 5051 LGONZAG1-2GR  1  -400.0   117.7   387.0 1.025F
                                                 0.0%                 5052 ULG-01G2-0MQ  1     0.0     0.0     0.0 1.030F
                                                 0.0%                 5053 ULG-01G3-0MQ  1     0.0     0.0     0.0 1.030F
                                                70.4%                 5054 LGONZAG2-2GR  1  -400.0   117.7   387.0 1.025F
                                                 0.0%                 5055 ULG-01G5-0MQ  1     0.0     0.0     0.0 1.030F
                                                 0.0%                 5056 ULG-01G6-0MQ  1     0.0     0.0     0.0 1.030F
                                                24.8%                 5100 ANGELIM--500  1   495.6   -91.7   467.9              55
                                                27.8%  -232.1         5408 MILAGRES-500  1   389.4     4.4   361.5              56
                                                29.8%                 5740 OLINDINA-500  1   378.0  -176.6   387.2              54
                                                 8.5%  -174.1         6300 SOBRAD.--500  1  -249.2     8.2   231.5
                                                 7.8%  -174.1         6300 SOBRAD.--500  2  -227.5   -19.1   211.9
 5051    1  1   1.031   400.0     0.0     0.0     0.0     0.0     0.0
 LGONZAG1-2GR  -130.5   -85.4     0.0     0.0     0.0     0.0     0.0
                                                36.1%                 5050 L.GONZAG-500  1   400.0   -85.4   396.7
CEPEL - CENTRO DE PESQUISAS DE ENERGIA ELETRICA - PROGRAMA DE ANALISE DE REDES - V08MAR05A                                PAG. 420

ANUAL 06/07 * SETEMBRO 2006 PESADA S/SE 19H N/NE 19H * ANAT0 - FSE - C13
RELATORIO COMPLETO DO SISTEMA * AREA 51 * * CHESF (UHE PAF + UAS + ULG + UX) *

X----------------- D A D O S  -  B A R R A -------------------------X------------ F L U X O S  -  C I R C U I T O S ------------X
 DA BARRA      TENSAO GERACAO INJ EQV  CARGA   ELO CC  SHUNT    MOTOR
 NUM. KV TIPO   MOD/     MW/     MW/     MW/     MW/   Mvar/     MW/
     NOME       ANG     Mvar    Mvar    Mvar    Mvar   EQUIV    Mvar  PARA BARRA                   FLUXOS
                                                FLUXO % SHUNT L         NUM.     NOME     NC     MW    Mvar  MVA/V_d   TAP  DEFAS TIE
X------------X-------X-------X-------X-------X-------X-------X-------X----X------------X--X-------X-------X-------X------X-----X---X

 5052    1  0   1.046     0.0     0.0     0.0     0.0     0.0     0.0
 ULG-01G2-0MQ  -134.8     0.0     0.0     0.0     0.0     0.0     0.0
                                                 0.0%                 5050 L.GONZAG-500  1     0.0     0.0     0.0
 5053    1  0   1.046     0.0     0.0     0.0     0.0     0.0     0.0
 ULG-01G3-0MQ  -134.8     0.0     0.0     0.0     0.0     0.0     0.0
                                                 0.0%                 5050 L.GONZAG-500  1     0.0     0.0     0.0
 5054    1  1   1.031   400.0     0.0     0.0     0.0     0.0     0.0
 LGONZAG2-2GR  -130.5   -85.4     0.0     0.0     0.0     0.0     0.0
                                                72.1%                 5050 L.GONZAG-500  1   400.0   -85.4   396.7
 5055    1  0   1.046     0.0     0.0     0.0     0.0     0.0     0.0
 ULG-01G5-0MQ  -134.8     0.0     0.0     0.0     0.0     0.0     0.0
                                                 0.0%                 5050 L.GONZAG-500  1     0.0     0.0     0.0
 5056    1  0   1.046     0.0     0.0     0.0     0.0     0.0     0.0
 ULG-01G6-0MQ  -134.8     0.0     0.0     0.0     0.0     0.0     0.0
                                                 0.0%                 5050 L.GONZAG-500  1     0.0     0.0     0.0
 5060  500  0   1.057     0.0     0.0     0.0     0.0     0.0     0.0
 XINGO----500  -134.6     0.0     0.0     0.0     0.0     0.0     0.0
                                                10.4%                 5001 P.AFONSO-500  1    55.5  -317.5   305.0
                                                87.3%                 5061 XINGO----4GR  1 -1950.0   624.6  1937.9 1.025F
                                                 0.0%                 5062 UXG-01G2-0MQ  1     0.0     0.0     0.0 1.050F
                                                 0.0%                 5063 UXG-01G3-0MQ  1     0.0     0.0     0.0 1.050F
                                                 0.0%                 5064 UXG-01G4-0MQ  1     0.0     0.0     0.0 1.050F
                                                 0.0%                 5065 UXG-01G5-0MQ  1     0.0     0.0     0.0 1.050F
                                                 0.0%                 5066 UXG-01G6-0MQ  1     0.0     0.0     0.0 1.050F
                                                58.3%                 5100 ANGELIM--500  1   607.2  -101.3   582.6              55
                                                25.1%                 5300 MESSIAS--500  1   723.6   -17.4   685.0              55
```

```
                                                  20.6%                 5720 JARDIM---500  1   563.8  -188.4   562.6                54
 5061    1  1   1.000  1950.0     0.0     0.0     0.0     0.0     0.0
 XINGO----4GR  -127.8  -378.0     0.0     0.0     0.0     0.0     0.0
                                                  89.5%                 5060 XINGO----500  1  1950.0  -378.0  1986.3
 5062    1  0   1.006     0.0     0.0     0.0     0.0     0.0     0.0
 UXG-01G2-0MQ  -134.6     0.0     0.0     0.0     0.0     0.0     0.0
                                                   0.0%                 5060 XINGO----500  1     0.0     0.0     0.0
 5063    1  0   1.006     0.0     0.0     0.0     0.0     0.0     0.0
 UXG-01G3-0MQ  -134.6     0.0     0.0     0.0     0.0     0.0     0.0
                                                   0.0%                 5060 XINGO----500  1     0.0     0.0     0.0
 5064    1  0   1.006     0.0     0.0     0.0     0.0     0.0     0.0
 UXG-01G4-0MQ  -134.6     0.0     0.0     0.0     0.0     0.0     0.0
                                                   0.0%                 5060 XINGO----500  1     0.0     0.0     0.0
CEPEL - CENTRO DE PESQUISAS DE ENERGIA ELETRICA - PROGRAMA DE ANALISE DE REDES - V08MAR05A                                PAG. 421

ANUAL 06/07 * SETEMBRO 2006 PESADA S/SE 19H N/NE 19H * ANAT0 - FSE - C13
RELATORIO COMPLETO DO SISTEMA * AREA 51 * * CHESF (UHE PAF + UAS + ULG + UX) *

X----------------- D A D O S  -  B A R R A ------------------------X------------ F L U X O S  -  C I R C U I T O S ------------X
 DA BARRA      TENSAO GERACAO INJ EQV  CARGA   ELO CC  SHUNT    MOTOR
 NUM. KV TIPO   MOD/     MW/     MW/     MW/     MW/   Mvar/     MW/
     NOME       ANG     Mvar    Mvar    Mvar    Mvar   EQUIV    Mvar  PARA BARRA                    FLUXOS
                                                FLUXO % SHUNT L         NUM.     NOME     NC     MW    Mvar  MVA/V_d   TAP  DEFAS TIE
X------------X-------X-------X-------X-------X-------X-------X-------X----X------------X--X-------X-------X-------X------X-----X---X

 5065    1  0   1.006     0.0     0.0     0.0     0.0     0.0     0.0
 UXG-01G5-0MQ  -134.6     0.0     0.0     0.0     0.0     0.0     0.0
                                                   0.0%                 5060 XINGO----500  1     0.0     0.0     0.0
 5066    1  0   1.006     0.0     0.0     0.0     0.0     0.0     0.0
 UXG-01G6-0MQ  -134.6     0.0     0.0     0.0     0.0     0.0     0.0
                                                   0.0%                 5060 XINGO----500  1     0.0     0.0     0.0
 6200  138  0   0.977     0.0     0.0     0.0     0.0     0.0     0.0
 USD--G1--138  -136.5     0.0     0.0     0.0     0.0     0.0     0.0
                                                   0.0%                 5003 PAF-BP-1-230  1     0.0     0.0     0.0
                                                   0.0%                 5009 PAFO-2G1-000  1     0.0     0.0     0.0 0.956F
 6201  138  0   0.970     0.0     0.0     0.0     0.0     0.0     0.0
 USD--G2--138  -134.9     0.0     0.0     0.0     0.0     0.0     0.0
                                                   0.5%                 5003 PAF-BP-1-230  1    51.3   -12.2    54.4
                                                  98.1%                 5010 PAFO-2G2-1GR  1   -70.0    13.6    73.5 0.956F
                                             SUP  113.5%                 6250 ZEBU-----138  1    18.7    -1.4    19.3                52
 6202  138  0   0.977     0.0     0.0     0.0     0.0     0.0     0.0
 P.AFONSO-138  -136.5     0.0     0.0     0.0     0.0     0.0     0.0
                                                   0.0%                 5003 PAF-BP-1-230  1     0.0     0.0     0.0
                                                   0.0%                 5012 PAFO-2G4-000  1     0.0     0.0     0.0 0.956F
 6300  500  0   1.070     0.0     0.0     0.0     0.0     0.0     0.0
 SOBRAD.--500  -130.3     0.0     0.0     0.0     0.0     0.0     0.0                                 -515.2 SHL
                                                   9.7%  -114.5         5050 L.GONZAG-500  1   250.7  -128.8   263.4
                                                   8.5%  -171.7         5050 L.GONZAG-500  2   228.8   -90.8   230.1
                                                  15.8%  -229.0         5572 BCSSJIUSB500  1  -218.5    17.2   204.8                57
                                                  23.7%                 6294 SOBRADIN-4GR  1  -450.0   234.0   474.0 1.025F         53
                                                   0.0%                 6295 SOBRADIN-000  1     0.0     0.0     0.0 1.025F         53
                                                   0.0%                 6296 USB-01G3-0MQ  1     0.0     0.0     0.0 1.025F         53
                                                   0.0%                 6297 USB-01G4-0MQ  1     0.0     0.0     0.0 1.025F         53
                                                   0.0%                 6298 USB-01G5-0MQ  1     0.0     0.0     0.0 1.025F         53
                                                   0.0%                 6299 USB-01G6-0MQ  1     0.0     0.0     0.0 1.025F         53
                                                  29.8%                 6301 SOBRAD.--230  1    94.5   -15.8    89.5                53
                                                  29.8%                 6301 SOBRAD.--230  2    94.5   -15.8    89.5                53
CEPEL - CENTRO DE PESQUISAS DE ENERGIA ELETRICA - PROGRAMA DE ANALISE DE REDES - V08MAR05A                                PAG. 422

ANUAL 06/07 * SETEMBRO 2006 PESADA S/SE 19H N/NE 19H * ANAT0 - FSE - C13
```

TOTAIS DA AREA 51

| GERACAO MW/ Mvar | INJ EQV MW/ Mvar | CARGA MW/ Mvar | ELO CC MW/ Mvar | SHUNT Mvar/ EQUIV | EXPORT MW/ Mvar | IMPORT MW/ Mvar | PERDAS MW/ Mvar |
|---|---|---|---|---|---|---|---|
| 4509.0 | 0.0 | 0.0 | 0.0 | 0.0 | 5150.2 | 668.5 | 27.3 |
| -874.7 | 0.0 | 0.0 | 0.0 | 0.0 | 257.9 | 1189.6 | 57.0 |



ANUAL 06/07 * SETEMBRO 2006 PESADA S/SE 19H N/NE 19H * ANAT0 - FSE - C13
RELATORIO COMPLETO DO SISTEMA * AREA 52 * * CHESF (AREA CENTRO) *

| DA BARRA NUM. KV TIPO NOME | TENSAO MOD/ ANG | GERACAO MW/ Mvar | INJ EQV MW/ Mvar | CARGA MW/ Mvar | ELO CC MW/ Mvar FLUXO % | SHUNT Mvar/ EQUIV SHUNT L | MOTOR MW/ Mvar | PARA BARRA NUM. | NOME | NC | FLUXOS MW | Mvar | MVA/V_d | TAP | DEFAS | TIE |
|---|---|---|---|---|---|---|---|---|---|---|---|---|---|---|---|---|
| 6203 69 0 | 1.000 | 0.0 | 0.0 | 60.0 | 0.0 | 0.0 | 0.0 | | | | | | | | | |
| ABAIXAD.-069 | -140.4 | 0.0 | 0.0 | 16.6 | 0.0 | 0.0 | 0.0 | | | | | | | | | |
| | | | | | 58.6% | | | 5003 | PAF-BP-1-230 | 1 | -55.4 | -19.0 | 58.6 | | | 51 |
| | | | | | 0.0% | | | 6233 | D.GOUVEIA069 | 1 | -0.7 | -0.2 | 0.7 | | | |
| | | | | | 0.0% | | | 6253 | ZEBU-RS--069 | 1 | -4.6 | 1.7 | 4.9 | | | |
| | | | | | 0.0% | | | 6259 | MULUNGU--069 | 1 | 0.0 | -0.1 | 0.1 | | | |
| | | | | | 0.0% | | | 6264 | DERIVAC.-069 | 1 | 0.7 | 1.0 | 1.2 | | | |
| 6233 69 0 | 1.001 | 0.0 | 0.0 | 0.0 | 0.0 | 0.0 | 0.0 | | | | | | | | | |
| D.GOUVEIA069 | -140.3 | 0.0 | 0.0 | 0.0 | 0.0 | 0.0 | 0.0 | | | | | | | | | |
| | | | | | 0.0% | | | 6203 | ABAIXAD.-069 | 1 | 0.7 | -0.2 | 0.7 | | | |
| | | | | | 0.0% | | | 6253 | ZEBU-RS--069 | 1 | -0.7 | 0.2 | 0.7 | | | |
| 6243 69 0 | 1.027 | 0.0 | 0.0 | 0.0 | 0.0 | 0.0 | 0.0 | | | | | | | | | |
| RODELAS--069 | -140.6 | 0.0 | 0.0 | 0.0 | 0.0 | 0.0 | 0.0 | | | | | | | | | |
| | | | | | 0.0% | | | 6245 | RODELAS--013 | 1 | 0.0 | 1.0 | 1.0 | 1.000F | | |
| | | | | | 0.0% | | | 6251 | MACURURE-069 | 1 | 0.0 | -1.0 | 1.0 | | | |
| 6245 1 0 | 0.999 | 0.0 | 0.0 | 0.0 | 0.0 | -1.0 | 0.0 | | | | | | | | | |
| RODELAS--013 | -140.6 | 0.0 | 0.0 | 0.0 | 0.0 | 0.0 | 0.0 | | | | | | | | | |
| | | | | | 0.0% | | | 6243 | RODELAS--069 | 1 | 0.0 | -1.0 | 1.0 | | | |
| 6250 138 0 | 0.969 | 0.0 | 0.0 | 0.0 | 0.0 | 0.0 | 0.0 | | | | | | | | | |
| ZEBU-----138 | -135.0 | 0.0 | 0.0 | 0.0 | 0.0 | 0.0 | 0.0 | | | | | | | | | |
| | | | | SUP | 113.4% | | | 6201 | USD--G2--138 | 1 | -18.6 | 1.1 | 19.3 | | | 51 |
| | | | | | 0.1% | | | 6252 | ZEBU-----069 | 1 | 9.1 | -0.5 | 9.4 | 0.950F | | |
| | | | | | 0.1% | | | 6252 | ZEBU-----069 | 2 | 9.6 | -0.6 | 9.9 | 0.950F | | |
| 6251 69 0 | 1.029 | 0.0 | 0.0 | 0.0 | 0.0 | 0.0 | 0.0 | | | | | | | | | |
| MACURURE-069 | -140.7 | 0.0 | 0.0 | 0.0 | 0.0 | 0.0 | 0.0 | | | | | | | | | |
| | | | | | 0.0% | | | 6243 | RODELAS--069 | 1 | 0.0 | -0.2 | 0.1 | | | |
| | | | | | 0.0% | | | 6253 | ZEBU-RS--069 | 1 | 0.0 | 1.2 | 1.2 | | | |
| | | | | | 0.0% | | | 6270 | B.VERMEL.069 | 1 | 0.0 | -1.0 | 1.0 | | | |
| 6252 69 0 | 1.029 | 0.0 | 0.0 | 0.0 | 0.0 | 0.0 | 0.0 | | | | | | | | | |
| ZEBU-----069 | -140.0 | 0.0 | 0.0 | 0.0 | 0.0 | 0.0 | 0.0 | | | | | | | | | |
| | | | | | 0.1% | | | 6250 | ZEBU-----138 | 1 | -9.1 | 1.3 | 8.9 | | | |
| | | | | | 0.1% | | | 6250 | ZEBU-----138 | 2 | -9.6 | 1.4 | 9.4 | | | |
| | | | | | 0.2% | | | 6253 | ZEBU-RS--069 | 1 | 18.6 | -2.8 | 18.3 | 1.029* | | |

```
ANUAL 06/07 * SETEMBRO 2006 PESADA S/SE 19H N/NE 19H * ANAT0 - FSE - C13
RELATORIO COMPLETO DO SISTEMA * AREA 52 * *       CHESF (AREA CENTRO)        *

X----------------- D A D O S  -  B A R R A -------------------------X------------ F L U X O S  -  C I R C U I T O S ------------X
 DA BARRA      TENSAO GERACAO INJ EQV  CARGA   ELO CC  SHUNT    MOTOR
 NUM. KV TIPO   MOD/     MW/     MW/     MW/     MW/   Mvar/     MW/
     NOME       ANG     Mvar    Mvar    Mvar    Mvar   EQUIV    Mvar  PARA BARRA                    FLUXOS
                                                FLUXO % SHUNT L         NUM.     NOME     NC     MW    Mvar  MVA/V_d   TAP  DEFAS TIE
X------------X-------X-------X-------X-------X-------X-------X-------X----X------------X--X-------X-------X-------X------X-----X---X

 6253   69  0   1.001     0.0     0.0     5.7     0.0     0.0     0.0
 ZEBU-RS--069  -140.2     0.0     0.0     3.5     0.0     0.0     0.0
                                                0.0%                    6203 ABAIXAD.-069  1     4.6    -1.8     4.9
                                                0.0%                    6233 D.GOUVEIA069  1     0.7    -0.6     0.9
                                                0.0%                    6251 MACURURE-069  1     0.0    -3.2     3.1
                                                0.2%                    6252 ZEBU-----069  1   -18.6     2.8    18.8
                                                0.0%                    6254 ZEBU-----013  1     0.0     0.0     0.0 1.000F
                                                0.0%                    6254 ZEBU-----013  2     0.0     0.0     0.0 1.000F
                                                0.1%                    6255 MOXOTO---069  1     5.0    -0.4     5.1
                                                0.0%                    6257 ITAPARICA069  1     0.4    -1.0     1.1
                                                0.0%                    6283 XINGO----069  1     2.2     0.6     2.3
 6254    1  0   1.001     0.0     0.0     0.0     0.0     0.0     0.0
 ZEBU-----013  -140.2     0.0     0.0     0.0     0.0     0.0     0.0
                                                0.0%                    6253 ZEBU-RS--069  1     0.0     0.0     0.0
                                                0.0%                    6253 ZEBU-RS--069  2     0.0     0.0     0.0
 6255   69  0   0.999     0.0     0.0     5.7     0.0     0.0     0.0
 MOXOTO---069  -140.4     0.0     0.0     0.8     0.0     0.0     0.0
                                                0.1%                    6253 ZEBU-RS--069  1    -5.0     0.3     5.1
                                                0.0%                    6256 MOXOTO---013  1     0.0     0.0     0.0 0.975F
                                                0.0%                    6256 MOXOTO---013  2     0.0     0.0     0.0 0.975F
                                                0.0%                    6264 DERIVAC.-069  1    -0.7    -1.1     1.3
 6256    1  0   1.025     0.0     0.0     0.0     0.0     0.0     0.0
 MOXOTO---013  -140.4     0.0     0.0     0.0     0.0     0.0     0.0
                                                0.0%                    6255 MOXOTO---069  1     0.0     0.0     0.0
                                                0.0%                    6255 MOXOTO---069  2     0.0     0.0     0.0
 6257   69  0   1.002     0.0     0.0     0.4     0.0     0.0     0.0
 ITAPARICA069  -140.4     0.0     0.0     0.1     0.0     0.0     0.0
                                                0.0%                    6253 ZEBU-RS--069  1    -0.4     0.6     0.7
                                                0.0%                    6258 ITAPARICA013  1     0.0     0.0     0.0 1.000F
                                                0.0%                    6258 ITAPARICA013  2     0.0     0.0     0.0 1.000F
                                                0.0%                    6268 N.PETROL.069  1     0.0    -0.4     0.4
                                                0.0%                    6286 ANGICO---069  1     0.0    -0.2     0.2
 6258    1  0   1.002     0.0     0.0     0.0     0.0     0.0     0.0
 ITAPARICA013  -140.4     0.0     0.0     0.0     0.0     0.0     0.0
                                                0.0%                    6257 ITAPARICA069  1     0.0     0.0     0.0
                                                0.0%                    6257 ITAPARICA069  2     0.0     0.0     0.0
 6259   69  0   1.000     0.0     0.0     0.0     0.0     0.0     0.0
 MULUNGU--069  -140.4     0.0     0.0     0.0     0.0     0.0     0.0
                                                0.0%                    6203 ABAIXAD.-069  1     0.0     0.0     0.0
                                                0.0%                    6260 MULUNGU--013  1     0.0     0.0     0.0 0.950F
                                                0.0%                    6260 MULUNGU--013  2     0.0     0.0     0.0 0.950F
CEPEL - CENTRO DE PESQUISAS DE ENERGIA ELETRICA - PROGRAMA DE ANALISE DE REDES - V08MAR05A                                PAG. 425

ANUAL 06/07 * SETEMBRO 2006 PESADA S/SE 19H N/NE 19H * ANAT0 - FSE - C13
RELATORIO COMPLETO DO SISTEMA * AREA 52 * *       CHESF (AREA CENTRO)        *

X----------------- D A D O S  -  B A R R A -------------------------X------------ F L U X O S  -  C I R C U I T O S ------------X
 DA BARRA      TENSAO GERACAO INJ EQV  CARGA   ELO CC  SHUNT    MOTOR
 NUM. KV TIPO   MOD/     MW/     MW/     MW/     MW/   Mvar/     MW/
```

```
     NOME       ANG     Mvar    Mvar    Mvar    Mvar   EQUIV    Mvar  PARA BARRA                    FLUXOS
                                               FLUXO % SHUNT L         NUM.     NOME     NC     MW    Mvar  MVA/V_d   TAP  DEFAS TIE
X------------X-------X-------X-------X-------X-------X-------X-------X----X------------X--X-------X-------X-------X------X-----X---X

 6260    1  0   1.053     0.0     0.0     0.0     0.0     0.0     0.0
 MULUNGU--013  -140.4     0.0     0.0     0.0     0.0     0.0     0.0
                                              0.0%                    6259 MULUNGU--069  1     0.0     0.0     0.0
                                              0.0%                    6259 MULUNGU--069  2     0.0     0.0     0.0
 6261   69  0   1.000     0.0     0.0     0.0     0.0     0.0     0.0
 MOD.RED.-069  -140.4     0.0     0.0     0.0     0.0     0.0     0.0
                                              0.0%                    6263 MOD.RED.-013  1     0.0     0.0     0.0 0.975F
                                              0.0%                    6264 DERIVAC.-069  1     0.0     0.0     0.0
 6263    1  0   1.026     0.0     0.0     0.0     0.0     0.0     0.0
 MOD.RED.-013  -140.4     0.0     0.0     0.0     0.0     0.0     0.0
                                              0.0%                    6261 MOD.RED.-069  1     0.0     0.0     0.0
 6264   69  0   1.000     0.0     0.0     0.0     0.0     0.0     0.0
 DERIVAC.-069  -140.4     0.0     0.0     0.0     0.0     0.0     0.0
                                              0.0%                    6203 ABAIXAD.-069  1    -0.7    -1.0     1.2
                                              0.0%                    6255 MOXOTO---069  1     0.7     1.0     1.2
                                              0.0%                    6261 MOD.RED.-069  1     0.0     0.0     0.0
 6268   69  0   1.003     0.0     0.0     0.0     0.0     0.0     0.0
 N.PETROL.069  -140.4     0.0     0.0     0.0     0.0     0.0     0.0
                                              0.0%                    6257 ITAPARICA069  1     0.0     0.0     0.0
 6270   69  0   1.033     0.0     0.0     0.0     0.0     0.0     0.0
 B.VERMEL.069  -140.8     0.0     0.0     0.0     0.0     0.0     0.0
                                              0.0%                    6251 MACURURE-069  1     0.0     0.0     0.0
                                              0.0%                    6271 B.VERMEL.013  1     0.0     0.0     0.0 1.000F
 6271    1  0   1.033     0.0     0.0     0.0     0.0     0.0     0.0
 B.VERMEL.013  -140.8     0.0     0.0     0.0     0.0     0.0     0.0
                                              0.0%                    6270 B.VERMEL.069  1     0.0     0.0     0.0
 6283   69  0   0.985     0.0     0.0     0.0     0.0     0.0     0.0
 XINGO----069  -140.8     0.0     0.0     0.0     0.0     0.0     0.0
                                              0.0%                    6253 ZEBU-RS--069  1    -2.2    -1.4     2.7
                                              0.0%                    6285 XINGO----013  1     2.2     1.4     2.7 1.000F
 6285    1  0   0.975     0.0     0.0     2.2     0.0     0.0     0.0
 XINGO----013  -141.7     0.0     0.0     1.4     0.0     0.0     0.0
                                              0.0%                    6283 XINGO----069  1    -2.2    -1.4     2.7
 6286   69  0   1.003     0.0     0.0     0.0     0.0     0.0     0.0
 ANGICO---069  -140.4     0.0     0.0     0.0     0.0     0.0     0.0
                                              0.0%                    6257 ITAPARICA069  1     0.0     0.0     0.0
                                              0.0%                    6287 ANGICO---013  1     0.0     0.0     0.0 1.000F
CEPEL - CENTRO DE PESQUISAS DE ENERGIA ELETRICA - PROGRAMA DE ANALISE DE REDES - V08MAR05A                              PAG. 426

ANUAL 06/07 * SETEMBRO 2006 PESADA S/SE 19H N/NE 19H * ANAT0 - FSE - C13
RELATORIO COMPLETO DO SISTEMA * AREA 52 * *       CHESF (AREA CENTRO)        *

X----------------- D A D O S  -  B A R R A -------------------------X------------ F L U X O S  -  C I R C U I T O S ------------X
 DA BARRA      TENSAO GERACAO INJ EQV  CARGA   ELO CC  SHUNT    MOTOR
 NUM. KV TIPO   MOD/     MW/     MW/     MW/     MW/   Mvar/     MW/
     NOME       ANG     Mvar    Mvar    Mvar    Mvar   EQUIV    Mvar  PARA BARRA                    FLUXOS
                                               FLUXO % SHUNT L         NUM.     NOME     NC     MW    Mvar  MVA/V_d   TAP  DEFAS TIE
X------------X-------X-------X-------X-------X-------X-------X-------X----X------------X--X-------X-------X-------X------X-----X---X

 6287    1  0   1.003     0.0     0.0     0.0     0.0     0.0     0.0
 ANGICO---013  -140.4     0.0     0.0     0.0     0.0     0.0     0.0
                                              0.0%                    6286 ANGICO---069  1     0.0     0.0     0.0
```

TOTAIS DA AREA 52

```
X--------X--------X--------X--------X--------X--------X--------X--------X
  GERACAO  INJ EQV   CARGA   ELO CC    SHUNT   EXPORT   IMPORT   PERDAS
    MW/      MW/      MW/      MW/     Mvar/     MW/      MW/      MW/
   Mvar     Mvar     Mvar     Mvar     EQUIV    Mvar     Mvar     Mvar
X--------X--------X--------X--------X--------X--------X--------X--------X

      0.0      0.0     74.0      0.0     -1.0      0.0     74.1      0.1
      0.0      0.0     22.4      0.0      0.0      1.4     19.0     -5.8
CEPEL - CENTRO DE PESQUISAS DE ENERGIA ELETRICA - PROGRAMA DE ANALISE DE REDES - V08MAR05A                                PAG. 427

ANUAL 06/07 * SETEMBRO 2006 PESADA S/SE 19H N/NE 19H * ANAT0 - FSE - C13
RELATORIO COMPLETO DO SISTEMA * AREA 53 * *    CHESF (SUDOESTE DA BAHIA)     *

X----------------- D A D O S  -  B A R R A ------------------------X------------ F L U X O S  -  C I R C U I T O S ------------X
 DA BARRA      TENSAO GERACAO INJ EQV  CARGA   ELO CC  SHUNT    MOTOR
 NUM. KV TIPO   MOD/     MW/     MW/     MW/     MW/   Mvar/     MW/
     NOME       ANG     Mvar    Mvar    Mvar    Mvar   EQUIV    Mvar  PARA BARRA                    FLUXOS
                                                FLUXO % SHUNT L         NUM.     NOME     NC     MW    Mvar  MVA/V_d   TAP  DEFAS TIE
X------------X-------X-------X-------X-------X-------X-------X-------X----X------------X--X-------X-------X-------X------X-----X---X

 6294    1  1   1.014   450.0     0.0     0.0     0.0     0.0     0.0
 SOBRADIN-4GR  -126.8  -200.4     0.0     0.0     0.0     0.0     0.0
                                              24.3%                 6300 SOBRAD.--500  1   450.0  -200.4   485.9                51
 6295    1 -1   1.044     0.0     0.0     0.0     0.0     0.0     0.0
 SOBRADIN-000  -130.3     0.0     0.0     0.0     0.0     0.0     0.0
                                               0.0%                 6300 SOBRAD.--500  1     0.0     0.0     0.0                51
 6296    1  0   1.044     0.0     0.0     0.0     0.0     0.0     0.0
 USB-01G3-0MQ  -130.3     0.0     0.0     0.0     0.0     0.0     0.0
                                               0.0%                 6300 SOBRAD.--500  1     0.0     0.0     0.0                51
 6297    1  0   1.044     0.0     0.0     0.0     0.0     0.0     0.0
 USB-01G4-0MQ  -130.3     0.0     0.0     0.0     0.0     0.0     0.0
                                               0.0%                 6300 SOBRAD.--500  1     0.0     0.0     0.0                51
 6298    1  0   1.044     0.0     0.0     0.0     0.0     0.0     0.0
 USB-01G5-0MQ  -130.3     0.0     0.0     0.0     0.0     0.0     0.0
                                               0.0%                 6300 SOBRAD.--500  1     0.0     0.0     0.0                51
 6299    1  0   1.044     0.0     0.0     0.0     0.0     0.0     0.0
 USB-01G6-0MQ  -130.3     0.0     0.0     0.0     0.0     0.0     0.0
                                               0.0%                 6300 SOBRAD.--500  1     0.0     0.0     0.0                51
 6301  230  0   1.015     0.0     0.0     0.0     0.0     0.0     0.0
 SOBRAD.--230  -131.9     0.0     0.0     0.0     0.0     0.0     0.0
                                              31.6%                 6300 SOBRAD.--500  1   -94.5    18.7    94.9 0.944*        51
                                              31.6%                 6300 SOBRAD.--500  2   -94.5    18.7    94.9 0.944*        51
                                              29.8%                 6311 JUAZEIRO-230  1    94.5   -18.7    94.9
                                              29.8%                 6311 JUAZEIRO-230  2    94.5   -18.7    94.9
 6311  230  0   1.014     0.0     0.0     0.0     0.0     0.0     0.0
 JUAZEIRO-230  -134.1     0.0     0.0     0.0     0.0     0.0     0.0
                                              29.4%                 6301 SOBRAD.--230  1   -93.8    14.5    93.5
                                              29.4%                 6301 SOBRAD.--230  2   -93.8    14.5    93.5
                                              52.1%                 6313 JZB-2----069  1    51.9    10.0    52.1 0.990*
                                              53.9%                 6313 JZB-2----069  2    53.7    10.3    53.9 0.990*
                                              15.4%                 6321 JAGUARARI230  1    43.7   -23.9    49.1
                                              14.2%                 6331 SBF------230  1    38.2   -25.4    45.2
 6313   69  0   1.014     0.0     0.0   105.6     0.0     0.0     0.0
 JZB-2----069  -137.8     0.0     0.0    13.3     0.0     0.0     0.0
                                              51.6%                 6311 JUAZEIRO-230  1   -51.9    -6.5    51.6
                                              53.4%                 6311 JUAZEIRO-230  2   -53.7    -6.8    53.4
CEPEL - CENTRO DE PESQUISAS DE ENERGIA ELETRICA - PROGRAMA DE ANALISE DE REDES - V08MAR05A                                PAG. 428
```

ANUAL 06/07 * SETEMBRO 2006 PESADA S/SE 19H N/NE 19H * ANAT0 - FSE - C13
RELATORIO COMPLETO DO SISTEMA * AREA 53 * * CHESF (SUDOESTE DA BAHIA) *

```
X----------------- D A D O S  -  B A R R A ------------------------X------------ F L U X O S  -  C I R C U I T O S ------------X
 DA BARRA      TENSAO GERACAO INJ EQV  CARGA   ELO CC  SHUNT    MOTOR
 NUM. KV TIPO   MOD/     MW/     MW/     MW/     MW/   Mvar/     MW/
     NOME       ANG     Mvar    Mvar    Mvar    Mvar   EQUIV    Mvar  PARA BARRA                    FLUXOS
                                                FLUXO % SHUNT L         NUM.     NOME     NC     MW    Mvar  MVA/V_d   TAP  DEFAS TIE
X------------X-------X-------X-------X-------X-------X-------X-------X----X------------X--X-------X-------X-------X------X-----X---X

 6321  230  0   1.021     0.0     0.0    11.5     0.0     0.0     0.0
 JAGUARARI230  -136.0     0.0     0.0     2.8     0.0     0.0     0.0
                                            13.8%                    6311 JUAZEIRO-230  1   -43.4    11.2    43.9
                                            10.7%                    6331 SBF------230  1    31.9   -14.1    34.1
 6331  230  0   1.022     0.0     0.0     0.0     0.0     0.0     0.0
 SBF------230  -137.2     0.0     0.0     0.0     0.0     0.0     0.0
                                            11.6%                    6311 JUAZEIRO-230  1   -37.8     0.3    37.0
                                             9.8%                    6321 JAGUARARI230  1   -31.7     1.7    31.1
                                            28.3%                    6333 S.BONFIM-069  1     9.5     1.1     9.3
                                            28.3%                    6333 S.BONFIM-069  2     9.5     1.1     9.3
                                            43.0%                    6333 S.BONFIM-069  3    42.8     9.9    43.0 1.000F
                                             5.0%                    6341 IRECE----230  1     7.8   -14.2    15.8
 6333   69  0   1.011     0.0     0.0    61.7     0.0     0.0     0.0
 S.BONFIM-069  -140.3     0.0     0.0     8.7     0.0     0.0     0.0
                                            28.5%                    6331 SBF------230  1    -9.5    -0.6     9.4 0.994F
                                            28.5%                    6331 SBF------230  2    -9.5    -0.6     9.4 0.994F
                                            43.0%                    6331 SBF------230  3   -42.8    -7.5    43.0
 6341  230  0   1.009     0.0     0.0     0.0     0.0     0.0     0.0
 IRECE----230  -138.0     0.0     0.0     0.0     0.0     0.0     0.0
                                             7.6%                    6331 SBF------230  1    -7.7   -23.2    24.2
                                            48.7%                    6342 IRECE----138  1    26.3     6.1    26.8 0.989*
                                            55.8%                    6343 IRECE----069  1    19.3    10.5    21.8 1.000F
                                            28.5%                    6343 IRECE----069  2    11.1     1.5    11.1
                                            32.8%                    6344 IRECE-T2-000  1    11.6     6.3    13.1 0.975F
                                             8.8%                    6347 IRECE----1CS  1     0.0     3.5     3.5
                                            25.2%                    6351 B.J.LAPA-230  1   -60.6    -4.8    60.2
 6342  138  0   1.014     0.0     0.0    26.3     0.0     0.0     0.0
 IRECE----138  -139.6     0.0     0.0     5.3     0.0     0.0     0.0
                                            48.1%                    6341 IRECE----230  1   -26.3    -5.3    26.5
 6343   69  0   0.978     0.0     0.0    42.0     0.0     0.0     0.0
 IRECE----069  -141.6     0.0     0.0     5.8     0.0     0.0     0.0
                                            55.8%                    6341 IRECE----230  1   -19.3    -9.0    21.8
                                            29.2%                    6341 IRECE----230  2   -11.1    -0.8    11.4 0.975F
                                            39.8%                    6344 IRECE-T2-000  1   -11.6    -5.4    13.1 0.975F
                                            43.8%                    6345 IRECE----013  1     0.0     9.4     9.6 1.000F
 6344    1  0   1.017     0.0     0.0     0.0     0.0     0.0     0.0
 IRECE-T2-000  -140.0     0.0     0.0     0.0     0.0     0.0     0.0
                                            32.0%                    6341 IRECE----230  1   -11.6    -5.8    12.8
                                            38.8%                    6343 IRECE----069  1    11.6     5.8    12.8
                                             0.0%                    6346 IRECE-T2-013  1     0.0     0.0     0.0
```



ANUAL 06/07 * SETEMBRO 2006 PESADA S/SE 19H N/NE 19H * ANAT0 - FSE - C13
RELATORIO COMPLETO DO SISTEMA * AREA 53 * * CHESF (SUDOESTE DA BAHIA) *

X----------------- D A D O S  -  B A R R A ------------------------X------------ F L U X O S  -  C I R C U I T O S ------------X
 DA BARRA      TENSAO GERACAO INJ EQV  CARGA   ELO CC  SHUNT    MOTOR
 NUM. KV TIPO   MOD/     MW/     MW/     MW/     MW/   Mvar/     MW/
     NOME       ANG     Mvar    Mvar    Mvar    Mvar   EQUIV    Mvar  PARA BARRA                    FLUXOS
                                                FLUXO % SHUNT L         NUM.     NOME     NC     MW    Mvar  MVA/V_d   TAP  DEFAS TIE

```
X------------X-------X-------X-------X-------X-------X-------X-------X----X------------X--X-------X-------X-------X------X-----X---X

 6345   14  0   0.963     0.0     0.0     0.0     0.0    -9.3     0.0
 IRECE----013  -141.6     0.0     0.0     0.0     0.0     0.0     0.0
                                              43.8%                    6343 IRECE----069  1     0.0    -9.3     9.6
 6346   14  0   1.017     0.0     0.0     0.0     0.0     0.0     0.0
 IRECE-T2-013  -140.0     0.0     0.0     0.0     0.0     0.0     0.0
                                               0.0%                    6344 IRECE-T2-000  1     0.0     0.0     0.0
 6347    1  1   1.025     0.0     0.0     0.0     0.0     0.0     0.0
 IRECE----1CS  -138.0    -3.5     0.0     0.0     0.0     0.0     0.0
                                               8.6%                    6341 IRECE----230  1     0.0    -3.5     3.4 1.025F
 6348    1  0   1.086     0.0     0.0     0.0     0.0     0.0     0.0
 BJ.LAPAII1CE  -126.6    97.3     0.0     0.0     0.0     0.0     0.0
                                              35.8%                    6349 BJLAPAII-500  1     0.0    97.3    89.6
 6349  500  0   1.036     0.0     0.0     0.0     0.0     0.0     0.0
 BJLAPAII-500  -126.6     0.0     0.0     0.0     0.0     0.0     0.0                                -321.7 SHL
                                              35.8%                    6348 BJ.LAPAII1CE  1     0.0   -92.8    89.6
                                              30.2%                    6351 B.J.LAPA-230  1    93.8     1.9    90.6
                                              30.2%                    6351 B.J.LAPA-230  2    93.8     1.9    90.6
                                              28.9%  -160.9            6359 IBICOARA-500  1   595.7    -2.4   575.3
                                              38.2%  -160.9            6444 R.EGUAS--500  1  -783.4    91.3   761.6
 6350    1  1   1.050     0.0     0.0     0.0     0.0     0.0     0.0
 BJLAPA---1CS  -127.9    16.3     0.0     0.0     0.0     0.0     0.0
                                               0.2%                    6351 B.J.LAPA-230  1     0.0    16.3    15.5 1.025F
 6351  230  0   1.000     0.0     0.0     0.0     0.0   -25.0     0.0
 B.J.LAPA-230  -127.9     0.0     0.0     0.0     0.0     0.0     0.0
                                              29.8%                    6341 IRECE----230  1    62.6   -33.8    71.2
                                              31.3%                    6349 BJLAPAII-500  1   -93.8     0.3    93.8 0.966*
                                              31.3%                    6349 BJLAPAII-500  2   -93.8     0.3    93.8 0.966*
                                               0.2%                    6350 BJLAPA---1CS  1     0.0   -15.9    15.9
                                              69.2%                    6352 BJS-04T3-000  1    25.0    10.2    27.0 1.000F
                                              45.4%                    6354 BJS-04T2-000  1    15.4     9.6    18.2 0.975F
                                              44.4%                    6358 BJS-04T1-000  1    14.2     3.7    14.6 0.980F
                                              58.7%                    6361 BARREIRAS230  1    70.4     0.6    70.4
 6352    1  0   0.968     0.0     0.0     0.0     0.0     0.0     0.0
 BJS-04T3-000  -133.2     0.0     0.0     0.0     0.0     0.0     0.0
                                              69.2%                    6351 B.J.LAPA-230  1   -25.0    -7.6    27.0
                                              69.2%                    6353 B.J.LAPA-069  1    25.0     7.6    27.0 1.000F
                                               0.0%                    6355 B.J.LAPA-013  1     0.0     0.0     0.0 1.000F
```



```
X----------------- D A D O S  -  B A R R A ------------------------X------------ F L U X O S  -  C I R C U I T O S ------------X
 DA BARRA      TENSAO GERACAO INJ EQV  CARGA   ELO CC  SHUNT    MOTOR
 NUM. KV TIPO   MOD/     MW/     MW/     MW/     MW/   Mvar/     MW/
     NOME       ANG     Mvar    Mvar    Mvar    Mvar   EQUIV    Mvar  PARA BARRA                  FLUXOS
                                              FLUXO % SHUNT L         NUM.     NOME     NC     MW    Mvar  MVA/V_d   TAP  DEFAS TIE
X------------X-------X-------X-------X-------X-------X-------X-------X----X------------X--X-------X-------X-------X------X-----X---X

 6353   69  0   0.970     5.4     0.0    60.0     0.0     0.0     0.0
 B.J.LAPA-069  -132.8     0.0     0.0     8.3     0.0     0.0     0.0
                                              69.2%                    6352 BJS-04T3-000  1   -25.0    -7.8    27.0
                                              40.1%                    6354 BJS-04T2-000  1   -15.4     1.9    16.0 0.968F
                                              44.9%                    6358 BJS-04T1-000  1   -14.2    -2.4    14.8 0.968F
 6354    1  0   0.998     0.0     0.0     0.0     0.0     0.0     0.0
 BJS-04T2-000  -130.6     0.0     0.0     0.0     0.0     0.0     0.0
                                              44.3%                    6351 B.J.LAPA-230  1   -15.4    -8.6    17.7
                                              38.8%                    6353 B.J.LAPA-069  1    15.4    -1.3    15.5
```

```
                                                  45.2%                 6356 BJS--T2--013  1     0.0     9.9    10.0 1.000F
 6355   14  0   0.968     0.0     0.0     0.0     0.0     0.0     0.0
 B.J.LAPA-013  -133.2     0.0     0.0     0.0     0.0     0.0     0.0
                                                   0.0%                 6352 BJS-04T3-000  1     0.0     0.0     0.0
 6356   14  0   0.995     0.0     0.0     0.0     0.0    -9.9     0.0
 BJS--T2--013  -130.6     0.0     0.0     0.0     0.0     0.0     0.0
                                                  45.2%                 6354 BJS-04T2-000  1     0.0    -9.9    10.0
 6358    1  0   1.021     0.0     0.0     0.0     0.0     0.0     0.0
 BJS-04T1-000  -127.9     0.0     0.0     0.0     0.0     0.0     0.0
                                                  43.5%                 6351 B.J.LAPA-230  1   -14.2    -3.7    14.4
                                                  43.5%                 6353 B.J.LAPA-069  1    14.2     3.7    14.4
 6359  500  0   1.030     0.0     0.0     0.0     0.0     0.0     0.0
 IBICOARA-500  -134.5     0.0     0.0     0.0     0.0     0.0     0.0                                -424.0 SHL
                                                  29.1%  -212.0         6349 BJLAPAII-500  1  -590.1    82.8   578.7
                                                  29.1%  -212.0         6369 SAPEACU--500  1   590.1   -82.8   578.7
 6361  230  0   0.935     0.0     0.0     0.0     0.0     0.0     0.0
 BARREIRAS230  -137.0     0.0     0.0     0.0     0.0     0.0     0.0                                  -8.8 SHL
                                                  62.8%    -8.8         6351 B.J.LAPA-230  1   -68.1   -18.0    75.3
                                                  26.6%                 6363 BARREIRAS069  1    23.8     7.1    26.6 0.902*
                                                  48.8%                 6365 BARREIRAS138  1    44.3    10.9    48.8 0.927*
 6363   69  0   1.029     7.9     0.0    31.7     0.0     0.0     0.0
 BARREIRAS069  -138.6     0.0     0.0     6.4     0.0     0.0     0.0
                                                  24.0%                 6361 BARREIRAS230  1   -23.8    -6.4    24.0
 6365  138  0   1.000     0.0     0.0    44.3     0.0     0.0     0.0
 BARREIRAS138  -139.3     0.0     0.0     9.0     0.0     0.0     0.0
                                                  45.2%                 6361 BARREIRAS230  1   -44.3    -9.0    45.2
CEPEL - CENTRO DE PESQUISAS DE ENERGIA ELETRICA - PROGRAMA DE ANALISE DE REDES - V08MAR05A                                PAG. 431

ANUAL 06/07 * SETEMBRO 2006 PESADA S/SE 19H N/NE 19H * ANAT0 - FSE - C13
RELATORIO COMPLETO DO SISTEMA * AREA 53 * *    CHESF (SUDOESTE DA BAHIA)     *

X----------------- D A D O S  -  B A R R A -------------------------X------------ F L U X O S  -  C I R C U I T O S ------------X
 DA BARRA      TENSAO GERACAO INJ EQV  CARGA   ELO CC  SHUNT    MOTOR
 NUM. KV TIPO   MOD/     MW/     MW/     MW/     MW/   Mvar/     MW/
     NOME       ANG     Mvar    Mvar    Mvar    Mvar   EQUIV    Mvar  PARA BARRA                   FLUXOS
                                                FLUXO % SHUNT L         NUM.     NOME     NC     MW    Mvar  MVA/V_d   TAP  DEFAS TIE
X------------X-------X-------X-------X-------X-------X-------X-------X----X------------X--X-------X-------X-------X------X-----X---X

 6369  500  0   1.054     0.0     0.0     0.0     0.0     0.0     0.0
 SAPEACU--500  -143.3     0.0     0.0     0.0     0.0     0.0     0.0                                -166.6 SHL
                                                  11.5%                 5750 CAMACARI-500  1   171.4   -58.9   172.0              54
                                                  28.4%  -166.6         6359 IBICOARA-500  1  -583.6   122.2   565.9
                                                  33.0%                 6368 SAPEACU--230  1   206.1   -31.6   197.9              54
                                                  33.0%                 6368 SAPEACU--230  2   206.1   -31.6   197.9              54
 6444  500  0   1.023     0.0     0.0     0.0     0.0  -104.7     0.0
 R.EGUAS--500  -111.4     0.0     0.0     0.0     0.0     0.0     0.0                                -418.8 SHL
                                                  39.3%  -209.4          235 S.MESA---500  1  -798.0   -69.3   782.8              01
                                                  39.2%  -209.4         6349 BJLAPAII-500  1   798.0   -35.4   780.6


TOTAIS DA AREA 53


X--------X--------X--------X--------X--------X--------X--------X--------X
  GERACAO  INJ EQV   CARGA   ELO CC    SHUNT   EXPORT   IMPORT   PERDAS
    MW/      MW/      MW/     MW/     Mvar/    MW/      MW/      MW/
   Mvar     Mvar     Mvar    Mvar     EQUIV   Mvar     Mvar     Mvar
X--------X--------X--------X--------X--------X--------X--------X--------X
```

```
   463.3      0.0    383.3      0.0   -148.9   1033.6    986.9     33.3
   -90.3      0.0     59.6      0.0      0.0     31.6    391.9     61.4
CEPEL - CENTRO DE PESQUISAS DE ENERGIA ELETRICA - PROGRAMA DE ANALISE DE REDES - V08MAR05A                                PAG. 432

ANUAL 06/07 * SETEMBRO 2006 PESADA S/SE 19H N/NE 19H * ANAT0 - FSE - C13
RELATORIO COMPLETO DO SISTEMA * AREA 54 * *         CHESF (AREA SUL)         *

X----------------- D A D O S  -  B A R R A ------------------------X------------ F L U X O S  -  C I R C U I T O S ------------X
 DA BARRA      TENSAO GERACAO INJ EQV  CARGA   ELO CC  SHUNT    MOTOR
 NUM. KV TIPO   MOD/     MW/     MW/     MW/     MW/   Mvar/     MW/
     NOME       ANG     Mvar    Mvar    Mvar    Mvar   EQUIV    Mvar  PARA BARRA                    FLUXOS
                                                FLUXO % SHUNT L        NUM.     NOME     NC     MW    Mvar  MVA/V_d   TAP  DEFAS TIE
X------------X-------X-------X-------X-------X-------X-------X-------X----X------------X--X-------X-------X-------X------X-----X---X

 5701  230  0   1.026     0.0     0.0     0.0     0.0     0.0     0.0
 C.DANTAS-230  -141.5     0.0     0.0     0.0     0.0     0.0     0.0
                                              20.5%                    5003 PAF-BP-1-230  1   -61.7    21.6    63.7                51
                                              23.9%                    5004 PAF-BP-2-230  1   -61.3    19.5    62.7                51
                                              80.9%                    5703 C.DANTAS-069  1    13.5     4.2    13.7
                                              80.9%                    5703 C.DANTAS-069  2    13.5     4.2    13.7
                                              19.6%                    5730 DER.OLD-1230  1    49.6   -23.6    53.5
                                              19.7%                    5731 SCH------230  1    46.5   -26.0    51.9
 5703   69  0   1.014     0.0     0.0    26.9     0.0     0.0     0.0
 C.DANTAS-069  -150.8     0.0     0.0     3.8     0.0     0.0     0.0
                                              78.8%                    5701 C.DANTAS-230  1   -13.5    -1.9    13.4 1.026*
                                              78.8%                    5701 C.DANTAS-230  2   -13.5    -1.9    13.4 1.026*
                                               0.0%                    5704 C.DANTAS-013  1     0.0     0.0     0.0 1.000F
 5704   14  0   1.014     0.0     0.0     0.0     0.0     0.0     0.0
 C.DANTAS-013  -150.8     0.0     0.0     0.0     0.0     0.0     0.0
                                               0.0%                    5703 C.DANTAS-069  1     0.0     0.0     0.0
 5711  230  0   1.017     0.0     0.0     0.0     0.0     0.0     0.0
 ITABAIANA230  -142.7     0.0     0.0     0.0     0.0     0.0     0.0
                                              21.4%                    5003 PAF-BP-1-230  1   -66.7    12.4    66.7                51
                                              21.3%                    5004 PAF-BP-2-230  1   -66.7    10.7    66.4                51
                                              57.7%                    5718 ITB--T1--000  1    57.8     9.9    57.7 0.978*
                                              57.6%                    5719 ITB--T2--000  1    57.7     9.9    57.6 0.978*
                                               5.2%                    5721 JARDIM---230  1   -13.1    -9.7    16.0
                                               5.2%                    5721 JARDIM---230  2   -13.1    -9.7    16.0
                                              37.2%                    5961 ITBNINHA-230  1    44.1   -23.4    49.1
 5713   69  0   1.029     0.0     0.0   103.0     0.0     0.0     0.0
 ITABAIANA069  -147.2     0.0     0.0     5.9     0.0     0.0     0.0
                                              64.3%                    5716 ITB-TIP.-013  1     3.1     1.2     3.2 1.000F
                                              65.6%                    5716 ITB-TIP.-013  2     3.2     1.2     3.3 1.000F
                                              64.6%                    5716 ITB-TIP.-013  3     3.1     1.2     3.2 1.000F
                                              64.6%                    5716 ITB-TIP.-013  4     3.1     1.2     3.2 1.000F
                                              56.4%                    5718 ITB--T1--000  1   -57.8    -5.3    56.4
                                              56.3%                    5719 ITB--T2--000  1   -57.7    -5.3    56.3
 5715   14  0   1.029     0.0     0.0     0.0     0.0     0.0     0.0
 ITB--T1--013  -147.4     0.0     0.0     0.0     0.0     0.0     0.0
                                               0.0%                    5718 ITB--T1--000  1     0.0     0.0     0.0
 5716   14  0   1.015     0.0     0.0    12.5     0.0     0.0     0.0
 ITB-TIP.-013  -149.5     0.0     0.0     4.1     0.0     0.0     0.0
                                              64.3%                    5713 ITABAIANA069  1    -3.1    -1.0     3.2
                                              65.6%                    5713 ITABAIANA069  2    -3.2    -1.0     3.3
                                              64.6%                    5713 ITABAIANA069  3    -3.1    -1.0     3.2
                                              64.6%                    5713 ITABAIANA069  4    -3.1    -1.0     3.2
CEPEL - CENTRO DE PESQUISAS DE ENERGIA ELETRICA - PROGRAMA DE ANALISE DE REDES - V08MAR05A                                PAG. 433

ANUAL 06/07 * SETEMBRO 2006 PESADA S/SE 19H N/NE 19H * ANAT0 - FSE - C13
RELATORIO COMPLETO DO SISTEMA * AREA 54 * *         CHESF (AREA SUL)         *
```

```
X----------------- D A D O S  -  B A R R A ------------------------X------------ F L U X O S  -  C I R C U I T O S ------------X
 DA BARRA      TENSAO GERACAO INJ EQV  CARGA   ELO CC  SHUNT    MOTOR
 NUM. KV TIPO   MOD/     MW/     MW/     MW/    MW/   Mvar/     MW/
     NOME       ANG     Mvar    Mvar    Mvar   Mvar   EQUIV    Mvar  PARA BARRA                    FLUXOS
                                                FLUXO % SHUNT L        NUM.     NOME     NC     MW    Mvar  MVA/V_d   TAP  DEFAS TIE
X------------X-------X-------X-------X-------X-------X-------X-------X----X------------X--X-------X-------X-------X------X-----X---X

 5717   14  0   1.029     0.0     0.0     0.0     0.0     0.0     0.0
 ITB--T2--013  -147.4     0.0     0.0     0.0     0.0     0.0     0.0
                                                0.0%                    5719 ITB--T2--000  1     0.0     0.0     0.0
 5718    1  0   1.029     0.0     0.0     0.0     0.0     0.0     0.0
 ITB--T1--000  -147.4     0.0     0.0     0.0     0.0     0.0     0.0
                                               56.4%                    5711 ITABAIANA230  1   -57.8    -5.1    56.4
                                               56.4%                    5713 ITABAIANA069  1    57.8     5.1    56.4 1.000F
                                                0.0%                    5715 ITB--T1--013  1     0.0     0.0     0.0 1.000F
 5719    1  0   1.029     0.0     0.0     0.0     0.0     0.0     0.0
 ITB--T2--000  -147.4     0.0     0.0     0.0     0.0     0.0     0.0
                                               56.3%                    5711 ITABAIANA230  1   -57.7    -5.0    56.3
                                               56.3%                    5713 ITABAIANA069  1    57.7     5.0    56.3 1.000F
                                                0.0%                    5717 ITB--T2--013  1     0.0     0.0     0.0 1.000F
 5720  500  0   1.068     0.0     0.0     0.0     0.0     0.0     0.0
 JARDIM---500  -140.5     0.0     0.0     0.0     0.0     0.0     0.0                                -114.2 SHL
                                               19.7%  -114.2          5060 XINGO----500  1  -559.4   130.4   537.6                51
                                               47.8%                    5721 JARDIM---230  1   306.7     0.9   287.0
                                                9.8%                    5750 CAMACARI-500  1   252.7  -131.3   266.5
 5721  230  0   1.020     0.0     0.0     0.0     0.0     0.0     0.0
 JARDIM---230  -142.4     0.0     0.0     0.0     0.0     0.0     0.0
                                                4.2%                    5711 ITABAIANA230  1    13.1     1.9    13.0
                                                4.2%                    5711 ITABAIANA230  2    13.1     1.9    13.0
                                               50.1%                    5720 JARDIM---500  1  -306.7     9.6   300.8 0.954*
                                                9.3%                    5722 FAFEN----230  1    28.8     7.2    29.2
                                               70.8%                    5723 JARDIM---069  1    71.7    -9.1    70.8 1.008*
                                               76.0%                    5723 JARDIM---069  2    76.9    -9.7    76.0 1.008*
                                               77.1%                    5723 JARDIM---069  3    78.0    -9.9    77.1 1.008*
                                                0.3%                    5724 CIMESA---230  1    25.0     8.0    25.7
 5722  230  0   1.019     0.0     0.0    28.8     0.0     0.0     0.0
 FAFEN----230  -142.6     0.0     0.0     9.3     0.0     0.0     0.0
                                                9.5%                    5721 JARDIM---230  1   -28.8    -9.3    29.8
 5723   69  0   1.029     0.0     0.0   226.6     0.0    65.6     0.0
 JARDIM---069  -147.9     0.0     0.0    14.4     0.0     0.0     0.0
                                               71.4%                    5721 JARDIM---230  1   -71.7    16.2    71.4
                                               76.6%                    5721 JARDIM---230  2   -76.9    17.4    76.6
                                               77.7%                    5721 JARDIM---230  3   -78.0    17.6    77.7
 5724  230  0   1.019     0.0     0.0    25.0     0.0     0.0     0.0
 CIMESA---230  -142.5     0.0     0.0     9.2     0.0     0.0     0.0
                                                0.3%                    5721 JARDIM---230  1   -25.0    -9.2    26.1
CEPEL - CENTRO DE PESQUISAS DE ENERGIA ELETRICA - PROGRAMA DE ANALISE DE REDES - V08MAR05A                                PAG. 434

ANUAL 06/07 * SETEMBRO 2006 PESADA S/SE 19H N/NE 19H * ANAT0 - FSE - C13
RELATORIO COMPLETO DO SISTEMA * AREA 54 * *         CHESF (AREA SUL)         *

X----------------- D A D O S  -  B A R R A ------------------------X------------ F L U X O S  -  C I R C U I T O S ------------X
 DA BARRA      TENSAO GERACAO INJ EQV  CARGA   ELO CC  SHUNT    MOTOR
 NUM. KV TIPO   MOD/     MW/     MW/     MW/    MW/   Mvar/     MW/
     NOME       ANG     Mvar    Mvar    Mvar   Mvar   EQUIV    Mvar  PARA BARRA                    FLUXOS
                                                FLUXO % SHUNT L        NUM.     NOME     NC     MW    Mvar  MVA/V_d   TAP  DEFAS TIE
X------------X-------X-------X-------X-------X-------X-------X-------X----X------------X--X-------X-------X-------X------X-----X---X

 5730  230  0   1.032     0.0     0.0     0.0     0.0     0.0     0.0
```

```
 DER.OLD-1230  -143.7     0.0     0.0     0.0     0.0     0.0     0.0
                                              18.0%                 5701 C.DANTAS-230  1   -49.2    11.6    49.0
                                              17.8%                 5735 OLD------013  1     6.2     4.0     7.1 1.000F
                                              16.3%                 5782 CATU-----230  1    43.0   -15.6    44.4
 5731  230  0   1.032     0.0     0.0     0.0     0.0     0.0     0.0
 SCH------230  -145.9     0.0     0.0     0.0     0.0     0.0     0.0
                                              16.9%                 5701 C.DANTAS-230  1   -45.8    -1.4    44.4
                                              35.5%                 5736 SCH------013  1     4.3     0.9     4.3 1.000F
                                              15.3%                 5782 CATU-----230  1    41.5     0.5    40.2
 5735   14  0   1.011     0.0     0.0     6.2     0.0     0.0     0.0
 OLD------013  -145.5     0.0     0.0     3.7     0.0     0.0     0.0
                                              17.8%                 5730 DER.OLD-1230  1    -6.2    -3.7     7.1
 5736   14  0   1.027     0.0     0.0     4.3     0.0     0.0     0.0
 SCH------013  -147.4     0.0     0.0     0.7     0.0     0.0     0.0
                                              35.5%                 5731 SCH------230  1    -4.3    -0.7     4.3
 5740  500  0   1.069     0.0     0.0     0.0     0.0     0.0     0.0
 OLINDINA-500  -140.7     0.0     0.0     0.0     0.0     0.0     0.0                             -342.6 SHL
                                              31.2%  -171.3         5001 P.AFONSO-500  1  -430.7    48.3   405.6                51
                                              27.0%  -171.3         5050 L.GONZAG-500  1  -374.2    12.6   350.3                51
                                              29.3%                 5750 CAMACARI-500  1   405.2   -36.3   380.7
                                              28.9%                 5750 CAMACARI-500  2   399.7   -24.6   374.8
 5750  500  0   1.050     0.0     0.0     0.0     0.0  -110.3     0.0
 CAMACARI-500  -144.5     0.0     0.0     0.0     0.0     0.0     0.0                             -165.4 SHL
                                               8.9%  -165.4         5720 JARDIM---500  1  -251.4   -46.2   243.4
                                              31.6%                 5740 OLINDINA-500  1  -402.2  -154.6   410.3
                                              31.5%                 5740 OLINDINA-500  2  -397.5  -163.7   409.4
                                              48.6%                 5751 CMD-BP-1-230  1   294.7    82.4   291.4
                                              48.6%                 5751 CMD-BP-1-230  2   294.7    82.4   291.4
                                              48.9%                 5751 CMD-BP-1-230  3   296.9    83.0   293.5
                                              55.3%                 5751 CMD-BP-1-230  4   335.8    93.9   332.0
                                              12.2%                 6369 SAPEACU--500  1  -171.1   -87.4   183.0                53
CEPEL - CENTRO DE PESQUISAS DE ENERGIA ELETRICA - PROGRAMA DE ANALISE DE REDES - V08MAR05A                                PAG. 435

ANUAL 06/07 * SETEMBRO 2006 PESADA S/SE 19H N/NE 19H * ANAT0 - FSE - C13
RELATORIO COMPLETO DO SISTEMA * AREA 54 * *         CHESF (AREA SUL)         *

X----------------- D A D O S  -  B A R R A ------------------------X------------ F L U X O S  -  C I R C U I T O S ------------X
 DA BARRA      TENSAO GERACAO INJ EQV  CARGA   ELO CC  SHUNT    MOTOR
 NUM. KV TIPO   MOD/     MW/     MW/     MW/     MW/   Mvar/     MW/
     NOME       ANG     Mvar    Mvar    Mvar    Mvar   EQUIV    Mvar  PARA BARRA                    FLUXOS
                                              FLUXO % SHUNT L         NUM.     NOME     NC     MW    Mvar  MVA/V_d   TAP  DEFAS TIE
X------------X-------X-------X-------X-------X-------X-------X-------X----X------------X--X-------X-------X-------X------X-----X---X

 5751  230  0   1.030     0.0     0.0    68.4     0.0     0.0     0.0
 CMD-BP-1-230  -146.6     0.0     0.0    26.1     0.0     0.0     0.0
                                              49.0%                 5750 CAMACARI-500  1  -294.7   -70.6   294.2 0.991*
                                              49.0%                 5750 CAMACARI-500  2  -294.7   -70.6   294.2 0.991*
                                              49.4%                 5750 CAMACARI-500  3  -296.9   -71.1   296.3 0.991*
                                              55.9%                 5750 CAMACARI-500  4  -335.8   -80.4   335.2 0.991*
                                              49.1%                 5753 COPENE---230  1    48.9    12.7    49.1
                                              49.1%                 5753 COPENE---230  2    48.9    12.7    49.1
                                              17.6%                 5754 CQR------230  1    54.1    16.8    55.0
                                              13.7%                 5757 CAMACARI-069  1    13.5     3.9    13.7 1.025*
                                              13.8%                 5757 CAMACARI-069  2    13.7     4.0    13.8 1.025*
                                               0.0%                 5770 CAMACARI-000  1     0.0     0.0     0.0 1.000F
                                               0.0%                 5771 CAMACARI-000  1     0.0     0.0     0.0 1.025F
                                              17.3%                 5778 CAMACARI-2CS  1     0.0   -53.4    51.9 1.054F
                                               3.0%                 5782 CATU-----230  1    -8.7     4.8     9.6
                                               3.1%                 5782 CATU-----230  2    -8.7     4.9     9.7
                                              29.1%                 5802 COTEGIPE-230  1   137.5    41.1   139.3
```

```
                                                  29.6%                 5802 COTEGIPE-230  2   102.8    23.9   102.4
                                                  35.4%                 5822 JACARAC--230  1   132.3    21.3   130.1
                                                  35.4%                 5822 JACARAC--230  2   132.3    21.3   130.1
                                                  38.5%                 5842 PITUACU--230  1   181.6    53.7   183.8
                                                  38.5%                 5842 PITUACU--230  2   181.6    53.7   183.8
                                                  37.7%                 5852 MATATU---230  1   121.3    22.8   119.8
                                                   9.4%                 5871 TOMBA----230  1    28.4    10.4    29.4
                                                   8.6%                 5881 G.MANGAB.230  1   -25.8    11.9    27.5
 5753  230  0   1.029     0.0     0.0    97.8     0.0     0.0     0.0
 COPENE---230  -146.8     0.0     0.0    27.4     0.0     0.0     0.0
                                                  49.4%                 5751 CMD-BP-1-230  1   -48.9   -13.7    49.4
                                                  49.4%                 5751 CMD-BP-1-230  2   -48.9   -13.7    49.4
 5754  230  0   1.028     0.0     0.0    54.0     0.0     0.0     0.0
 CQR------230  -146.8     0.0     0.0    17.9     0.0     0.0     0.0
                                                  17.7%                 5751 CMD-BP-1-230  1   -54.0   -17.9    55.3
 5757   69  0   1.000    25.0     0.0    52.2     0.0     0.0     0.0
 CAMACARI-069  -147.6     0.0     0.0     7.4     0.0     0.0     0.0
                                                  14.0%                 5751 CMD-BP-1-230  1   -13.5    -3.7    14.0
                                                  14.2%                 5751 CMD-BP-1-230  2   -13.7    -3.7    14.2
 5770    1 -1   1.030     0.0     0.0     0.0     0.0     0.0     0.0
 CAMACARI-000  -146.6     0.0     0.0     0.0     0.0     0.0     0.0
                                                   0.0%                 5751 CMD-BP-1-230  1     0.0     0.0     0.0
 5771    1 -1   1.005     0.0     0.0     0.0     0.0     0.0     0.0
 CAMACARI-000  -146.6     0.0     0.0     0.0     0.0     0.0     0.0
                                                   0.0%                 5751 CMD-BP-1-230  1     0.0     0.0     0.0
CEPEL - CENTRO DE PESQUISAS DE ENERGIA ELETRICA - PROGRAMA DE ANALISE DE REDES - V08MAR05A                          PAG. 436

ANUAL 06/07 * SETEMBRO 2006 PESADA S/SE 19H N/NE 19H * ANAT0 - FSE - C13
RELATORIO COMPLETO DO SISTEMA * AREA 54 * *         CHESF (AREA SUL)         *

X----------------- D A D O S  -  B A R R A ------------------------X------------ F L U X O S  -  C I R C U I T O S ------------X
 DA BARRA      TENSAO GERACAO INJ EQV  CARGA   ELO CC  SHUNT    MOTOR
 NUM. KV TIPO   MOD/     MW/     MW/     MW/     MW/   Mvar/     MW/
     NOME       ANG     Mvar    Mvar    Mvar    Mvar   EQUIV    Mvar  PARA BARRA                    FLUXOS
                                                FLUXO % SHUNT L         NUM.     NOME     NC     MW    Mvar  MVA/V_d   TAP  DEFAS TIE
X------------X-------X-------X-------X-------X-------X-------X-------X----X------------X--X-------X-------X-------X------X-----X---X

 5778    1  1   1.000     0.0     0.0     0.0     0.0     0.0     0.0
 CAMACARI-2CS  -146.6    54.7     0.0     0.0     0.0     0.0     0.0
                                                  18.2%                 5751 CMD-BP-1-230  1     0.0    54.7    54.7
 5782  230  0   1.029     0.0     0.0     3.1     0.0     0.0     0.0
 CATU-----230  -146.5     0.0     0.0     1.0     0.0     0.0     0.0
                                                  15.3%                 5730 DER.OLD-1230  1   -42.7    -4.2    41.7
                                                  15.4%                 5731 SCH------230  1   -41.4    -4.9    40.5
                                                   3.9%                 5751 CMD-BP-1-230  1     8.7    -9.2    12.3
                                                   3.9%                 5751 CMD-BP-1-230  2     8.7    -9.1    12.3
                                                  66.5%                 5786 CATU-----069  1    66.4    16.7    66.5 1.011*
                                                  28.6%                 5788 CATU-T1--000  1    18.2     0.0    17.7 1.019*
                                                  39.4%                 5789 CATU-T2--000  1    24.9     3.4    24.4 1.019*
                                                  10.3%                 5881 G.MANGAB.230  1   -24.3    11.1    26.0
                                                   8.6%                 5961 ITBNINHA-230  1   -21.7    -4.6    21.5
 5786   69  0   1.000     0.0     0.0   107.7     0.0     0.0     0.0
 CATU-----069  -151.4     0.0     0.0    27.0     0.0     0.0     0.0
                                                  67.2%                 5782 CATU-----230  1   -66.4   -10.8    67.2
                                                  47.9%                 5788 CATU-T1--000  1   -18.2    -5.9    19.2
                                                  26.3%                 5789 CATU-T2--000  1   -10.4    -1.6    10.5
                                                  16.4%                 5803 COTEGIPE  69  1    -6.4    -4.3     7.7
                                                  16.4%                 5803 COTEGIPE  69  2    -6.4    -4.3     7.7
 5788    1  0   1.011     0.0     0.0     0.0     0.0     0.0     0.0
 CATU-T1--000  -149.5     0.0     0.0     0.0     0.0     0.0     0.0
```

```
                                                 29.1%                 5782 CATU-----230  1   -18.2     1.0    18.1
                                                 47.9%                 5786 CATU-----069  1    18.2     6.6    19.2 1.000F
                                                 33.7%                 5791 CTU-RL-T1013  1     0.0    -7.5     7.4 1.000F
 5789    1  0   1.003     0.0     0.0     0.0     0.0     0.0     0.0
 CATU-T2--000  -150.3     0.0     0.0     0.0     0.0     0.0     0.0
                                                 40.1%                 5782 CATU-----230  1   -24.9    -1.7    24.9
                                                 26.3%                 5786 CATU-----069  1    10.4     1.8    10.5 1.000F
                                                 65.7%                 5792 CTU-RL-T2013  1    14.5    -0.1    14.5 1.000F
 5791   14  0   1.011     0.0     0.0     0.0     0.0     0.0     0.0
 CTU-RL-T1013  -149.5     0.0     0.0     0.0     0.0     0.0     0.0
                                                 33.7%                 5788 CATU-T1--000  1     0.0     7.5     7.4
                                                  0.1%                 5793 CATU-T1--013  1     0.0    -7.5     7.4 1.000F
 5792   14  0   1.003     0.0     0.0     0.0     0.0     0.0     0.0
 CTU-RL-T2013  -150.3     0.0     0.0     0.0     0.0     0.0     0.0
                                                 65.7%                 5789 CATU-T2--000  1   -14.5     0.1    14.5
                                                  0.1%                 5794 CATU-T2--013  1    14.5    -0.1    14.5 1.000F
CEPEL - CENTRO DE PESQUISAS DE ENERGIA ELETRICA - PROGRAMA DE ANALISE DE REDES - V08MAR05A                                PAG. 437

ANUAL 06/07 * SETEMBRO 2006 PESADA S/SE 19H N/NE 19H * ANAT0 - FSE - C13
RELATORIO COMPLETO DO SISTEMA * AREA 54 * *         CHESF (AREA SUL)         *

X----------------- D A D O S  -  B A R R A -------------------------X------------ F L U X O S  -  C I R C U I T O S ------------X
 DA BARRA      TENSAO GERACAO INJ EQV  CARGA   ELO CC  SHUNT    MOTOR
 NUM. KV TIPO   MOD/     MW/     MW/     MW/     MW/   Mvar/     MW/
     NOME       ANG     Mvar    Mvar    Mvar    Mvar   EQUIV    Mvar  PARA BARRA                    FLUXOS
                                                FLUXO % SHUNT L        NUM.     NOME     NC     MW    Mvar  MVA/V_d   TAP  DEFAS TIE
X------------X-------X-------X-------X-------X-------X-------X-------X----X------------X--X-------X-------X-------X------X-----X---X

 5793   14  0   1.031     0.0     0.0     0.0     0.0     7.7     0.0
 CATU-T1--013  -149.5     0.0     0.0     0.0     0.0     0.0     0.0
                                                  0.1%                 5791 CTU-RL-T1013  1     0.0     7.7     7.4
 5794   14  0   1.004     0.0     0.0    14.5     0.0     3.6     0.0
 CATU-T2--013  -152.5     0.0     0.0     3.0     0.0     0.0     0.0
                                                  0.1%                 5792 CTU-RL-T2013  1   -14.5     0.6    14.5
 5802  230  0   1.021     0.0     0.0    19.0     0.0     0.0     0.0
 COTEGIPE-230  -147.8     0.0     0.0     2.4     0.0     0.0     0.0
                                                 29.4%                 5751 CMD-BP-1-230  1  -137.1   -43.0   140.7
                                                 29.9%                 5751 CMD-BP-1-230  2  -102.3   -25.6   103.4
                                                 33.0%                 5804 D.PITUACU230  1   153.9    46.9   157.6
                                                 35.7%                 5807 CTG--T2--000  1    29.4    21.6    35.7 0.965*
                                                 31.5%                 5808 CTG--T4--000  1    30.8     9.1    31.5 0.981*
                                                  4.9%                 5822 JACARAC--230  1     6.3   -11.4    12.8
 5803   69  0   1.029     0.0     0.0    47.3     0.0     0.0     0.0
 COTEGIPE  69  -150.0     0.0     0.0    20.2     0.0     0.0     0.0
                                                 15.4%                 5786 CATU-----069  1     6.4     3.8     7.3
                                                 15.4%                 5786 CATU-----069  2     6.4     3.8     7.3
                                                 34.5%                 5807 CTG--T2--000  1   -29.4   -19.9    34.5
                                                 30.9%                 5808 CTG--T4--000  1   -30.8    -7.8    30.9
 5804   69  0   1.010     0.0     0.0     0.0     0.0     0.0     0.0
 D.PITUACU230  -149.2     0.0     0.0     0.0     0.0     0.0     0.0
                                                 33.3%                 5802 COTEGIPE-230  1  -153.4   -47.9   159.1
                                                 10.3%                 5842 PITUACU--230  1     6.7    49.5    49.4
                                                 30.4%                 5852 MATATU---230  1   146.6    -1.6   145.2
 5806    1  0   0.930     0.0     0.0    83.7     0.0     0.0     0.0
 FIC--PTU-CTG  -161.5     0.0     0.0    24.4     0.0     0.0     0.0
                                                 99.7%                 5817 L.FREITAS069  1   -41.8   -12.2    46.9
                                                 99.7%                 5817 L.FREITAS069  2   -41.8   -12.2    46.9
 5807    1  0   1.028     0.0     0.0     0.0     0.0     0.0     0.0
 CTG--T2--000  -150.1     0.0     0.0     0.0     0.0     0.0     0.0
                                                 34.5%                 5802 COTEGIPE-230  1   -29.4   -19.9    34.5
```

```
                                                  34.5%                 5803 COTEGIPE  69  1    29.4    19.9    34.5 1.000F
                                                   0.0%                 5809 CTG-RL-T2013  1     0.0     0.0     0.0 1.000F
 5808    1  0   1.029     0.0     0.0     0.0     0.0     0.0     0.0
 CTG--T4--000  -150.1     0.0     0.0     0.0     0.0     0.0     0.0
                                                  30.9%                 5802 COTEGIPE-230  1   -30.8    -7.8    30.9
                                                  30.9%                 5803 COTEGIPE  69  1    30.8     7.8    30.9 1.000F
                                                   0.0%                 5812 COTEG.T4-013  1     0.0     0.0     0.0 1.000F
CEPEL - CENTRO DE PESQUISAS DE ENERGIA ELETRICA - PROGRAMA DE ANALISE DE REDES - V08MAR05A                                PAG. 438

ANUAL 06/07 * SETEMBRO 2006 PESADA S/SE 19H N/NE 19H * ANAT0 - FSE - C13
RELATORIO COMPLETO DO SISTEMA * AREA 54 * *         CHESF (AREA SUL)         *

X----------------- D A D O S  -  B A R R A -------------------------X------------ F L U X O S  -  C I R C U I T O S ------------X
 DA BARRA      TENSAO GERACAO INJ EQV  CARGA   ELO CC  SHUNT    MOTOR
 NUM. KV TIPO   MOD/     MW/     MW/     MW/     MW/   Mvar/     MW/
     NOME       ANG     Mvar    Mvar    Mvar    Mvar   EQUIV    Mvar  PARA BARRA                    FLUXOS
                                                FLUXO % SHUNT L         NUM.     NOME     NC     MW    Mvar  MVA/V_d   TAP  DEFAS TIE
X------------X-------X-------X-------X-------X-------X-------X-------X----X------------X--X-------X-------X-------X------X-----X---X

 5809   14  0   1.028     0.0     0.0     0.0     0.0     0.0     0.0
 CTG-RL-T2013  -150.1     0.0     0.0     0.0     0.0     0.0     0.0
                                                   0.0%                 5807 CTG--T2--000  1     0.0     0.0     0.0
                                                   0.0%                 5810 CTG-T2-130CS  1     0.0     0.0     0.0 1.000F
 5810    1  0   1.028     0.0     0.0     0.0     0.0     0.0     0.0
 CTG-T2-130CS  -150.1     0.0     0.0     0.0     0.0     0.0     0.0
                                                   0.0%                 5809 CTG-RL-T2013  1     0.0     0.0     0.0
 5812   14  0   1.029     0.0     0.0     0.0     0.0     0.0     0.0
 COTEG.T4-013  -150.1     0.0     0.0     0.0     0.0     0.0     0.0
                                                   0.0%                 5808 CTG--T4--000  1     0.0     0.0     0.0
 5817    1  0   0.960     0.0     0.0    32.5     0.0     0.0     0.0
 L.FREITAS069  -159.0     0.0     0.0     4.6     0.0     0.0     0.0
                                                  99.6%                 5806 FIC--PTU-CTG  1    42.6    14.3    46.8
                                                  99.6%                 5806 FIC--PTU-CTG  2    42.6    14.3    46.8
                                                  67.8%                 5843 PITUACU--069  1   -58.9   -16.6    63.7
                                                  67.8%                 5843 PITUACU--069  2   -58.9   -16.6    63.7
 5821  230  0   1.022     0.0     0.0     0.0     0.0     0.0     0.0
 TERMOBAH-230  -147.9     0.0     0.0     0.0     0.0     0.0     0.0
                                                   0.0%                 5822 JACARAC--230  1     0.0     0.0     0.0
                                                   0.0%                 5822 JACARAC--230  2     0.0     0.0     0.0
                                                   0.0%                 5827 T.BAH-G1-000  1     0.0     0.0     0.0 0.950F
                                                   0.0%                 5828 T.BAH-G2-000  1     0.0     0.0     0.0 0.950F
 5822  230  0   1.022     0.0     0.0    58.3     0.0     0.0     0.0
 JACARAC--230  -147.9     0.0     0.0     4.6     0.0     0.0     0.0
                                                  35.6%                 5751 CMD-BP-1-230  1  -131.7   -21.8   130.6
                                                  35.6%                 5751 CMD-BP-1-230  2  -131.7   -21.8   130.6
                                                   4.0%                 5802 COTEGIPE-230  1    -6.3     8.8    10.6
                                                   0.4%                 5821 TERMOBAH-230  1     0.0    -3.3     3.2
                                                   0.4%                 5821 TERMOBAH-230  2     0.0    -3.3     3.2
                                                  25.0%                 5824 DOW------230  1    62.3    23.2    65.0
                                                  25.0%                 5824 DOW------230  2    62.3    23.2    65.0
                                                  42.7%                 5826 JACARAC.-069  1    43.4    -4.8    42.7 1.030*
                                                  43.0%                 5826 JACARAC.-069  2    43.6    -4.8    43.0 1.030*
 5824  230  0   1.019     0.0     0.0   124.4     0.0     0.0     0.0
 DOW------230  -148.1     0.0     0.0    48.5     0.0     0.0     0.0
                                                  25.2%                 5822 JACARAC--230  1   -62.2   -24.3    65.5
                                                  25.2%                 5822 JACARAC--230  2   -62.2   -24.3    65.5
CEPEL - CENTRO DE PESQUISAS DE ENERGIA ELETRICA - PROGRAMA DE ANALISE DE REDES - V08MAR05A                                PAG. 439

ANUAL 06/07 * SETEMBRO 2006 PESADA S/SE 19H N/NE 19H * ANAT0 - FSE - C13
RELATORIO COMPLETO DO SISTEMA * AREA 54 * *         CHESF (AREA SUL)         *
```

```
X----------------- D A D O S  -  B A R R A ------------------------X------------ F L U X O S  -  C I R C U I T O S ------------X
 DA BARRA      TENSAO GERACAO INJ EQV  CARGA   ELO CC  SHUNT    MOTOR
 NUM. KV TIPO   MOD/     MW/     MW/     MW/     MW/   Mvar/     MW/
     NOME       ANG     Mvar    Mvar    Mvar    Mvar   EQUIV    Mvar  PARA BARRA                    FLUXOS
                                                FLUXO % SHUNT L         NUM.     NOME     NC     MW    Mvar  MVA/V_d   TAP  DEFAS TIE
X------------X-------X-------X-------X-------X-------X-------X-------X----X------------X--X-------X-------X-------X------X-----X---X

 5826   69  0   1.000     0.0     0.0    87.0     0.0    27.1     0.0
 JACARAC.-069  -151.1     0.0     0.0    12.4     0.0     0.0     0.0
                                            44.0%                    5822 JACARAC--230  1   -43.4     7.3    44.0
                                            44.2%                    5822 JACARAC--230  2   -43.6     7.4    44.2
                                             0.0%                    5830 JCR------013  1     0.0     0.0     0.0 1.000F
                                             0.0%                    5831 JCR------013  1     0.0     0.0     0.0 1.000F
 5827    1 -1   1.076     0.0     0.0     0.0     0.0     0.0     0.0
 T.BAH-G1-000  -147.9     0.0     0.0     0.0     0.0     0.0     0.0
                                             0.0%                    5821 TERMOBAH-230  1     0.0     0.0     0.0
 5828    1 -1   1.076     0.0     0.0     0.0     0.0     0.0     0.0
 T.BAH-G2-000  -147.9     0.0     0.0     0.0     0.0     0.0     0.0
                                             0.0%                    5821 TERMOBAH-230  1     0.0     0.0     0.0
 5830   14  0   1.000     0.0     0.0     0.0     0.0     0.0     0.0
 JCR------013  -151.1     0.0     0.0     0.0     0.0     0.0     0.0
                                             0.0%                    5826 JACARAC.-069  1     0.0     0.0     0.0
 5831   14  0   1.000     0.0     0.0     0.0     0.0     0.0     0.0
 JCR------013  -151.1     0.0     0.0     0.0     0.0     0.0     0.0
                                             0.0%                    5826 JACARAC.-069  1     0.0     0.0     0.0
 5842  230  0   1.010     0.0     0.0     0.0     0.0     0.0     0.0
 PITUACU--230  -149.2     0.0     0.0     0.0     0.0     0.0     0.0
                                            39.0%                    5751 CMD-BP-1-230  1  -180.4   -54.5   186.6
                                            39.0%                    5751 CMD-BP-1-230  2  -180.4   -54.5   186.6
                                            10.4%                    5804 D.PITUACU230  1    -6.7   -49.5    49.5
                                            99.4%                    5843 PITUACU--069  1    92.4    39.1    99.4 0.969*
                                            97.2%                    5843 PITUACU--069  2    90.4    38.3    97.2 0.969*
                                            98.5%                    5843 PITUACU--069  3    91.6    38.8    98.5 0.969*
                                       SUP 101.3%                    5848 PTU--T4--000  1    93.1    42.4   101.3 0.966*
 5843   69  0   1.000     0.0     0.0   276.8     0.0    21.2     0.0
 PITUACU--069  -155.7     0.0     0.0    80.7     0.0     0.0     0.0
                                            67.7%                    5817 L.FREITAS069  1    60.2    20.6    63.6
                                            67.7%                    5817 L.FREITAS069  2    60.2    20.6    63.6
                                            96.3%                    5842 PITUACU--230  1   -92.4   -27.2    96.3
                                            94.2%                    5842 PITUACU--230  2   -90.4   -26.6    94.2
                                            95.4%                    5842 PITUACU--230  3   -91.6   -26.9    95.4
                                             0.0%                    5846 PTU--B2--013  1     0.0     0.0     0.0 1.000F
                                             0.0%                    5847 PTU--B3--013  1     0.0     0.0     0.0
                                            97.8%                    5848 PTU--T4--000  1   -93.1   -30.1    97.8
                                            33.4%                    5856 MATATU---069  1   -14.9     5.0    15.7
                                            33.4%                    5856 MATATU---069  2   -14.9     5.0    15.7
CEPEL - CENTRO DE PESQUISAS DE ENERGIA ELETRICA - PROGRAMA DE ANALISE DE REDES - V08MAR05A                                PAG. 440

ANUAL 06/07 * SETEMBRO 2006 PESADA S/SE 19H N/NE 19H * ANAT0 - FSE - C13
RELATORIO COMPLETO DO SISTEMA * AREA 54 * *         CHESF (AREA SUL)         *

X----------------- D A D O S  -  B A R R A ------------------------X------------ F L U X O S  -  C I R C U I T O S ------------X
 DA BARRA      TENSAO GERACAO INJ EQV  CARGA   ELO CC  SHUNT    MOTOR
 NUM. KV TIPO   MOD/     MW/     MW/     MW/     MW/   Mvar/     MW/
     NOME       ANG     Mvar    Mvar    Mvar    Mvar   EQUIV    Mvar  PARA BARRA                    FLUXOS
                                                FLUXO % SHUNT L         NUM.     NOME     NC     MW    Mvar  MVA/V_d   TAP  DEFAS TIE
X------------X-------X-------X-------X-------X-------X-------X-------X----X------------X--X-------X-------X-------X------X-----X---X

 5846   14  0   1.000     0.0     0.0     0.0     0.0     0.0     0.0
```

```
 PTU--B2--013  -155.7     0.0     0.0     0.0     0.0     0.0     0.0
                                                 0.0%                 5843 PITUACU--069  1     0.0     0.0     0.0
 5847   14  0   1.000     0.0     0.0     0.0     0.0     0.0     0.0
 PTU--B3--013  -155.7     0.0     0.0     0.0     0.0     0.0     0.0
                                                 0.0%                 5843 PITUACU--069  1     0.0     0.0     0.0
 5848    1  0   0.997     0.0     0.0     0.0     0.0     0.0     0.0
 PTU--T4--000  -156.3     0.0     0.0     0.0     0.0     0.0     0.0
                                                97.8%                 5842 PITUACU--230  1   -93.1   -29.0    97.8
                                                97.8%                 5843 PITUACU--069  1    93.1    29.0    97.8 1.000F
                                                 0.0%                 5849 PTU--T4--013  1     0.0     0.0     0.0 1.000F
 5849   14  0   0.997     0.0     0.0     0.0     0.0     0.0     0.0
 PTU--T4--013  -156.3     0.0     0.0     0.0     0.0     0.0     0.0
                                                 0.0%                 5848 PTU--T4--000  1     0.0     0.0     0.0
 5852  230  0   1.009     0.0     0.0     0.0     0.0     0.0     0.0
 MATATU---230  -149.6     0.0     0.0     0.0     0.0     0.0     0.0
                                                38.2%                 5751 CMD-BP-1-230  1  -120.0   -24.1   121.3
                                                30.4%                 5804 D.PITUACU230  1  -146.5     1.1   145.2
                                                71.2%                 5856 MATATU---069  1    71.9     1.1    71.2 1.012*
                                                70.3%                 5856 MATATU---069  2    70.9     1.1    70.3 1.012*
                                                71.7%                 5856 MATATU---069  3    72.4     1.1    71.7 1.012*
                                                72.5%                 5863 MATATU-T4011  1    28.7     5.7    29.0 0.971F
                                                66.2%                 5864 MATATU-T5011  1    22.7    14.1    26.5 0.937*
 5856   69  0   1.000     0.0     0.0   185.3     0.0    27.1     0.0
 MATATU---069  -155.0     0.0     0.0    26.4     0.0     0.0     0.0
                                                33.5%                 5843 PITUACU--069  1    14.9    -4.9    15.7
                                                33.5%                 5843 PITUACU--069  2    14.9    -4.9    15.7
                                                72.1%                 5852 MATATU---230  1   -71.9     5.7    72.1
                                                71.1%                 5852 MATATU---230  2   -70.9     5.6    71.1
                                                72.6%                 5852 MATATU---230  3   -72.4     5.7    72.6
                                                 0.1%                 5865 MATATU-T3011  1     0.0    -6.4     6.4 1.004F
 5863    1  1   1.020     0.0     0.0    28.7     0.0     0.0     0.0
 MATATU-T4011  -159.3    12.3     0.0    13.1     0.0     0.0     0.0
                                                70.4%                 5852 MATATU---230  1   -28.7    -0.8    28.1
 5864    1  0   1.005     0.0     0.0    22.7     0.0     0.0     0.0
 MATATU-T5011  -157.1     0.0     0.0    10.3     0.0     0.0     0.0
                                                62.0%                 5852 MATATU---230  1   -22.7   -10.3    24.8
 5865    1  1   1.020     0.0     0.0     0.0     0.0     0.0     0.0
 MATATU-T3011  -155.0     6.6     0.0     0.0     0.0     0.0     0.0
                                                 0.1%                 5856 MATATU---069  1     0.0     6.6     6.4
```



```
X----------------- D A D O S  -  B A R R A ------------------------X------------ F L U X O S  -  C I R C U I T O S ------------X
 DA BARRA      TENSAO GERACAO INJ EQV  CARGA   ELO CC  SHUNT    MOTOR
 NUM. KV TIPO   MOD/     MW/     MW/     MW/     MW/   Mvar/     MW/
     NOME       ANG     Mvar    Mvar    Mvar    Mvar   EQUIV    Mvar  PARA BARRA                   FLUXOS
                                                FLUXO % SHUNT L         NUM.     NOME     NC     MW    Mvar  MVA/V_d   TAP  DEFAS TIE
X------------X-------X-------X-------X-------X-------X-------X-------X----X------------X--X-------X-------X-------X------X-----X---X

 5871  230  0   1.002     0.0     0.0     0.0     0.0     0.0     0.0
 TOMBA----230  -148.1     0.0     0.0     0.0     0.0     0.0     0.0
                                                13.3%                 5751 CMD-BP-1-230  1   -28.1   -30.6    41.5
                                                53.3%                 5872 EMBASA---230  1  -131.8   -20.5   133.2
                                                55.5%                 5873 TOMBA----069  1    52.9    16.9    55.5 0.955*
                                                55.5%                 5873 TOMBA----069  2    52.9    16.9    55.5 0.955*
                                                56.8%                 5873 TOMBA----069  3    54.2    17.3    56.8 0.955*
 5872  230  0   1.014     0.0     0.0     4.1     0.0     0.0     0.0
 EMBASA---230  -146.1     0.0     0.0     0.6     0.0     0.0     0.0
```

```
                                                 53.0%                 5871 TOMBA----230  1   132.8    20.2   132.4
                                                 54.6%                 5881 G.MANGAB.230  1  -136.9   -20.8   136.5
 5873   69  0   1.030     0.0     0.0   160.0     0.0     0.0     0.0
 TOMBA----069  -151.7     0.0     0.0    40.1     0.0     0.0     0.0
                                                 52.9%                 5871 TOMBA----230  1   -52.9   -13.3    52.9
                                                 52.9%                 5871 TOMBA----230  2   -52.9   -13.3    52.9
                                                 54.2%                 5871 TOMBA----230  3   -54.2   -13.6    54.2
                                                  0.0%                 5875 TOMBA----013  1     0.0     0.0     0.0 1.029*
                                                  0.0%                 5875 TOMBA----013  2     0.0     0.0     0.0 1.029*
 5875   14  0   1.001     0.0     0.0     0.0     0.0     0.0     0.0
 TOMBA----013  -151.7     0.0     0.0     0.0     0.0     0.0     0.0
                                                  0.0%                 5873 TOMBA----069  1     0.0     0.0     0.0
                                                  0.0%                 5873 TOMBA----069  2     0.0     0.0     0.0
 5881  230  0   1.019     0.0     0.0     0.0     0.0     0.0     0.0
 G.MANGAB.230  -145.4     0.0     0.0     0.0     0.0     0.0     0.0
                                                 11.4%                 5751 CMD-BP-1-230  1    25.9   -26.5    36.4
                                                 13.4%                 5782 CATU-----230  1    24.4   -24.0    33.6
                                                 54.5%                 5872 EMBASA---230  1   137.3    20.8   136.2
                                                 31.4%                 5882 P.CAVALO-230  1   -80.0     1.9    78.4
                                                 49.1%                 5883 G.MANGAB.069  1    46.5    18.3    49.1 0.984*
                                                 15.3%                 6368 SAPEACU--230  1   -49.6     2.7    48.8
                                                 16.5%                 6368 SAPEACU--230  2   -52.3     3.4    51.4
                                                 16.5%                 6368 SAPEACU--230  3   -52.3     3.4    51.4
 5882    1  0   1.020     0.0     0.0     0.0     0.0     0.0     0.0
 P.CAVALO-230  -145.2     0.0     0.0     0.0     0.0     0.0     0.0
                                                 31.4%                 5881 G.MANGAB.230  1    80.0    -2.4    78.5
                                                  0.8%                 5888 P.CAVALO-1GR  1   -80.0     2.4    78.5 1.000F
 5883   69  0   1.014     0.0     0.0    46.5     0.0     0.0     0.0
 G.MANGAB.069  -148.7     0.0     0.0    15.3     0.0     0.0     0.0
                                                 48.3%                 5881 G.MANGAB.230  1   -46.5   -15.3    48.3
                                                  0.0%                 5887 GVM-RL-T1013  1     0.0     0.0     0.0 1.000F
CEPEL - CENTRO DE PESQUISAS DE ENERGIA ELETRICA - PROGRAMA DE ANALISE DE REDES - V08MAR05A                          PAG. 442

ANUAL 06/07 * SETEMBRO 2006 PESADA S/SE 19H N/NE 19H * ANAT0 - FSE - C13
RELATORIO COMPLETO DO SISTEMA * AREA 54 * *         CHESF (AREA SUL)         *

X----------------- D A D O S  -  B A R R A ------------------------X------------ F L U X O S  -  C I R C U I T O S ------------X
 DA BARRA      TENSAO GERACAO INJ EQV  CARGA   ELO CC  SHUNT    MOTOR
 NUM. KV TIPO   MOD/     MW/     MW/     MW/     MW/   Mvar/     MW/
     NOME       ANG     Mvar    Mvar    Mvar    Mvar   EQUIV    Mvar  PARA BARRA                  FLUXOS
                                                FLUXO % SHUNT L         NUM.     NOME     NC     MW    Mvar  MVA/V_d   TAP  DEFAS TIE
X------------X-------X-------X-------X-------X-------X-------X-------X----X------------X--X-------X-------X-------X------X-----X---X

 5886   14  0   1.014     0.0     0.0     0.0     0.0     0.0     0.0
 GVM--T1--013  -148.7     0.0     0.0     0.0     0.0     0.0     0.0
                                                  0.0%                 5887 GVM-RL-T1013  1     0.0     0.0     0.0
 5887   14  0   1.014     0.0     0.0     0.0     0.0     0.0     0.0
 GVM-RL-T1013  -148.7     0.0     0.0     0.0     0.0     0.0     0.0
                                                  0.0%                 5883 G.MANGAB.069  1     0.0     0.0     0.0
                                                  0.0%                 5886 GVM--T1--013  1     0.0     0.0     0.0 1.000F
 5888    1  1   1.020    80.0     0.0     0.0     0.0     0.0     0.0
 P.CAVALO-1GR  -141.6     2.5     0.0     0.0     0.0     0.0     0.0
                                                  0.8%                 5882 P.CAVALO-230  1    80.0     2.5    78.5
 5891  230  0   1.015     0.0     0.0     0.0     0.0     0.0     0.0
 SA.JESUS-230  -146.7     0.0     0.0     0.0     0.0     0.0     0.0
                                                 72.5%                 5893 SA.JESUS-069  1    70.6    20.8    72.5 0.980*
                                                 19.4%                 5902 FUNIL----230  1    56.2   -24.8    60.6
                                                 52.3%                 6368 SAPEACU--230  1  -126.8     4.1   125.0
 5893   69  0   1.014     0.0     0.0    70.6     0.0     0.0     0.0
 SA.JESUS-069  -151.6     0.0     0.0    14.3     0.0     0.0     0.0
```

```
                                                                71.0%                  5891 SA.JESUS-230  1   -70.6   -14.3    71.0
 5902  230  0   1.018     0.0     0.0     0.0     0.0     0.0     0.0
 FUNIL----230  -151.5    26.9     0.0     0.0     0.0     0.0     0.0
                                                                17.4%                  5891 SA.JESUS-230  1   -55.3     0.3    54.3
                                                                60.1%                  5904 FUNIL----138  1    60.0    11.8    60.1 0.977*
                                                                58.8%                  5904 FUNIL----138  2    58.7    11.5    58.8 0.977*
                                                                60.1%                  5904 FUNIL----138  3    60.0    11.8    60.1 0.977*
                                                                33.3%                  5904 FUNIL----138  4    22.0     4.3    22.0 0.977*
                                                                27.5%                  5918 FUNIL-T5-000  1     8.5     3.6     9.1 0.963F
                                                                26.5%                  5941 BRUMADO--230  1    65.8   -14.5    66.3
                                                                14.7%                  5970 ITAPEBI--230  1   -46.3     2.1    45.6
                                                                14.7%                  5970 ITAPEBI--230  2   -46.3     2.1    45.6
                                                                19.4%                  6368 SAPEACU--230  1   -62.0    -3.4    61.1
                                                                20.5%                  6368 SAPEACU--230  2   -65.1    -2.7    64.0
 5904  138  0   1.031     0.0     0.0   216.4     0.0     0.0     0.0
 FUNIL----138  -155.3     0.0     0.0    30.8     0.0     0.0     0.0
                                                                58.7%                  5902 FUNIL----230  1   -60.0    -7.7    58.7
                                                                57.5%                  5902 FUNIL----230  2   -58.7    -7.6    57.5
                                                                58.7%                  5902 FUNIL----230  3   -60.0    -7.7    58.7
                                                                32.6%                  5902 FUNIL----230  4   -22.0    -2.8    21.5
                                                                13.5%                  5911 FUNIL-TR-013  1     4.8     1.5     4.9 1.000F
                                                                41.7%                  5915 FUNIL----115  1   -20.5    -6.5    20.9 1.000F
CEPEL - CENTRO DE PESQUISAS DE ENERGIA ELETRICA - PROGRAMA DE ANALISE DE REDES - V08MAR05A                                   PAG. 443

ANUAL 06/07 * SETEMBRO 2006 PESADA S/SE 19H N/NE 19H * ANAT0 - FSE - C13
RELATORIO COMPLETO DO SISTEMA * AREA 54 * *         CHESF (AREA SUL)         *

X----------------- D A D O S  -  B A R R A -------------------------X------------ F L U X O S  -  C I R C U I T O S ------------X
 DA BARRA      TENSAO GERACAO INJ EQV  CARGA   ELO CC  SHUNT    MOTOR
 NUM. KV TIPO   MOD/     MW/     MW/     MW/     MW/   Mvar/     MW/
     NOME       ANG     Mvar    Mvar    Mvar    Mvar   EQUIV    Mvar  PARA BARRA                    FLUXOS
                                                FLUXO % SHUNT L         NUM.     NOME     NC     MW    Mvar  MVA/V_d   TAP  DEFAS TIE
X------------X-------X-------X-------X-------X-------X-------X-------X----X------------X--X-------X-------X-------X------X-----X---X

 5910   14  0   1.036     0.0     0.0     0.0     0.0     0.0     0.0
 FUNIL-T5-013  -154.5     0.0     0.0     0.0     0.0     0.0     0.0
                                                                 0.0%                  5918 FUNIL-T5-000  1     0.0     0.0     0.0
 5911   14  0   1.026     0.0     0.0     4.8     0.0     0.0     0.0
 FUNIL-TR-013  -156.2     0.0     0.0     1.4     0.0     0.0     0.0
                                                                13.5%                  5904 FUNIL----138  1    -4.8    -1.4     4.9
 5915    1  0   1.036     0.0     0.0     0.0     0.0     0.0     0.0
 FUNIL----115  -154.4     0.0     0.0     0.0     0.0     0.0     0.0
                                                                41.7%                  5904 FUNIL----138  1    20.5     6.9    20.9
                                                                26.5%                  5918 FUNIL-T5-000  1    -8.5    -3.1     8.7
                                                                28.9%                  5920 UFL-01G1-1MQ  1    -4.0    -1.3     4.0 1.045F
                                                                28.9%                  5921 UFL-01G2-1MQ  1    -4.0    -1.3     4.0 1.045F
                                                                28.9%                  5922 UFL-01G3-1MQ  1    -4.0    -1.3     4.0 1.045F
 5918    1  0   1.036     0.0     0.0     0.0     0.0     0.0     0.0
 FUNIL-T5-000  -154.5     0.0     0.0     0.0     0.0     0.0     0.0
                                                                26.5%                  5902 FUNIL----230  1    -8.5    -3.1     8.7
                                                                 0.0%                  5910 FUNIL-T5-013  1     0.0     0.0     0.0 1.000F
                                                                26.5%                  5915 FUNIL----115  1     8.5     3.1     8.7 1.000F
 5920    1  1   1.000     4.0     0.0     0.0     0.0     0.0     0.0
 UFL-01G1-1MQ  -152.9     1.4     0.0     0.0     0.0     0.0     0.0
                                                                30.2%                  5915 FUNIL----115  1     4.0     1.4     4.2
 5921    1  1   1.000     4.0     0.0     0.0     0.0     0.0     0.0
 UFL-01G2-1MQ  -152.9     1.4     0.0     0.0     0.0     0.0     0.0
                                                                30.2%                  5915 FUNIL----115  1     4.0     1.4     4.2
 5922    1  1   1.000     4.0     0.0     0.0     0.0     0.0     0.0
 UFL-01G3-1MQ  -152.9     1.4     0.0     0.0     0.0     0.0     0.0
```

```
                                                  30.2%                 5915 FUNIL----115  1     4.0     1.4     4.2
 5941  230  0   0.974     0.0     0.0     0.0     0.0    -9.5     0.0
 BRUMADO--230  -160.7     0.0     0.0     0.0     0.0     0.0     0.0
                                                  27.6%                 5902 FUNIL----230  1   -63.7   -21.1    68.9
                                                  33.2%                 5944 BRUMADO--069  1    31.8     5.8    33.2 0.940*
                                                  33.2%                 5944 BRUMADO--069  2    31.8     5.8    33.2 0.940*
 5944   69  0   1.030     0.0     0.0    63.7     0.0     0.0     0.0
 BRUMADO--069  -162.9     0.0     0.0     9.1     0.0     0.0     0.0
                                                  31.2%                 5941 BRUMADO--230  1   -31.8    -4.5    31.2
                                                  31.2%                 5941 BRUMADO--230  2   -31.8    -4.5    31.2
CEPEL - CENTRO DE PESQUISAS DE ENERGIA ELETRICA - PROGRAMA DE ANALISE DE REDES - V08MAR05A                          PAG. 444

ANUAL 06/07 * SETEMBRO 2006 PESADA S/SE 19H N/NE 19H * ANAT0 - FSE - C13
RELATORIO COMPLETO DO SISTEMA * AREA 54 * *         CHESF (AREA SUL)         *

X----------------- D A D O S  -  B A R R A -------------------------X------------ F L U X O S  -  C I R C U I T O S ------------X
 DA BARRA      TENSAO GERACAO INJ EQV  CARGA   ELO CC  SHUNT    MOTOR
 NUM. KV TIPO   MOD/     MW/     MW/     MW/     MW/   Mvar/     MW/
     NOME       ANG     Mvar    Mvar    Mvar    Mvar   EQUIV    Mvar  PARA BARRA                  FLUXOS
                                                FLUXO % SHUNT L        NUM.     NOME     NC     MW    Mvar  MVA/V_d   TAP  DEFAS TIE
X------------X-------X-------X-------X-------X-------X-------X-------X----X------------X--X-------X-------X-------X------X-----X---X

 5961  230  0   1.024     0.0     0.0     0.0     0.0     0.0     0.0
 ITBNINHA-230  -144.7     0.0     0.0     0.0     0.0     0.0     0.0
                                                  33.6%                 5711 ITABAIANA230  1   -43.8    11.8    44.3
                                                  11.4%                 5782 CATU-----230  1    21.8   -19.6    28.7
                                                  22.4%                 5963 ITBNINHA-069  1     7.8     2.8     8.1 0.980*
                                                  44.7%                 5963 ITBNINHA-069  2    14.2     5.1    14.8 0.980*
 5963   69  0   1.029     0.0     0.0    22.0     0.0     0.0     0.0
 ITBNINHA-069  -147.4     0.0     0.0     6.7     0.0     0.0     0.0
                                                  21.9%                 5961 ITBNINHA-230  1    -7.8    -2.4     7.9
                                                  43.8%                 5961 ITBNINHA-230  2   -14.2    -4.3    14.5
                                                   0.0%                 5965 ITBNINHA-013  1     0.0     0.0     0.0 1.000F
 5965   14  0   1.029     0.0     0.0     0.0     0.0     0.0     0.0
 ITBNINHA-013  -147.4     0.0     0.0     0.0     0.0     0.0     0.0
                                                   0.0%                 5963 ITBNINHA-069  1     0.0     0.0     0.0
 5970  230  0   1.004     0.0     0.0     0.0     0.0     0.0     0.0
 ITAPEBI--230  -146.9     0.0     0.0     0.0     0.0     0.0     0.0
                                                  17.9%                 5902 FUNIL----230  1    47.1   -30.4    55.8
                                                  17.9%                 5902 FUNIL----230  2    47.1   -30.4    55.8
                                                  75.5%                 5971 VERACEL--230  1   126.2    51.9   135.9
                                                  22.9%                 5972 EUNAPOLIS230  1    69.8    15.3    71.2
                                                  22.9%                 5972 EUNAPOLIS230  2    69.8    15.3    71.2
                                                  74.8%                 5975 ITAPEBI--3GR  1  -360.0   -21.6   359.1 1.000F
                                                   0.0%                 5976 ITAPEBI--0MQ  1     0.0     0.0     0.0 1.000F
                                                   0.0%                 5977 ITAPEBI--0MQ  1     0.0     0.0     0.0 1.000F
 5971  230  0   1.000    96.0     0.0   111.0     0.0     0.0     0.0
 VERACEL--230  -147.3     0.0     0.0    22.5     0.0     0.0     0.0
                                                  77.1%                 5970 ITAPEBI--230  1  -126.0   -58.2   138.8
                                                   1.0%                 5973 VERACEL-34.5  1    98.0    32.6   103.3 0.968*
                                                   0.1%                 5979 EKA---11.5KV  1    13.0     3.1    13.4 0.992*
 5972  230  0   0.987     0.0     0.0     0.0     0.0     0.0     0.0
 EUNAPOLIS230  -148.9     0.0     0.0     0.0     0.0     0.0     0.0                                 -19.5 SHL
                                                  23.0%    -9.7         5970 ITAPEBI--230  1   -69.3   -12.7    71.4
                                                  23.0%    -9.7         5970 ITAPEBI--230  2   -69.3   -12.7    71.4
                                                  48.2%                 5974 EUNAPOLIS138  1    46.8     8.6    48.2 0.953*
                                                  47.0%                 5974 EUNAPOLIS138  2    45.6     8.4    47.0 0.953*
                                                  47.6%                 5974 EUNAPOLIS138  3    46.2     8.5    47.6 0.953*
 5973    1  0   1.000     0.0     0.0    98.0     0.0     0.0     0.0
 VERACEL-34.5  -154.2     0.0     0.0    19.9     0.0     0.0     0.0
```

```
                                                  1.0%                 5971 VERACEL--230  1   -98.0   -19.9   100.0
CEPEL - CENTRO DE PESQUISAS DE ENERGIA ELETRICA - PROGRAMA DE ANALISE DE REDES - V08MAR05A                                PAG. 445

ANUAL 06/07 * SETEMBRO 2006 PESADA S/SE 19H N/NE 19H * ANAT0 - FSE - C13
RELATORIO COMPLETO DO SISTEMA * AREA 54 * *         CHESF (AREA SUL)         *

X----------------- D A D O S  -  B A R R A -------------------------X------------ F L U X O S  -  C I R C U I T O S ------------X
 DA BARRA      TENSAO GERACAO INJ EQV  CARGA   ELO CC  SHUNT    MOTOR
 NUM. KV TIPO   MOD/     MW/     MW/     MW/     MW/   Mvar/     MW/
     NOME       ANG     Mvar    Mvar    Mvar    Mvar   EQUIV    Mvar  PARA BARRA                    FLUXOS
                                                FLUXO % SHUNT L         NUM.     NOME     NC     MW    Mvar  MVA/V_d   TAP  DEFAS TIE
X------------X-------X-------X-------X-------X-------X-------X-------X----X------------X--X-------X-------X-------X------X-----X---X

 5974  138  0   1.029     0.0     0.0   138.6     0.0     0.0     0.0
 EUNAPOLIS138  -151.3     0.0     0.0    19.7     0.0     0.0     0.0
                                              45.9%                 5972 EUNAPOLIS230  1   -46.8    -6.7    45.9
                                              44.8%                 5972 EUNAPOLIS230  2   -45.6    -6.5    44.8
                                              45.4%                 5972 EUNAPOLIS230  3   -46.2    -6.6    45.4
 5975    1  1   1.015   360.0     0.0     0.0     0.0     0.0     0.0
 ITAPEBI--3GR  -141.4    56.7     0.0     0.0     0.0     0.0     0.0
                                              74.8%                 5970 ITAPEBI--230  1   360.0    56.7   359.1
 5976    1  0   1.004     0.0     0.0     0.0     0.0     0.0     0.0
 ITAPEBI--0MQ  -146.9     0.0     0.0     0.0     0.0     0.0     0.0
                                               0.0%                 5970 ITAPEBI--230  1     0.0     0.0     0.0
 5977    1  0   1.004     0.0     0.0     0.0     0.0     0.0     0.0
 ITAPEBI--0MQ  -146.9     0.0     0.0     0.0     0.0     0.0     0.0
                                               0.0%                 5970 ITAPEBI--230  1     0.0     0.0     0.0
 5979    1  0   1.000     0.0     0.0    13.0     0.0     0.0     0.0
 EKA---11.5KV  -149.2     0.0     0.0     2.6     0.0     0.0     0.0
                                               0.1%                 5971 VERACEL--230  1   -13.0    -2.6    13.3
 6368  230  0   1.021     0.0     0.0     0.0     0.0     0.0     0.0
 SAPEACU--230  -144.7     0.0     0.0     0.0     0.0     0.0     0.0
                                              15.4%                 5881 G.MANGAB.230  1    49.7    -6.2    49.1
                                              16.6%                 5881 G.MANGAB.230  2    52.4    -7.0    51.8
                                              16.6%                 5881 G.MANGAB.230  3    52.4    -7.0    51.8
                                              52.4%                 5891 SA.JESUS-230  1   127.7    -5.1   125.2
                                              21.1%                 5902 FUNIL----230  1    63.4   -23.6    66.3
                                              22.3%                 5902 FUNIL----230  2    66.6   -25.1    69.7
                                              34.2%                 6369 SAPEACU--500  1  -206.1    36.9   205.2 0.964*        53
                                              34.2%                 6369 SAPEACU--500  2  -206.1    36.9   205.2 0.964*        53


TOTAIS DA AREA 54

X--------X--------X--------X--------X--------X--------X--------X--------X
  GERACAO  INJ EQV   CARGA   ELO CC    SHUNT   EXPORT   IMPORT   PERDAS
    MW/      MW/      MW/     MW/     Mvar/     MW/      MW/      MW/
   Mvar     Mvar     Mvar    Mvar     EQUIV    Mvar     Mvar     Mvar
X--------X--------X--------X--------X--------X--------X--------X--------X

    573.0      0.0   2745.4      0.0     32.5      0.0   2216.8     44.3
    163.8      0.0    591.8      0.0      0.0    718.0      0.0  -1113.6
CEPEL - CENTRO DE PESQUISAS DE ENERGIA ELETRICA - PROGRAMA DE ANALISE DE REDES - V08MAR05A                                PAG. 446

ANUAL 06/07 * SETEMBRO 2006 PESADA S/SE 19H N/NE 19H * ANAT0 - FSE - C13
RELATORIO COMPLETO DO SISTEMA * AREA 55 * *         CHESF (AREA LESTE)       *

X----------------- D A D O S  -  B A R R A -------------------------X------------ F L U X O S  -  C I R C U I T O S ------------X
```

```
 DA BARRA      TENSAO GERACAO INJ EQV  CARGA   ELO CC  SHUNT    MOTOR
 NUM. KV TIPO   MOD/     MW/     MW/     MW/     MW/   Mvar/     MW/
     NOME       ANG     Mvar    Mvar    Mvar    Mvar   EQUIV    Mvar  PARA BARRA                    FLUXOS
                                                FLUXO % SHUNT L         NUM.     NOME     NC     MW    Mvar  MVA/V_d   TAP  DEFAS TIE
X------------X-------X-------X-------X-------X-------X-------X-------X----X------------X--X-------X-------X-------X------X-----X---X

 5100  500  0   1.044     0.0     0.0     0.0     0.0  -163.6     0.0
 ANGELIM--500  -142.5     0.0     0.0     0.0     0.0     0.0     0.0                                  -490.7 SHL
                                                33.2%  -163.6         5001 P.AFONSO-500  1  -539.7   -25.7   517.4               51
                                                24.9%  -163.6         5050 L.GONZAG-500  1  -488.8   -44.3   470.0               51
                                                57.8%  -163.6         5060 XINGO----500  1  -600.5    59.6   577.8               51
                                                51.2%                 5101 ANGELIM--230  1   321.1     1.7   307.5
                                                51.2%                 5101 ANGELIM--230  2   321.1     1.7   307.5
                                                30.9%                 5140 RECIFEII-500  1   495.7   -84.7   481.5
                                                30.5%                 5140 RECIFEII-500  2   491.2   -72.0   475.4
 5101  230  0   1.030     0.0     0.0     0.0     0.0     0.0     0.0
 ANGELIM--230  -145.5     0.0     0.0     0.0     0.0     0.0     0.0
                                                25.6%                 5003 PAF-BP-1-230  1   -68.2    12.4    67.3               51
                                                26.7%                 5003 PAF-BP-1-230  2   -71.0    13.4    70.2               51
                                                26.6%                 5004 PAF-BP-2-230  1   -71.0    12.2    70.0               51
                                                22.3%                 5004 PAF-BP-2-230  2   -94.8    10.0    92.5               51
                                                52.0%                 5100 ANGELIM--500  1  -321.1    15.1   312.1 0.985*
                                                52.0%                 5100 ANGELIM--500  2  -321.1    15.1   312.1 0.985*
                                                72.3%                 5102 ANGELIM--000  1    69.6    26.6    72.3 0.972*
                                                72.7%                 5107 AGL FIC 04T3  1    69.9    26.7    72.7 0.972*
                                                36.4%                 5121 TACAIMBO-230  1   119.0   -11.0   116.1
                                                35.5%                 5121 TACAIMBO-230  2   115.8   -10.5   112.9
                                                36.1%                 5121 TACAIMBO-230  3   116.2   -11.7   113.4
                                                21.4%                 5141 RCD-BP-1-230  1    54.4   -19.9    56.2
                                                21.2%                 5142 RCD-BP-2-230  1    53.7   -20.5    55.8
                                                83.9%                 5222 C.GRANDE-230  1   170.0   -31.0   167.7
                                                30.5%                 5281 RIBEIRAO-230  1    82.2    -8.3    80.2
                                                11.7%                 5301 MESSIAS--230  1    32.6    -6.3    32.2
                                                11.7%                 5301 MESSIAS--230  2    32.6    -6.3    32.2
                                                 9.9%                 5301 MESSIAS--230  3    31.1    -6.0    30.8
 5102    1  0   1.029     0.0     0.0     0.0     0.0     0.0     0.0
 ANGELIM--000  -150.5     0.0     0.0     0.0     0.0     0.0     0.0
                                                70.3%                 5101 ANGELIM--230  1   -69.6   -19.9    70.3
                                                70.3%                 5103 ANGELIM--069  1    69.6    19.9    70.3 1.000F
                                                 0.0%                 5104 ANGELIM--013  1     0.0     0.0     0.0 1.000F
 5103   69  0   1.030     0.0     0.0   135.9     0.0     0.0     0.0
 ANGELIM--069  -150.3     0.0     0.0    38.5     0.0     0.0     0.0
                                                70.3%                 5102 ANGELIM--000  1   -69.6   -20.1    70.3
                                                40.3%                 5106 AGL-TIP.-013  1     1.8     1.0     2.0 1.000F
                                                38.0%                 5106 AGL-TIP.-013  2     1.7     0.9     1.9 1.000F
                                                 0.7%                 5107 AGL FIC 04T3  1   -69.9   -20.2    70.6
 5104   14  0   1.029     0.0     0.0     0.0     0.0     0.0     0.0
 ANGELIM--013  -150.5     0.0     0.0     0.0     0.0     0.0     0.0
                                                 0.0%                 5102 ANGELIM--000  1     0.0     0.0     0.0
CEPEL - CENTRO DE PESQUISAS DE ENERGIA ELETRICA - PROGRAMA DE ANALISE DE REDES - V08MAR05A                                PAG. 447

ANUAL 06/07 * SETEMBRO 2006 PESADA S/SE 19H N/NE 19H * ANAT0 - FSE - C13
RELATORIO COMPLETO DO SISTEMA * AREA 55 * *        CHESF (AREA LESTE)        *

X----------------- D A D O S  -  B A R R A ------------------------X------------ F L U X O S  -  C I R C U I T O S ------------X
 DA BARRA      TENSAO GERACAO INJ EQV  CARGA   ELO CC  SHUNT    MOTOR
 NUM. KV TIPO   MOD/     MW/     MW/     MW/     MW/   Mvar/     MW/
     NOME       ANG     Mvar    Mvar    Mvar    Mvar   EQUIV    Mvar  PARA BARRA                    FLUXOS
                                                FLUXO % SHUNT L         NUM.     NOME     NC     MW    Mvar  MVA/V_d   TAP  DEFAS TIE
X------------X-------X-------X-------X-------X-------X-------X-------X----X------------X--X-------X-------X-------X------X-----X---X
```

```
 5105   14  0   1.028     0.0     0.0     0.0     0.0     0.0     0.0
 AGL13.8 04T3  -150.8     0.0     0.0     0.0     0.0     0.0     0.0
                                                 0.0%                 5107 AGL FIC 04T3  1     0.0     0.0     0.0
 5106   14  0   1.018     0.0     0.0     3.6     0.0     0.0     0.0
 AGL-TIP.-013  -151.7     0.0     0.0     1.8     0.0     0.0     0.0
                                                40.3%                 5103 ANGELIM--069  1    -1.8    -0.9     2.0
                                                38.0%                 5103 ANGELIM--069  2    -1.7    -0.9     1.9
 5107   14  0   1.028     0.0     0.0     0.0     0.0     0.0     0.0
 AGL FIC 04T3  -150.8     0.0     0.0     0.0     0.0     0.0     0.0
                                                70.6%                 5101 ANGELIM--230  1   -69.9   -19.6    70.6
                                                 0.7%                 5103 ANGELIM--069  1    69.9    19.6    70.6 1.000F
                                                 0.0%                 5105 AGL13.8 04T3  1     0.0     0.0     0.0 1.000F
 5110  230  0   0.993     0.0     0.0     0.0     0.0     0.0     0.0
 SALGEMA--230  -149.9     0.0     0.0     0.0     0.0     0.0     0.0
                                                69.8%                 5111 R.LARGO--230  1  -200.6   -78.6   217.0
                                                 1.0%                 5115 SGM----A-013  1    91.2    50.4   104.9 0.914*        62
                                                 0.6%                 5116 SGM----B-013  1    54.7    22.9    59.7 0.952*        62
                                                 0.6%                 5117 SGM----C-013  1    54.7     5.3    55.3 0.988*        62
 5111  230  0   1.020     0.0     0.0     0.0     0.0     0.0     0.0
 R.LARGO--230  -147.5     0.0     0.0     0.0     0.0     0.0     0.0
                                                69.3%                 5110 SALGEMA--230  1   202.6    85.3   215.5
                                                35.5%                 5113 R.LARGO--069  1    35.0    -9.4    35.5 1.003*
                                                35.6%                 5113 R.LARGO--069  2    35.0    -9.4    35.6 1.003*
                                                28.5%                 5291 PENEDO---230  1    89.4    12.3    88.5
                                                38.1%                 5301 MESSIAS--230  1  -118.5   -26.2   119.0
                                                44.4%                 5301 MESSIAS--230  2  -121.7   -26.3   122.1
                                                44.9%                 5301 MESSIAS--230  3  -121.7   -26.3   122.1
 5113   69  0   1.029     0.0     0.0    70.0     0.0    45.1     0.0
 R.LARGO--069  -150.0     0.0     0.0    23.0     0.0     0.0     0.0
                                                35.6%                 5111 R.LARGO--230  1   -35.0    11.0    35.6
                                                35.7%                 5111 R.LARGO--230  2   -35.0    11.1    35.7
                                                 0.0%                 5114 R.LARGO--013  1     0.0     0.0     0.0 1.000F
 5114   14  0   1.029     0.0     0.0     0.0     0.0     0.0     0.0
 R.LARGO--013  -150.0     0.0     0.0     0.0     0.0     0.0     0.0
                                                 0.0%                 5113 R.LARGO--069  1     0.0     0.0     0.0
 5118   14  0   1.040     0.0     0.0     0.0     0.0     5.5     0.0
 SGM---A1-013  -160.9     0.0     0.0     0.0     0.0     0.0     0.0
                                                 0.1%                 5115 SGM----A-013  1     0.0     5.5     5.3              62
CEPEL - CENTRO DE PESQUISAS DE ENERGIA ELETRICA - PROGRAMA DE ANALISE DE REDES - V08MAR05A                              PAG. 448

ANUAL 06/07 * SETEMBRO 2006 PESADA S/SE 19H N/NE 19H * ANAT0 - FSE - C13
RELATORIO COMPLETO DO SISTEMA * AREA 55 * *        CHESF (AREA LESTE)        *

X----------------- D A D O S  -  B A R R A ------------------------X------------ F L U X O S  -  C I R C U I T O S ------------X
 DA BARRA      TENSAO GERACAO INJ EQV  CARGA   ELO CC  SHUNT    MOTOR
 NUM. KV TIPO   MOD/     MW/     MW/     MW/     MW/   Mvar/     MW/
     NOME       ANG     Mvar    Mvar    Mvar    Mvar   EQUIV    Mvar  PARA BARRA                  FLUXOS
                                                FLUXO % SHUNT L         NUM.     NOME     NC     MW    Mvar  MVA/V_d   TAP  DEFAS TIE
X------------X-------X-------X-------X-------X-------X-------X-------X----X------------X--X-------X-------X-------X------X-----X---X

 5119   14  0   1.040     0.0     0.0     0.0     0.0     5.5     0.0
 SGM---B1-013  -156.7     0.0     0.0     0.0     0.0     0.0     0.0
                                                 0.1%                 5116 SGM----B-013  1     0.0     5.5     5.3              62
 5120   14  0   1.047     0.0     0.0     0.0     0.0    21.9     0.0
 SGM---C1-013  -155.5     0.0     0.0     0.0     0.0     0.0     0.0
                                                 0.2%                 5117 SGM----C-013  1     0.0    21.9    20.9              62
 5121  230  0   1.022     0.0     0.0     0.0     0.0     0.0     0.0
 TACAIMBO-230  -149.4     0.0     0.0     0.0     0.0     0.0     0.0
                                                36.1%                 5101 ANGELIM--230  1  -117.5     7.8   115.2
```

```
                                                   35.2%                 5101 ANGELIM--230  2  -114.4     7.0   112.1
                                                   35.8%                 5101 ANGELIM--230  3  -114.7     7.5   112.4
                                                   60.9%                 5123 TACAIMBO-069  1    59.2    19.4    60.9 0.986*
                                                   63.9%                 5123 TACAIMBO-069  2    62.1    20.4    63.9 0.986*
                                                   36.2%                 5222 C.GRANDE-230  1   113.5   -31.6   115.2
                                                   35.7%                 5222 C.GRANDE-230  2   111.9   -30.6   113.4
 5123   69  0   1.014     0.0     0.0   121.2     0.0     0.0     0.0
 TACAIMBO-069  -153.8     0.0     0.0    29.8     0.0     0.0     0.0
                                                   60.1%                 5121 TACAIMBO-230  1   -59.2   -14.5    60.1
                                                   63.0%                 5121 TACAIMBO-230  2   -62.1   -15.3    63.0
                                                    0.0%                 5125 TACAIMBO-013  1     0.0     0.0     0.0 0.975F
 5125   14  0   1.040     0.0     0.0     0.0     0.0     0.0     0.0
 TACAIMBO-013  -153.8     0.0     0.0     0.0     0.0     0.0     0.0
                                                    0.0%                 5123 TACAIMBO-069  1     0.0     0.0     0.0
 5131  230  0   1.007     0.0     0.0    28.1     0.0     0.0     0.0
 PIRAPAMA-230  -149.5     0.0     0.0     4.3     0.0     0.0     0.0
                                                   90.6%                 5133 PIRAPAMA-069  1    86.5    28.9    90.6 0.978*
                                                   85.7%                 5133 PIRAPAMA-069  2    81.9    27.3    85.7 0.978*
                                                   89.3%                 5133 PIRAPAMA-069  3    85.3    28.5    89.3 0.978*
                                                   21.6%                 5141 RCD-BP-1-230  1    46.5   -75.8    88.3
                                                   21.7%                 5142 RCD-BP-2-230  1    42.3   -78.8    88.8
                                                    1.9%                 5150 TERMOPE--230  1  -185.3    32.8   186.9
                                                    1.9%                 5150 TERMOPE--230  2  -185.3    32.8   186.9
 5133   69  0   1.000     0.0     0.0   253.7     0.0    20.4     0.0
 PIRAPAMA-069  -155.6     0.0     0.0    75.9     0.0     0.0     0.0
                                                   88.6%                 5131 PIRAPAMA-230  1   -86.5   -18.9    88.6
                                                   83.8%                 5131 PIRAPAMA-230  2   -81.9   -17.9    83.8
                                                   87.3%                 5131 PIRAPAMA-230  3   -85.3   -18.7    87.3
CEPEL - CENTRO DE PESQUISAS DE ENERGIA ELETRICA - PROGRAMA DE ANALISE DE REDES - V08MAR05A                              PAG. 449

ANUAL 06/07 * SETEMBRO 2006 PESADA S/SE 19H N/NE 19H * ANAT0 - FSE - C13
RELATORIO COMPLETO DO SISTEMA * AREA 55 * *        CHESF (AREA LESTE)        *

X----------------- D A D O S  -  B A R R A -------------------------X------------- F L U X O S  -  C I R C U I T O S -------------X
 DA BARRA      TENSAO GERACAO INJ EQV  CARGA   ELO CC  SHUNT    MOTOR
 NUM. KV TIPO   MOD/     MW/     MW/     MW/     MW/   Mvar/     MW/
     NOME       ANG     Mvar    Mvar    Mvar    Mvar   EQUIV    Mvar  PARA BARRA                    FLUXOS
                                                FLUXO % SHUNT L        NUM.     NOME     NC     MW    Mvar  MVA/V_d   TAP  DEFAS TIE
X------------X-------X-------X-------X-------X-------X-------X-------X----X------------X--X-------X-------X-------X------X-----X---X

 5140  500  0   1.031     0.0     0.0     0.0     0.0     0.0     0.0
 RECIFEII-500  -148.1     0.0     0.0     0.0     0.0     0.0     0.0
                                                   31.2%                 5100 ANGELIM--500  1  -490.7  -104.8   486.5
                                                   31.1%                 5100 ANGELIM--500  2  -487.4  -115.6   485.6
                                                   48.9%                 5141 RCD-BP-1-230  1   296.8    59.1   293.4
                                                   48.9%                 5141 RCD-BP-1-230  2   296.8    59.1   293.4
                                                   48.3%                 5142 RCD-BP-2-230  1   288.9    76.7   289.7
                                                   55.6%                 5142 RCD-BP-2-230  2   332.4    88.3   333.4
                                                   15.2%                 5300 MESSIAS--500  1  -236.8   -62.7   237.5
 5141  230  0   1.024     0.0     0.0     0.0     0.0     0.0     0.0
 RCD-BP-1-230  -150.4     0.0     0.0     0.0     0.0     0.0     0.0
                                                   20.0%                 5101 ANGELIM--230  1   -53.5    -6.7    52.7
                                                   20.5%                 5131 PIRAPAMA-230  1   -46.1    72.6    84.0
                                                   48.9%                 5140 RECIFEII-500  1  -296.8   -47.0   293.5 1.000*
                                                   48.9%                 5140 RECIFEII-500  2  -296.8   -47.0   293.5 1.000*
                                                   14.2%                 5144 RCD-CS-1-000  1     0.0   -43.6    42.5 1.054F
                                                   29.1%                 5181 P.FERRO--230  1   142.0    -7.7   138.9
                                                   42.1%                 5191 MIRUEIRA-230  1   133.6    10.2   130.8
                                                   45.9%                 5201 GOIANINH-230  1   155.5    11.5   152.3
                                                    5.3%                 5281 RIBEIRAO-230  1    11.6     8.4    14.0
```

```
                                                 40.1%                 5331 JOAIRAM--230  1   125.3    24.6   124.7
                                                 40.1%                 5331 JOAIRAM--230  2   125.3    24.6   124.7
 5142  230  0   1.025     0.0     0.0     0.0     0.0     0.0     0.0
 RCD-BP-2-230  -150.3     0.0     0.0     0.0     0.0     0.0     0.0
                                                 19.8%                 5101 ANGELIM--230  1   -52.9    -6.3    52.0
                                                 20.6%                 5131 PIRAPAMA-230  1   -41.9    75.6    84.3
                                                 48.1%                 5140 RECIFEII-500  1  -288.9   -64.9   288.8 1.003*
                                                 55.4%                 5140 RECIFEII-500  2  -332.4   -74.7   332.4 1.003*
                                                 43.6%                 5162 SCHIN-PE 230  1   138.3    13.0   135.5
                                                 29.9%                 5181 P.FERRO--230  1   146.3    -4.5   142.7
                                                 52.0%                 5191 MIRUEIRA-230  1   137.9    13.0   135.1
                                                 46.4%                 5201 GOIANINH-230  1   157.4    12.8   154.1
                                                 28.7%                 5331 JOAIRAM--230  1   136.2    36.0   137.4
 5144    1  0   0.971     0.0     0.0     0.0     0.0     0.0     0.0
 RCD-CS-1-000  -150.4     0.0     0.0     0.0     0.0     0.0     0.0
                                                 14.9%                 5141 RCD-BP-1-230  1     0.0    43.5    44.8
                                                 14.9%                 5145 RCD-SIE--1CS  1     0.0   -21.8    22.4 1.000F
                                                 14.9%                 5147 RCD-ALS--1CS  1     0.0   -21.8    22.4 1.000F
 5145    1  1   0.990     0.0     0.0     0.0     0.0     0.0     0.0
 RCD-SIE--1CS  -150.4    22.2     0.0     0.0     0.0     0.0     0.0
                                                 14.9%                 5144 RCD-CS-1-000  1     0.0    22.2    22.4
CEPEL - CENTRO DE PESQUISAS DE ENERGIA ELETRICA - PROGRAMA DE ANALISE DE REDES - V08MAR05A                                PAG. 450

ANUAL 06/07 * SETEMBRO 2006 PESADA S/SE 19H N/NE 19H * ANAT0 - FSE - C13
RELATORIO COMPLETO DO SISTEMA * AREA 55 * *        CHESF (AREA LESTE)        *

X----------------- D A D O S  -  B A R R A ------------------------X------------ F L U X O S  -  C I R C U I T O S ------------X
 DA BARRA      TENSAO GERACAO INJ EQV  CARGA   ELO CC  SHUNT    MOTOR
 NUM. KV TIPO   MOD/     MW/     MW/     MW/     MW/   Mvar/     MW/
     NOME       ANG     Mvar    Mvar    Mvar    Mvar   EQUIV    Mvar  PARA BARRA                    FLUXOS
                                                FLUXO % SHUNT L         NUM.     NOME     NC     MW    Mvar  MVA/V_d   TAP  DEFAS TIE
X------------X-------X-------X-------X-------X-------X-------X-------X----X------------X--X-------X-------X-------X------X-----X---X

 5147    1  1   0.990     0.0     0.0     0.0     0.0     0.0     0.0
 RCD-ALS--1CS  -150.4    22.2     0.0     0.0     0.0     0.0     0.0
                                                 14.9%                 5144 RCD-CS-1-000  1     0.0    22.2    22.4
 5150  230  0   1.006     0.0     0.0     0.0     0.0     0.0     0.0
 TERMOPE--230  -147.4     0.0     0.0     0.0     0.0     0.0     0.0
                                                  1.9%                 5131 PIRAPAMA-230  1   186.3   -33.0   188.2
                                                  1.9%                 5131 PIRAPAMA-230  2   186.3   -33.0   188.2
                                             SUP 112.9%                 5151 TERMOPEG-2GR  1  -235.0    39.9   237.0 0.996F
                                                  0.0%                 5153 TERMOPEG-0MQ  1     0.0     0.0     0.0 0.996F
                                                 48.0%                 5154 TERMOPEV-1GR  1  -137.6    26.1   139.3 0.996F
 5151    1  1   1.000   235.0     0.0     0.0     0.0     0.0     0.0
 TERMOPEG-2GR  -143.3   -22.7     0.0     0.0     0.0     0.0     0.0
                                             SUP 112.4%                 5150 TERMOPE--230  1   235.0   -22.7   236.1
 5152  230  0   1.018     0.0     0.0     6.7     0.0     0.0     0.0
 BONGI----230  -151.1     0.0     0.0    -1.7     0.0     0.0     0.0
                                                 53.0%                 5156 BONGI----069  1    53.7     4.7    53.0 1.015*
                                                 53.0%                 5156 BONGI----069  2    53.7     4.7    53.0 1.015*
                                                 47.5%                 5156 BONGI----069  3    48.2     4.3    47.5 1.015*
                                                 54.9%                 5156 BONGI----069  4    55.7     4.9    54.9 1.015*
                                                 57.6%                 5157 BGI-RLT6-013  1    18.4    14.6    23.0 0.965*
                                                 89.5%                 5159 BGI-RLT7-013  1    27.4    24.0    35.8 0.985F
                                                  0.0%                 5171 BONGI-G1-013  1     0.0     0.0     0.0 1.025F
                                                  0.0%                 5172 BONGI-G2-013  1     0.0     0.0     0.0 1.025F
                                                  0.0%                 5175 BONGI-G4-013  1     0.0     0.0     0.0 1.025F
                                                 30.5%                 5331 JOAIRAM--230  1   -94.8   -19.3    95.0
                                                 30.5%                 5331 JOAIRAM--230  2   -94.8   -19.3    95.0
                                                 24.1%                 5331 JOAIRAM--230  3   -74.4   -17.0    74.9
```

```
 5153    1  0   1.010     0.0     0.0     0.0     0.0     0.0     0.0
 TERMOPEG-0MQ  -147.4     0.0     0.0     0.0     0.0     0.0     0.0
                                                 0.0%                 5150 TERMOPE--230  1     0.0     0.0     0.0
 5154    1  1   1.000   137.6     0.0     0.0     0.0     0.0     0.0
 TERMOPEV-1GR  -143.9   -17.6     0.0     0.0     0.0     0.0     0.0
                                                47.8%                 5150 TERMOPE--230  1   137.6   -17.6   138.7
 5156   69  0   1.000     0.0     0.0   208.4     0.0    40.8     0.0
 BONGI----069  -155.2     0.0     0.0    43.4     0.0     0.0     0.0
                                                53.7%                 5152 BONGI----230  1   -53.7    -0.9    53.7
                                                53.7%                 5152 BONGI----230  2   -53.7    -0.9    53.7
                                                48.2%                 5152 BONGI----230  3   -48.2    -0.8    48.2
                                                55.7%                 5152 BONGI----230  4   -55.7    -1.0    55.7
                                                 0.0%                 5161 BONGI-T9-013  1     0.0     0.0     0.0 0.985F
                                                37.3%                 5163 BONGI-T8-013  1     1.5     1.1     1.9 0.985F
                                                30.5%                 5163 BONGI-T8-013  2     1.5    -0.1     1.5 1.000F
CEPEL - CENTRO DE PESQUISAS DE ENERGIA ELETRICA - PROGRAMA DE ANALISE DE REDES - V08MAR05A                              PAG. 451

ANUAL 06/07 * SETEMBRO 2006 PESADA S/SE 19H N/NE 19H * ANAT0 - FSE - C13
RELATORIO COMPLETO DO SISTEMA * AREA 55 * *        CHESF (AREA LESTE)        *

X----------------- D A D O S  -  B A R R A ------------------------X------------ F L U X O S  -  C I R C U I T O S ------------X
 DA BARRA      TENSAO GERACAO INJ EQV  CARGA   ELO CC  SHUNT    MOTOR
 NUM. KV TIPO   MOD/     MW/     MW/     MW/     MW/   Mvar/     MW/
     NOME       ANG     Mvar    Mvar    Mvar    Mvar   EQUIV    Mvar  PARA BARRA                    FLUXOS
                                                FLUXO % SHUNT L         NUM.     NOME     NC     MW    Mvar  MVA/V_d   TAP  DEFAS TIE
X------------X-------X-------X-------X-------X-------X-------X-------X----X------------X--X-------X-------X-------X------X-----X---X

 5157   14  0   1.021     0.0     0.0     0.0     0.0     0.0     0.0
 BGI-RLT6-013  -153.6     0.0     0.0     0.0     0.0     0.0     0.0
                                                55.6%                 5152 BONGI----230  1   -18.4   -13.3    22.2
                                                 0.2%                 5158 BONGI-T6-013  1    18.4    13.3    22.2 1.000F
 5158   14  0   1.000     0.0     0.0    18.4     0.0     0.0     0.0
 BONGI-T6-013  -155.3     0.0     0.0    12.5     0.0     0.0     0.0
                                                 0.2%                 5157 BGI-RLT6-013  1   -18.4   -12.5    22.2
 5159   14  0   0.974     0.0     0.0     0.0     0.0     0.0     0.0
 BGI-RLT7-013  -155.4     0.0     0.0     0.0     0.0     0.0     0.0
                                                88.1%                 5152 BONGI----230  1   -27.4   -20.7    35.2
                                                 0.4%                 5160 BGI-T7K1-013  1    27.4    20.7    35.2 0.985F
 5160   14  0   0.955     0.0     0.0    27.4     0.0     0.0     0.0
 BGI-T7K1-013  -158.1     0.0     0.0    18.7     0.0     0.0     0.0
                                                 0.3%                 5159 BGI-RLT7-013  1   -27.4   -18.7    34.7
 5161   14  0   1.015     0.0     0.0     0.0     0.0     0.0     0.0
 BONGI-T9-013  -155.2     0.0     0.0     0.0     0.0     0.0     0.0
                                                 0.0%                 5156 BONGI----069  1     0.0     0.0     0.0
 5162  230  0   1.015     0.0     0.0     3.5     0.0     0.0     0.0
 SCHIN-PE 230  -152.4     0.0     0.0     0.3     0.0     0.0     0.0
                                                43.7%                 5142 RCD-BP-2-230  1  -137.3   -12.9   136.0
                                                42.6%                 5191 MIRUEIRA-230  1   133.8    12.6   132.5
 5163   14  0   1.001     0.0     0.0     3.0     0.0     0.0     0.0
 BONGI-T8-013  -156.3     0.0     0.0     1.0     0.0     0.0     0.0
                                                36.7%                 5156 BONGI----069  1    -1.5    -1.1     1.8
                                                30.5%                 5156 BONGI----069  2    -1.5     0.1     1.5
 5171   14  0   0.994     0.0     0.0     0.0     0.0     0.0     0.0
 BONGI-G1-013  -151.1     0.0     0.0     0.0     0.0     0.0     0.0
                                                 0.0%                 5152 BONGI----230  1     0.0     0.0     0.0
 5172   14  0   0.994     0.0     0.0     0.0     0.0     0.0     0.0
 BONGI-G2-013  -151.1     0.0     0.0     0.0     0.0     0.0     0.0
                                                 0.0%                 5152 BONGI----230  1     0.0     0.0     0.0
 5175   14  0   0.994     0.0     0.0     0.0     0.0     0.0     0.0
 BONGI-G4-013  -151.1     0.0     0.0     0.0     0.0     0.0     0.0
```

```
                                                 0.0%                 5152 BONGI----230  1     0.0     0.0     0.0
CEPEL - CENTRO DE PESQUISAS DE ENERGIA ELETRICA - PROGRAMA DE ANALISE DE REDES - V08MAR05A                                PAG. 452

ANUAL 06/07 * SETEMBRO 2006 PESADA S/SE 19H N/NE 19H * ANAT0 - FSE - C13
RELATORIO COMPLETO DO SISTEMA * AREA 55 * *        CHESF (AREA LESTE)        *

X----------------- D A D O S  -  B A R R A -------------------------X------------ F L U X O S  -  C I R C U I T O S ------------X
 DA BARRA      TENSAO GERACAO INJ EQV  CARGA   ELO CC  SHUNT    MOTOR
 NUM. KV TIPO   MOD/     MW/     MW/     MW/     MW/   Mvar/     MW/
     NOME       ANG     Mvar    Mvar    Mvar    Mvar   EQUIV    Mvar  PARA BARRA                    FLUXOS
                                                FLUXO % SHUNT L        NUM.     NOME     NC     MW    Mvar  MVA/V_d   TAP  DEFAS TIE
X------------X-------X-------X-------X-------X-------X-------X-------X----X------------X--X-------X-------X-------X------X-----X---X

 5181  230  0   1.020     0.0     0.0     0.0     0.0     0.0     0.0
 P.FERRO--230  -152.6     0.0     0.0     0.0     0.0     0.0     0.0
                                                29.0%                 5141 RCD-BP-1-230  1  -141.3     2.2   138.5
                                                29.8%                 5142 RCD-BP-2-230  1  -145.5    -0.7   142.6
                                                45.5%                 5183 P.FERRO--069  1    43.4    16.6    45.5 1.001*
                                                45.4%                 5183 P.FERRO--069  2    43.3    16.5    45.4 1.001*
                                                 8.7%                 5191 MIRUEIRA-230  1    13.0    40.4    41.6
                                                15.7%                 5222 C.GRANDE-230  1    93.5   -37.5    98.8
                                                20.7%                 5222 C.GRANDE-230  2    93.5   -37.4    98.8
 5183   69  0   1.000     0.0     0.0    86.7     0.0     0.0     0.0
 P.FERRO--069  -155.6     0.0     0.0    27.9     0.0     0.0     0.0
                                                45.6%                 5181 P.FERRO--230  1   -43.4   -14.0    45.6
                                                45.5%                 5181 P.FERRO--230  2   -43.3   -13.9    45.5
 5191  230  0   1.013     0.0     0.0     0.0     0.0     0.0     0.0
 MIRUEIRA-230  -152.6     0.0     0.0     0.0     0.0     0.0     0.0
                                                42.2%                 5141 RCD-BP-1-230  1  -132.6   -10.5   131.2
                                                52.2%                 5142 RCD-BP-2-230  1  -136.8   -12.8   135.6
                                                42.6%                 5162 SCHIN-PE 230  1  -133.7   -12.6   132.6
                                                 9.8%                 5181 P.FERRO--230  1   -12.9   -45.9    47.0
                                                68.1%                 5193 MIRUEIRA-069  1    66.7    17.7    68.1 0.979*
                                                68.5%                 5193 MIRUEIRA-069  2    67.1    17.8    68.5 0.979*
                                                68.8%                 5193 MIRUEIRA-069  3    67.4    17.9    68.8 0.979*
                                                74.8%                 5193 MIRUEIRA-069  4    73.3    19.4    74.8 0.979*
                                                44.6%                 5201 GOIANINH-230  1   141.6     9.0   140.1
 5193   69  0   1.014     0.0     0.0   274.4     0.0    42.0     0.0
 MIRUEIRA-069  -157.9     0.0     0.0    88.2     0.0     0.0     0.0
                                                66.7%                 5191 MIRUEIRA-230  1   -66.7   -11.2    66.7
                                                67.1%                 5191 MIRUEIRA-230  2   -67.1   -11.3    67.1
                                                67.4%                 5191 MIRUEIRA-230  3   -67.4   -11.4    67.4
                                                73.3%                 5191 MIRUEIRA-230  4   -73.3   -12.4    73.3
                                                 0.0%                 5194 MIRUEIR2-013  1     0.0     0.0     0.0 1.000F
                                                 0.0%                 5195 MIRUEIRA-013  1     0.0     0.0     0.0 1.000F
                                                 0.0%                 5196 MIRUEIR3-013  1     0.0     0.0     0.0 1.000F
                                                 0.0%                 5197 MIRUEIRA-013  1     0.0     0.0     0.0 1.000F
 5194   14  0   1.014     0.0     0.0     0.0     0.0     0.0     0.0
 MIRUEIR2-013  -157.9     0.0     0.0     0.0     0.0     0.0     0.0
                                                 0.0%                 5193 MIRUEIRA-069  1     0.0     0.0     0.0
 5195   14  0   1.014     0.0     0.0     0.0     0.0     0.0     0.0
 MIRUEIRA-013  -157.9     0.0     0.0     0.0     0.0     0.0     0.0
                                                 0.0%                 5193 MIRUEIRA-069  1     0.0     0.0     0.0
CEPEL - CENTRO DE PESQUISAS DE ENERGIA ELETRICA - PROGRAMA DE ANALISE DE REDES - V08MAR05A                                PAG. 453

ANUAL 06/07 * SETEMBRO 2006 PESADA S/SE 19H N/NE 19H * ANAT0 - FSE - C13
RELATORIO COMPLETO DO SISTEMA * AREA 55 * *        CHESF (AREA LESTE)        *

X----------------- D A D O S  -  B A R R A -------------------------X------------ F L U X O S  -  C I R C U I T O S ------------X
 DA BARRA      TENSAO GERACAO INJ EQV  CARGA   ELO CC  SHUNT    MOTOR
```

```
 NUM. KV TIPO   MOD/     MW/     MW/     MW/     MW/   Mvar/     MW/
     NOME       ANG     Mvar    Mvar    Mvar    Mvar   EQUIV    Mvar  PARA BARRA                    FLUXOS
                                                FLUXO % SHUNT L         NUM.     NOME     NC     MW    Mvar  MVA/V_d   TAP  DEFAS TIE
X------------X-------X-------X-------X-------X-------X-------X-------X----X------------X--X-------X-------X-------X------X-----X---X

 5196   14  0   1.014     0.0     0.0     0.0     0.0     0.0     0.0
 MIRUEIR3-013  -157.9     0.0     0.0     0.0     0.0     0.0     0.0
                                                 0.0%                  5193 MIRUEIRA-069  1     0.0     0.0     0.0
 5197   14  0   1.014     0.0     0.0     0.0     0.0     0.0     0.0
 MIRUEIRA-013  -157.9     0.0     0.0     0.0     0.0     0.0     0.0
                                                 0.0%                  5193 MIRUEIRA-069  1     0.0     0.0     0.0
 5201  230  0   0.998     0.0     0.0     0.0     0.0     0.0     0.0
 GOIANINH-230  -156.1     0.0     0.0     0.0     0.0     0.0     0.0
                                                46.1%                  5141 RCD-BP-1-230  1  -152.5    -8.2   153.1
                                                46.7%                  5142 RCD-BP-2-230  1  -154.3    -9.2   155.0
                                                44.8%                  5191 MIRUEIRA-230  1  -140.0   -10.0   140.7
                                                58.6%                  5203 GOIANINH-069  1    56.7    14.3    58.6 0.969*
                                                58.0%                  5203 GOIANINH-069  2    56.1    14.1    58.0 0.969*
                                                59.3%                  5203 GOIANINH-069  3    57.4    14.4    59.3 0.969*
                                                34.2%                  5211 MUSSURE--230  1    88.2     9.0    88.9
                                                34.1%                  5211 MUSSURE--230  2    88.1     9.4    88.7
                                                45.2%                  5211 MUSSURE--230  3    89.7     9.7    90.4
                                                15.6%                  5222 C.GRANDE-230  1    10.7   -43.4    44.8
 5203   69  0   1.014     0.0     0.0   170.2     0.0    21.9     0.0
 GOIANINH-069  -160.2     0.0     0.0    56.0     0.0     0.0     0.0
                                                56.8%                  5201 GOIANINH-230  1   -56.7   -10.0    56.8
                                                56.2%                  5201 GOIANINH-230  2   -56.1    -9.9    56.2
                                                57.5%                  5201 GOIANINH-230  3   -57.4   -10.1    57.5
                                                 0.0%                  5204 GNN-RLT1-000  1     0.0    -4.0     4.0 1.000F
                                                 0.0%                  5206 GNN--T2--013  1     0.0     0.0     0.0 1.000F
 5204    1  0   1.020     0.0     0.0     0.0     0.0     0.0     0.0
 GNN-RLT1-000  -160.2     0.0     0.0     0.0     0.0     0.0     0.0
                                                 0.0%                  5203 GOIANINH-069  1     0.0     4.0     4.0
                                                 0.0%                  5205 GNN--T1--1CS  1     0.0    -4.0     4.0 1.000F
 5205    1  1   1.030     0.0     0.0     0.0     0.0     0.0     0.0
 GNN--T1--1CS  -160.2     4.1     0.0     0.0     0.0     0.0     0.0
                                                 0.0%                  5204 GNN-RLT1-000  1     0.0     4.1     4.0
 5206   14  0   1.014     0.0     0.0     0.0     0.0     0.0     0.0
 GNN--T2--013  -160.2     0.0     0.0     0.0     0.0     0.0     0.0
                                                 0.0%                  5203 GOIANINH-069  1     0.0     0.0     0.0
```





```
X----------------- D A D O S  -  B A R R A ------------------------X------------ F L U X O S  -  C I R C U I T O S ------------X
 DA BARRA      TENSAO GERACAO INJ EQV  CARGA   ELO CC  SHUNT    MOTOR
 NUM. KV TIPO   MOD/     MW/     MW/     MW/     MW/   Mvar/     MW/
     NOME       ANG     Mvar    Mvar    Mvar    Mvar   EQUIV    Mvar  PARA BARRA                    FLUXOS
                                                FLUXO % SHUNT L         NUM.     NOME     NC     MW    Mvar  MVA/V_d   TAP  DEFAS TIE
X------------X-------X-------X-------X-------X-------X-------X-------X----X------------X--X-------X-------X-------X------X-----X---X

 5211  230  0   0.983     0.0     0.0     0.0     0.0     0.0     0.0
 MUSSURE--230  -158.6     0.0     0.0     0.0     0.0     0.0     0.0
                                                34.6%                  5201 GOIANINH-230  1   -87.5   -14.0    90.1
                                                34.6%                  5201 GOIANINH-230  2   -87.3   -14.0    89.9
                                                45.8%                  5201 GOIANINH-230  3   -89.0   -14.4    91.6
                                                66.5%                  5213 MUSSURE--069  1    64.6    10.4    66.5 0.947*
                                                67.6%                  5213 MUSSURE--069  2    65.7    10.5    67.6 0.947*
                                                67.4%                  5213 MUSSURE--069  3    65.4    10.5    67.4 0.947*
```

```
                                                                 70.0%                  5213 MUSSURE--069  4    68.0    10.9    70.0 0.947*
 5213   69  0   1.029     0.0     0.0   263.7     0.0    45.1     0.0
 MUSSURE--069  -163.1     0.0     0.0    66.1     0.0     0.0     0.0
                                                                 63.0%                  5211 MUSSURE--230  1   -64.6    -5.1    63.0
                                                                 64.0%                  5211 MUSSURE--230  2   -65.7    -5.2    64.0
                                                                 63.8%                  5211 MUSSURE--230  3   -65.4    -5.2    63.8
                                                                 66.3%                  5211 MUSSURE--230  4   -68.0    -5.4    66.3
                                                                  0.0%                  5214 MUSSURE2-013  1     0.0     0.0     0.0 1.000F
                                                                  0.0%                  5215 MUSSURE1-013  1     0.0     0.0     0.0 1.000F
 5214   14  0   1.029     0.0     0.0     0.0     0.0     0.0     0.0
 MUSSURE2-013  -163.1     0.0     0.0     0.0     0.0     0.0     0.0
                                                                  0.0%                  5213 MUSSURE--069  1     0.0     0.0     0.0
 5215   14  0   1.029     0.0     0.0     0.0     0.0     0.0     0.0
 MUSSURE1-013  -163.1     0.0     0.0     0.0     0.0     0.0     0.0
                                                                  0.0%                  5213 MUSSURE--069  1     0.0     0.0     0.0
 5222  230  0   1.030     0.0     0.0     0.0     0.0     0.0     0.0
 C.GRANDE-230  -157.0     0.0     0.0     0.0     0.0     0.0     0.0
                                                                 80.6%                  5101 ANGELIM--230  1  -165.2    16.3   161.2
                                                                 34.6%                  5121 TACAIMBO-230  1  -110.6    24.2   109.9
                                                                 34.1%                  5121 TACAIMBO-230  2  -109.1    23.5   108.3
                                                                 14.4%                  5181 P.FERRO--230  1   -92.5    11.9    90.6
                                                                 18.9%                  5181 P.FERRO--230  2   -92.5    12.0    90.6
                                                                  9.9%                  5201 GOIANINH-230  1   -10.4    27.4    28.5
                                                                 61.3%                  5226 CGD------069  1    61.0    16.5    61.3 0.971*
                                                                 56.9%                  5226 CGD------069  2    56.5    15.3    56.9 0.971*
                                                                 64.6%                  5226 CGD------069  3    64.2    17.4    64.6 0.971*
                                                                 39.9%                  5236 CGD---2--000  1    22.6    -0.1    21.9 1.000F
                                                                 44.2%                  5237 CGD---1--000  1    23.0     9.8    24.3 0.975F
                                                                  0.3%                  5239 CGD------1CE  1     0.0   -33.0    32.0 1.000F
                                                                 21.3%                  5241 NATAL-II-230  1    61.7   -29.5    66.4
                                                                 37.6%                  5241 NATAL-II-230  2   113.0   -41.6   116.9
                                                                 24.4%                  5241 NATAL-II-230  3   113.0   -41.6   116.9
                                                                 22.3%                  5254 PARAISO--230  1    65.5   -28.7    69.4
CEPEL - CENTRO DE PESQUISAS DE ENERGIA ELETRICA - PROGRAMA DE ANALISE DE REDES - V08MAR05A                                          PAG. 455

ANUAL 06/07 * SETEMBRO 2006 PESADA S/SE 19H N/NE 19H * ANAT0 - FSE - C13
RELATORIO COMPLETO DO SISTEMA * AREA 55 * *        CHESF (AREA LESTE)        *

X----------------- D A D O S  -  B A R R A -------------------------X------------ F L U X O S  -  C I R C U I T O S ------------X
 DA BARRA      TENSAO GERACAO INJ EQV  CARGA   ELO CC  SHUNT    MOTOR
 NUM. KV TIPO   MOD/     MW/     MW/     MW/     MW/   Mvar/     MW/
     NOME       ANG     Mvar    Mvar    Mvar    Mvar   EQUIV    Mvar  PARA BARRA                    FLUXOS
                                                FLUXO % SHUNT L         NUM.     NOME     NC     MW    Mvar  MVA/V_d   TAP  DEFAS TIE
X------------X-------X-------X-------X-------X-------X-------X-------X----X------------X--X-------X-------X-------X------X-----X---X

 5223   69  0   1.033     0.0     0.0     9.8     0.0     0.0     0.0
 CATOLE-D-069  -162.2     0.0     0.0     2.5     0.0     0.0     0.0
                                                                  0.0%                  5224 CATOLE---069  1     0.0     0.0     0.0
                                                                  0.3%                  5226 CGD------069  1   -34.5    -7.5    34.1
                                                                  0.2%                  5227 CGU------069  1    24.7     5.0    24.4
 5224   69  0   1.033     0.0     0.0     0.0     0.0     0.0     0.0
 CATOLE---069  -162.2     0.0     0.0     0.0     0.0     0.0     0.0
                                                                  0.0%                  5223 CATOLE-D-069  1     0.0     0.0     0.0
                                                                  0.0%                  5225 CATOLE---013  1     0.0     0.0     0.0 1.000F
 5225   14  0   1.033     0.0     0.0     0.0     0.0     0.0     0.0
 CATOLE---013  -162.2     0.0     0.0     0.0     0.0     0.0     0.0
                                                                  0.0%                  5224 CATOLE---069  1     0.0     0.0     0.0
 5226   69  0   1.043     0.0     0.0    89.3     0.0     0.0     0.0
 CGD------069  -161.2     0.0     0.0    12.9     0.0     0.0     0.0
                                                                 59.5%                  5222 C.GRANDE-230  1   -61.0   -11.8    59.5
```

```
                                                 55.2%                 5222 C.GRANDE-230  2   -56.5   -11.0    55.2
                                                 62.7%                 5222 C.GRANDE-230  3   -64.2   -12.4    62.7
                                                  0.3%                 5223 CATOLE-D-069  1    34.7     8.1    34.1
                                                  0.3%                 5228 B.-VISTA-069  1    34.6     9.2    34.4
                                                 69.3%                 5230 CGD------013  1     7.1     1.5     6.9 1.000F
                                                 70.0%                 5230 CGD------013  2     7.1     1.6     7.0 1.000F
                                                 87.1%                 5230 CGD------013  3     8.9     1.9     8.7 1.000F
 5227   69  0   1.028     0.0     0.0    14.8     0.0     0.0     0.0
 CGU------069  -162.7     0.0     0.0     4.3     0.0     0.0     0.0
                                                  0.2%                 5223 CATOLE-D-069  1   -24.6    -4.8    24.4
                                                  0.1%                 5228 B.-VISTA-069  1    -9.0    -2.9     9.2
                                                  0.0%                 5233 CGU------013  1     3.2     0.6     3.2 1.000F
                                                  0.0%                 5233 CGU------013  2     3.0     0.6     3.0 1.000F
                                                  0.0%                 5233 CGU------013  3     3.0     0.5     2.9 1.000F
                                                  0.0%                 5233 CGU------013  4     4.8     0.9     4.7 1.000F
                                                  0.0%                 5233 CGU------013  5     4.8     0.9     4.8 1.000F
 5228   69  0   1.032     0.0     0.0     0.0     0.0     0.0     0.0
 B.-VISTA-069  -162.3     0.0     0.0     0.0     0.0     0.0     0.0
                                                  0.3%                 5226 CGD------069  1   -34.4    -8.6    34.4
                                                  0.1%                 5227 CGU------069  1     9.0     2.8     9.2
                                                  0.1%                 5229 B.VISTA--013  1    10.7     2.5    10.6 1.000F
                                                  0.1%                 5229 B.VISTA--013  2    10.7     2.5    10.6 1.000F
                                                  0.0%                 5234 B.VISTA2-013  1     4.0     0.8     4.0 1.000F
 5229   14  0   1.016     0.0     0.0    21.4     0.0     0.0     0.0
 B.VISTA--013  -167.2     0.0     0.0     3.1     0.0     0.0     0.0
                                                  0.1%                 5228 B.-VISTA-069  1   -10.7    -1.5    10.6
                                                  0.1%                 5228 B.-VISTA-069  2   -10.7    -1.5    10.6
CEPEL - CENTRO DE PESQUISAS DE ENERGIA ELETRICA - PROGRAMA DE ANALISE DE REDES - V08MAR05A                          PAG. 456

ANUAL 06/07 * SETEMBRO 2006 PESADA S/SE 19H N/NE 19H * ANAT0 - FSE - C13
RELATORIO COMPLETO DO SISTEMA * AREA 55 * *        CHESF (AREA LESTE)        *

X----------------- D A D O S  -  B A R R A ------------------------X------------ F L U X O S  -  C I R C U I T O S ------------X
 DA BARRA      TENSAO GERACAO INJ EQV  CARGA   ELO CC  SHUNT    MOTOR
 NUM. KV TIPO   MOD/     MW/     MW/     MW/     MW/   Mvar/     MW/
     NOME       ANG     Mvar    Mvar    Mvar    Mvar   EQUIV    Mvar  PARA BARRA                    FLUXOS
                                                FLUXO % SHUNT L        NUM.     NOME     NC     MW     Mvar  MVA/V_d   TAP  DEFAS TIE
X------------X-------X-------X-------X-------X-------X-------X-------X----X------------X--X-------X-------X-------X------X-----X---X

 5230   14  0   1.032     0.0     0.0    23.1     0.0     0.0     0.0
 CGD------013  -164.3     0.0     0.0     3.7     0.0     0.0     0.0
                                                 69.3%                 5226 CGD------069  1    -7.1    -1.1     6.9
                                                 70.0%                 5226 CGD------069  2    -7.1    -1.2     7.0
                                                 87.1%                 5226 CGD------069  3    -8.9    -1.4     8.7
 5231   14  0   1.031     0.0     0.0     0.0     0.0     0.0     0.0
 CGD-2----013  -158.8     0.0     0.0     0.0     0.0     0.0     0.0
                                                  0.0%                 5236 CGD---2--000  1     0.0     0.0     0.0
 5232   14  1   1.040     0.0     0.0     0.0     0.0     0.0     0.0
 CGD-1----013  -159.0    -0.7     0.0     0.0     0.0     0.0     0.0
                                                  0.0%                 5238 CGD-RL-1-013  1     0.0    -0.7     0.7 1.000F
 5233   14  0   1.021     0.0     0.0    18.8     0.0     0.0     0.0
 CGU------013  -164.9     0.0     0.0     2.7     0.0     0.0     0.0
                                                  0.0%                 5227 CGU------069  1    -3.2    -0.5     3.2
                                                  0.0%                 5227 CGU------069  2    -3.0    -0.4     3.0
                                                  0.0%                 5227 CGU------069  3    -3.0    -0.4     2.9
                                                  0.0%                 5227 CGU------069  4    -4.8    -0.7     4.7
                                                  0.0%                 5227 CGU------069  5    -4.8    -0.7     4.8
 5234   14  0   1.023     0.0     0.0     4.0     0.0     0.0     0.0
 B.VISTA2-013  -165.2     0.0     0.0     0.6     0.0     0.0     0.0
                                                  0.0%                 5228 B.-VISTA-069  1    -4.0    -0.6     4.0
```

```
 5235  138  0   1.032     0.0     0.0     0.0     0.0     0.0     0.0
 C.GRANDE-138  -160.6     0.0     0.0     0.0     0.0     0.0     0.0
                                                43.9%                 5236 CGD---2--000  1   -22.6     1.5    21.9
                                                46.9%                 5237 CGD---1--000  1   -23.0    -7.5    23.5
                                                19.2%                 5252 S.CRUZ---138  1    22.8     3.0    22.3
                                                19.2%                 5252 S.CRUZ---138  2    22.8     3.0    22.3
 5236    1  0   1.031     0.0     0.0     0.0     0.0     0.0     0.0
 CGD---2--000  -158.8     0.0     0.0     0.0     0.0     0.0     0.0
                                                39.9%                 5222 C.GRANDE-230  1   -22.6     0.8    21.9
                                                 0.0%                 5231 CGD-2----013  1     0.0     0.0     0.0 1.000F
                                                43.9%                 5235 C.GRANDE-138  1    22.6    -0.8    21.9 1.000F
 5237    1  0   1.042     0.0     0.0     0.0     0.0     0.0     0.0
 CGD---1--000  -159.0     0.0     0.0     0.0     0.0     0.0     0.0
                                                43.1%                 5222 C.GRANDE-230  1   -23.0    -8.9    23.7
                                                46.9%                 5235 C.GRANDE-138  1    23.0     8.2    23.5 1.000F
                                                 3.2%                 5238 CGD-RL-1-013  1     0.0     0.7     0.7 1.000F
CEPEL - CENTRO DE PESQUISAS DE ENERGIA ELETRICA - PROGRAMA DE ANALISE DE REDES - V08MAR05A                              PAG. 457

ANUAL 06/07 * SETEMBRO 2006 PESADA S/SE 19H N/NE 19H * ANAT0 - FSE - C13
RELATORIO COMPLETO DO SISTEMA * AREA 55 * *        CHESF (AREA LESTE)        *

X----------------- D A D O S  -  B A R R A -------------------------X------------ F L U X O S  -  C I R C U I T O S ------------X
 DA BARRA      TENSAO GERACAO INJ EQV  CARGA   ELO CC  SHUNT    MOTOR
 NUM. KV TIPO   MOD/     MW/     MW/     MW/     MW/   Mvar/     MW/
     NOME       ANG     Mvar    Mvar    Mvar    Mvar   EQUIV    Mvar  PARA BARRA                    FLUXOS
                                                FLUXO % SHUNT L        NUM.     NOME     NC     MW    Mvar  MVA/V_d   TAP  DEFAS TIE
X------------X-------X-------X-------X-------X-------X-------X-------X----X------------X--X-------X-------X-------X------X-----X---X

 5238   14  0   1.041     0.0     0.0     0.0     0.0     0.0     0.0
 CGD-RL-1-013  -159.0     0.0     0.0     0.0     0.0     0.0     0.0
                                                 0.0%                 5232 CGD-1----013  1     0.0     0.7     0.7
                                                 3.2%                 5237 CGD---1--000  1     0.0    -0.7     0.7
 5239    1  0   1.052     0.0     0.0     0.0     0.0     0.0     0.0
 CGD------1CE  -157.0    33.7     0.0     0.0     0.0     0.0     0.0
                                                 0.3%                 5222 C.GRANDE-230  1     0.0    33.7    32.0
 5241  230  0   1.032     0.0     0.0     0.0     0.0     0.0     0.0
 NATAL-II-230  -163.9     0.0     0.0     0.0     0.0     0.0     0.0
                                                18.8%                 5222 C.GRANDE-230  1   -60.3    -3.6    58.5
                                                34.6%                 5222 C.GRANDE-230  2  -110.9    -4.0   107.6
                                                22.5%                 5222 C.GRANDE-230  3  -110.9    -4.0   107.6
                                                81.1%                 5243 NATAL-II-069  1    83.6     3.8    81.1 1.020F
                                                81.8%                 5243 NATAL-II-069  2    84.3     3.8    81.8 1.020F
                                                80.3%                 5243 NATAL-II-069  3    82.8     3.8    80.3 1.020F
                                                83.3%                 5243 NATAL-II-069  4    85.9     3.9    83.3 1.020F
                                                16.8%                 5254 PARAISO--230  1   -54.4    -3.6    52.8
 5243   69 -1   1.013     0.0     0.0   336.6     0.0    43.7     0.0
 NATAL-II-069  -169.9    40.0     0.0    63.5     0.0     0.0     0.0
                                                82.7%                 5241 NATAL-II-230  1   -83.6     5.0    82.7
                                                83.4%                 5241 NATAL-II-230  2   -84.3     5.0    83.4
                                                81.9%                 5241 NATAL-II-230  3   -82.8     5.0    81.9
                                                85.0%                 5241 NATAL-II-230  4   -85.9     5.1    85.0
 5252  138  0   0.993     0.0     0.0     0.0     0.0    -9.9     0.0
 S.CRUZ---138  -164.0     0.0     0.0     0.0     0.0     0.0     0.0
                                                21.0%                 5235 C.GRANDE-138  1   -22.3    -9.3    24.4
                                                21.0%                 5235 C.GRANDE-138  2   -22.3    -9.3    24.4
                                                54.0%                 5253 S.CRUZ---069  1    24.1    -0.5    24.3 0.982*
                                                19.2%                 5262 C.NOVOS--138  1    20.5     9.3    22.7
 5253   69  0   1.014     0.0     0.0    18.7     0.0     0.0     0.0
 S.CRUZ---069  -167.2     0.0     0.0    -3.0     0.0     0.0     0.0
                                                53.0%                 5252 S.CRUZ---138  1   -24.1     1.9    23.9
```

```
                                                  0.1%                 5256 STD-TIP.-013  1     5.4     1.1     5.4 1.000F
 5254  230  0   1.038     0.0     0.0     0.0     0.0     0.0     0.0
 PARAISO--230  -161.1     0.0     0.0     0.0     0.0     0.0     0.0
                                                 20.3%                 5222 C.GRANDE-230  1   -64.5    11.2    63.1
                                                 17.3%                 5241 NATAL-II-230  1    54.9   -12.3    54.2
                                                  3.1%                 5461 ACU-II---230  1     9.6     1.1     9.3
 5256   14  0   1.003     0.0     0.0     5.4     0.0     0.0     0.0
 STD-TIP.-013  -171.1     0.0     0.0     0.7     0.0     0.0     0.0
                                                  0.1%                 5253 S.CRUZ---069  1    -5.4    -0.7     5.4
CEPEL - CENTRO DE PESQUISAS DE ENERGIA ELETRICA - PROGRAMA DE ANALISE DE REDES - V08MAR05A                              PAG. 458

ANUAL 06/07 * SETEMBRO 2006 PESADA S/SE 19H N/NE 19H * ANAT0 - FSE - C13
RELATORIO COMPLETO DO SISTEMA * AREA 55 * *        CHESF (AREA LESTE)        *

X----------------- D A D O S  -  B A R R A -------------------------X------------ F L U X O S  -  C I R C U I T O S ------------X
 DA BARRA      TENSAO GERACAO INJ EQV  CARGA   ELO CC  SHUNT    MOTOR
 NUM. KV TIPO   MOD/     MW/     MW/     MW/     MW/   Mvar/     MW/
     NOME       ANG     Mvar    Mvar    Mvar    Mvar   EQUIV    Mvar  PARA BARRA                    FLUXOS
                                                FLUXO % SHUNT L         NUM.     NOME     NC     MW    Mvar  MVA/V_d   TAP  DEFAS TIE
X------------X-------X-------X-------X-------X-------X-------X-------X----X------------X--X-------X-------X-------X------X-----X---X

 5262  138  0   0.968     0.0     0.0     0.0     0.0     0.0     0.0
 C.NOVOS--138  -165.5     0.0     0.0     0.0     0.0     0.0     0.0
                                                 20.5%                 5252 S.CRUZ---138  1   -20.3   -11.8    24.2
                                                 85.2%                 5268 CRD------000  1    29.0    11.8    32.4 0.920F
                                                  7.8%                 5474 S.MATOS--138  1    -8.8     0.0     9.0
 5263   69  0   1.014     0.0     0.0    29.0     0.0     0.0     0.0
 C.NOVOS--069  -174.0     0.0     0.0     7.0     0.0     0.0     0.0
                                                  0.0%                 5266 CRD-TIP.-013  1     0.0     0.0     0.0 0.975F
                                                  0.0%                 5266 CRD-TIP.-013  2     0.0     0.0     0.0 0.975F
                                                  0.0%                 5266 CRD-TIP.-013  3     0.0     0.0     0.0 0.975F
                                                 89.2%                 5268 CRD------000  1   -29.0    -7.0    29.4 1.012*
 5265   14  0   1.009     0.0     0.0     0.0     0.0     0.0     0.0
 C.NOVOS--013  -172.4     0.0     0.0     0.0     0.0     0.0     0.0
                                                  0.0%                 5268 CRD------000  1     0.0     0.0     0.0
 5266   14  0   1.040     0.0     0.0     0.0     0.0     0.0     0.0
 CRD-TIP.-013  -174.0     0.0     0.0     0.0     0.0     0.0     0.0
                                                  0.0%                 5263 C.NOVOS--069  1     0.0     0.0     0.0
                                                  0.0%                 5263 C.NOVOS--069  2     0.0     0.0     0.0
                                                  0.0%                 5263 C.NOVOS--069  3     0.0     0.0     0.0
 5268    1  0   1.009     0.0     0.0     0.0     0.0     0.0     0.0
 CRD------000  -172.4     0.0     0.0     0.0     0.0     0.0     0.0
                                                 78.4%                 5262 C.NOVOS--138  1   -29.0    -7.9    29.8
                                                 90.2%                 5263 C.NOVOS--069  1    29.0     7.9    29.8
                                                  0.0%                 5265 C.NOVOS--013  1     0.0     0.0     0.0 1.000F
 5281  230  0   1.015     0.0     0.0     0.0     0.0     0.0     0.0
 RIBEIRAO-230  -150.7     0.0     0.0     0.0     0.0     0.0     0.0
                                                 30.3%                 5101 ANGELIM--230  1   -80.8    -4.3    79.7
                                                  8.0%                 5141 RCD-BP-1-230  1   -11.6   -18.1    21.1
                                                 47.7%                 5283 RIBEIRAO-069  1    47.1    11.4    47.7 1.003*
                                                 45.9%                 5283 RIBEIRAO-069  2    45.3    11.0    45.9 1.003*
 5283   69  0   1.000     0.0     0.0    92.4     0.0     0.0     0.0
 RIBEIRAO-069  -154.0     0.0     0.0    16.7     0.0     0.0     0.0
                                                 47.9%                 5281 RIBEIRAO-230  1   -47.1    -8.5    47.9
                                                 46.0%                 5281 RIBEIRAO-230  2   -45.3    -8.2    46.0
 5291  230  0   0.977     0.0     0.0     0.0     0.0     0.0     0.0
 PENEDO---230  -153.3     0.0     0.0     0.0     0.0     0.0     0.0
                                                 29.9%                 5111 R.LARGO--230  1   -87.5   -24.1    92.9
                                                 45.4%                 5293 PENEDO---069  1    42.8    11.8    45.4 0.964*
                                                 47.4%                 5293 PENEDO---069  2    44.7    12.3    47.4 0.964*
```

ANUAL 06/07 * SETEMBRO 2006 PESADA S/SE 19H N/NE 19H * ANAT0 - FSE - C13
RELATORIO COMPLETO DO SISTEMA * AREA 55 * * CHESF (AREA LESTE) *

```
X----------------- D A D O S  -  B A R R A ------------------------X------------ F L U X O S  -  C I R C U I T O S ------------X
 DA BARRA      TENSAO GERACAO INJ EQV  CARGA   ELO CC  SHUNT    MOTOR
 NUM. KV TIPO   MOD/     MW/     MW/     MW/     MW/   Mvar/     MW/
     NOME       ANG     Mvar    Mvar    Mvar    Mvar   EQUIV    Mvar  PARA BARRA                    FLUXOS
                                                FLUXO % SHUNT L         NUM.     NOME     NC     MW    Mvar  MVA/V_d   TAP  DEFAS TIE
X------------X-------X-------X-------X-------X-------X-------X-------X----X------------X--X-------X-------X-------X------X-----X---X

 5293   69  0   1.000     0.0     0.0    87.5     0.0     0.0     0.0
 PENEDO---069  -156.5     0.0     0.0    19.0     0.0     0.0     0.0
                                            43.8%                    5291 PENEDO---230  1   -42.8    -9.3    43.8
                                            45.7%                    5291 PENEDO---230  2   -44.7    -9.7    45.7
 5300  500  0   1.023     0.0     0.0     0.0     0.0     0.0     0.0
 MESSIAS--500  -145.2     0.0     0.0     0.0     0.0     0.0     0.0                                -157.0 SHL
                                            25.5%  -157.0            5060 XINGO----500  1  -713.3     6.9   697.3              51
                                            18.4%                    5140 RECIFEII-500  1   237.8  -173.2   287.6
                                            41.0%                    5301 MESSIAS--230  1   237.7    83.2   246.1
                                            41.1%                    5301 MESSIAS--230  2   237.9    83.2   246.3
 5301  230  0   1.025     0.0     0.0     0.0     0.0     0.0     0.0
 MESSIAS--230  -146.8     0.0     0.0     0.0     0.0     0.0     0.0
                                            11.8%                    5101 ANGELIM--230  1   -32.5    -7.5    32.5
                                            11.8%                    5101 ANGELIM--230  2   -32.5    -7.5    32.5
                                            10.0%                    5101 ANGELIM--230  3   -31.0    -7.5    31.1
                                            38.0%                    5111 R.LARGO--230  1   118.8    25.7   118.6
                                            44.3%                    5111 R.LARGO--230  2   122.1    25.8   121.7
                                            44.7%                    5111 R.LARGO--230  3   122.1    25.8   121.7
                                            40.5%                    5300 MESSIAS--500  1  -237.7   -75.5   243.3 1.012*
                                            40.6%                    5300 MESSIAS--500  2  -237.9   -75.6   243.5 1.012*
                                            23.4%                    5311 MACEIO---230  1   104.3    48.1   112.0
                                            23.4%                    5311 MACEIO---230  2   104.3    48.1   112.0
 5311  230  0   1.015     0.0     0.0     0.0     0.0     0.0     0.0
 MACEIO---230  -147.7     0.0     0.0     0.0     0.0     0.0     0.0
                                            24.0%                    5301 MESSIAS--230  1  -104.0   -52.1   114.6
                                            24.0%                    5301 MESSIAS--230  2  -104.0   -52.1   114.6
                                            75.4%                    5313 MACEIO---069  1    68.4    34.3    75.4 0.976*
                                            75.5%                    5313 MACEIO---069  2    68.5    34.3    75.5 0.976*
                                            78.3%                    5313 MACEIO---069  3    71.1    35.6    78.3 0.976*
 5313   69  0   1.000     0.0     0.0   208.0     0.0     0.0     0.0
 MACEIO---069  -152.7     0.0     0.0    82.2     0.0     0.0     0.0
                                            73.6%                    5311 MACEIO---230  1   -68.4   -27.0    73.6
                                            73.6%                    5311 MACEIO---230  2   -68.5   -27.1    73.6
                                            76.4%                    5311 MACEIO---230  3   -71.1   -28.1    76.4
```



ANUAL 06/07 * SETEMBRO 2006 PESADA S/SE 19H N/NE 19H * ANAT0 - FSE - C13
RELATORIO COMPLETO DO SISTEMA * AREA 55 * * CHESF (AREA LESTE) *

```
X----------------- D A D O S  -  B A R R A ------------------------X------------ F L U X O S  -  C I R C U I T O S ------------X
 DA BARRA      TENSAO GERACAO INJ EQV  CARGA   ELO CC  SHUNT    MOTOR
 NUM. KV TIPO   MOD/     MW/     MW/     MW/     MW/   Mvar/     MW/
     NOME       ANG     Mvar    Mvar    Mvar    Mvar   EQUIV    Mvar  PARA BARRA                    FLUXOS
                                                FLUXO % SHUNT L         NUM.     NOME     NC     MW    Mvar  MVA/V_d   TAP  DEFAS TIE
X------------X-------X-------X-------X-------X-------X-------X-------X----X------------X--X-------X-------X-------X------X-----X---X

 5331  230  0   1.021     0.0     0.0     0.0     0.0     0.0     0.0
 JOAIRAM--230  -150.8     0.0     0.0     0.0     0.0     0.0     0.0
```

```
                                                 40.2%                 5141 RCD-BP-1-230  1  -125.1   -24.8   124.9
                                                 40.2%                 5141 RCD-BP-1-230  2  -125.1   -24.8   124.9
                                                 28.8%                 5142 RCD-BP-2-230  1  -135.9   -35.8   137.7
                                                 30.5%                 5152 BONGI----230  1    94.9    18.7    94.8
                                                 30.5%                 5152 BONGI----230  2    94.9    18.7    94.8
                                                 24.0%                 5152 BONGI----230  3    74.4    16.0    74.6
                                                 41.1%                 5333 JOAIRAM--069  1    60.9    16.0    61.7 1.008*
                                                 41.1%                 5333 JOAIRAM--069  2    60.9    16.0    61.7 1.008*
 5333   69  0   1.000     0.0     0.0   121.8     0.0     0.0     0.0
 JOAIRAM--069  -153.8     0.0     0.0    25.4     0.0     0.0     0.0
                                                 41.5%                 5331 JOAIRAM--230  1   -60.9   -12.7    62.2
                                                 41.5%                 5331 JOAIRAM--230  2   -60.9   -12.7    62.2
 5461  230  0   1.019     0.0     0.0     0.0     0.0     0.0     0.0
 ACU-II---230  -161.6     0.0     0.0     0.0     0.0     0.0     0.0
                                                  9.0%                 5254 PARAISO--230  1    -9.5   -25.8    27.0
                                                 36.9%                 5441 MOSSORO--230  1   -89.6     6.0    88.2                56
                                                 26.9%                 5463 ACU-II---069  1    10.7     0.1    10.5 0.989*
                                                 28.9%                 5463 ACU-II---069  2    11.5     0.1    11.3 0.989*
                                                 29.9%                 5463 ACU-II---069  3    15.2     0.1    15.0 0.989*
                                                 84.7%                 5468 ACU-II---138  1    29.1    37.4    46.6 1.000F
                                                 36.6%                 5468 ACU-II---138  2    32.6   -17.9    36.6 1.061*
 5463   69  0   1.030     0.0     0.0    37.4     0.0     0.0     0.0
 ACU-II---069  -163.8     0.0     0.0    -1.1     0.0     0.0     0.0
                                                 26.6%                 5461 ACU-II---230  1   -10.7     0.3    10.4
                                                 28.6%                 5461 ACU-II---230  2   -11.5     0.3    11.1
                                                 29.6%                 5461 ACU-II---230  3   -15.2     0.4    14.8
                                                  0.0%                 5464 ACU--T5--013  1     0.0     0.0     0.0 1.000F
                                                  0.0%                 5465 ACU--T4--013  1     0.0     0.0     0.0 1.000F
 5464   14  0   1.030     0.0     0.0     0.0     0.0     0.0     0.0
 ACU--T5--013  -163.8     0.0     0.0     0.0     0.0     0.0     0.0
                                                  0.0%                 5463 ACU-II---069  1     0.0     0.0     0.0
 5465   14  0   1.030     0.0     0.0     0.0     0.0     0.0     0.0
 ACU--T4--013  -163.8     0.0     0.0     0.0     0.0     0.0     0.0
                                                  0.0%                 5463 ACU-II---069  1     0.0     0.0     0.0
 5468  138  0   0.978     0.0     0.0    43.5     0.0     0.0     0.0
 ACU-II---138  -163.5     0.0     0.0    15.8     0.0     0.0     0.0
                                                 84.7%                 5461 ACU-II---230  1   -29.1   -35.0    46.6
                                                 38.8%                 5461 ACU-II---230  2   -32.6    19.3    38.8
                                                 15.8%                 5474 S.MATOS--138  1    18.3    -0.1    18.7
CEPEL - CENTRO DE PESQUISAS DE ENERGIA ELETRICA - PROGRAMA DE ANALISE DE REDES - V08MAR05A                              PAG. 461

ANUAL 06/07 * SETEMBRO 2006 PESADA S/SE 19H N/NE 19H * ANAT0 - FSE - C13
RELATORIO COMPLETO DO SISTEMA * AREA 55 * *        CHESF (AREA LESTE)        *

X----------------- D A D O S  -  B A R R A -------------------------X------------ F L U X O S  -  C I R C U I T O S ------------X
 DA BARRA      TENSAO GERACAO INJ EQV  CARGA   ELO CC  SHUNT    MOTOR
 NUM. KV TIPO   MOD/     MW/     MW/     MW/     MW/   Mvar/     MW/
     NOME        ANG     Mvar    Mvar    Mvar    Mvar   EQUIV    Mvar  PARA BARRA                   FLUXOS
                                                FLUXO % SHUNT L         NUM.     NOME     NC     MW    Mvar  MVA/V_d   TAP  DEFAS TIE
X------------X-------X-------X-------X-------X-------X-------X-------X----X------------X--X-------X-------X-------X------X-----X---X

 5474  138  0   0.969     0.0     0.0     0.0     0.0     0.0     0.0
 S.MATOS--138  -164.9     0.0     0.0     0.0     0.0     0.0     0.0
                                                  8.0%                 5262 C.NOVOS--138  1     8.8    -2.2     9.3
                                                 16.0%                 5468 ACU-II---138  1   -18.1    -2.4    18.9
                                                 71.4%                 5478 S.MATOS--000  1     9.3     4.5    10.7
 5475   69  0   0.993     0.0     0.0     7.4     0.0     0.0     0.0
 S.MATOS--069  -176.9     0.0     0.0     1.3     0.0     0.0     0.0
                                                 76.0%                 5478 S.MATOS--000  1    -7.4    -1.3     7.6 1.100S
 5476   14  0   0.918     0.0     0.0     1.9     0.0     0.0     0.0
```

```
 S.MATOS--013  -172.7     0.0     0.0     1.2     0.0     0.0     0.0
                                                48.9%                 5478 S.MATOS--000  1    -1.9    -1.2     2.4
 5478    1  0   0.917     0.0     0.0     0.0     0.0     0.0     0.0
 S.MATOS--000  -172.8     0.0     0.0     0.0     0.0     0.0     0.0
                                                71.4%                 5474 S.MATOS--138  1    -9.3    -3.0    10.7
                                                83.6%                 5475 S.MATOS--069  1     7.4     1.8     8.4
                                                48.9%                 5476 S.MATOS--013  1     1.9     1.2     2.4


TOTAIS DA AREA 55


X--------X--------X--------X--------X--------X--------X--------X--------X
  GERACAO  INJ EQV   CARGA   ELO CC    SHUNT   EXPORT   IMPORT   PERDAS
    MW/      MW/      MW/     MW/     Mvar/     MW/      MW/      MW/
   Mvar     Mvar     Mvar    Mvar     EQUIV    Mvar     Mvar     Mvar
X--------X--------X--------X--------X--------X--------X--------X--------X

    372.6      0.0   2845.9      0.0    118.5    200.6   2758.4     84.5
     81.1      0.0    744.3      0.0      0.0    462.7      0.0  -1007.4
```



```
X----------------- D A D O S  -  B A R R A ------------------------X------------ F L U X O S  -  C I R C U I T O S ------------X
 DA BARRA      TENSAO GERACAO INJ EQV  CARGA   ELO CC  SHUNT    MOTOR
 NUM. KV TIPO   MOD/     MW/     MW/     MW/     MW/   Mvar/     MW/
     NOME       ANG     Mvar    Mvar    Mvar    Mvar   EQUIV    Mvar  PARA BARRA                    FLUXOS
                                                FLUXO % SHUNT L         NUM.     NOME     NC     MW    Mvar  MVA/V_d   TAP  DEFAS TIE
X------------X-------X-------X-------X-------X-------X-------X-------X----X------------X--X-------X-------X-------X------X-----X---X

 5401  230  0   1.029     0.0     0.0     0.0     0.0     0.0     0.0
 B.NOME---230  -141.0     0.0     0.0     0.0     0.0     0.0     0.0
                                                14.5%                 5003 PAF-BP-1-230  1   -44.6    12.6    45.0              51
                                                16.1%                 5003 PAF-BP-1-230  2   -74.8    25.5    76.8              51
                                                15.9%                 5004 PAF-BP-2-230  1   -74.8    22.7    75.9              51
                                                27.3%                 5402 B.NOME---138  1    27.8     4.1    27.3 1.032*
                                                25.2%                 5402 B.NOME---138  2    25.7     3.7    25.2 1.032*
                                                87.3%                 5403 B.NOME---069  1    31.8    14.8    34.1 0.960*
                                                87.1%                 5403 B.NOME---069  2    31.7    14.8    34.0 0.960*
                                                 8.6%                 5411 MILAGRES-230  1    17.7   -20.9    26.6
                                                 9.9%                 5411 MILAGRES-230  2    29.7   -38.6    47.3
                                                 9.9%                 5411 MILAGRES-230  3    29.7   -38.6    47.3
 5402  138  0   0.993     0.0     0.0    53.5     0.0     0.0     0.0
 B.NOME---138  -142.5     0.0     0.0     6.4     0.0     0.0     0.0
                                                28.2%                 5401 B.NOME---230  1   -27.8    -3.3    28.2
                                                26.0%                 5401 B.NOME---230  2   -25.7    -3.1    26.0
 5403   69  0   1.029     0.0     0.0    57.3     0.0     0.0     0.0
 B.NOME---069  -146.7     0.0     0.0    20.4     0.0     0.0     0.0
                                                83.8%                 5401 B.NOME---230  1   -31.8   -11.1    32.7
                                                83.6%                 5401 B.NOME---230  2   -31.7   -11.1    32.6
                                                65.2%                 5406 BNO-TIP.-013  1     3.2     0.9     3.3 0.975F
                                                58.7%                 5406 BNO-TIP.-013  2     2.9     0.8     2.9 0.975F
 5406   14  0   1.045     0.0     0.0     6.1     0.0     0.0     0.0
 BNO-TIP.-013  -148.8     0.0     0.0     1.5     0.0     0.0     0.0
                                                63.5%                 5403 B.NOME---069  1    -3.2    -0.8     3.2
                                                57.2%                 5403 B.NOME---069  2    -2.9    -0.7     2.9
 5408  500  0   1.081     0.0     0.0     0.0     0.0  -116.8     0.0
```

```
 MILAGRES-500  -139.8     0.0     0.0     0.0     0.0     0.0     0.0                                  -291.9 SHL
                                                27.6%  -116.8         5050 L.GONZAG-500  1  -386.7   -21.3   358.4                51
                                                52.1%                 5411 MILAGRES-230  1   337.0    26.3   312.8
                                                 9.4%  -175.2         5428 QUIXADA  500  1    49.7  -121.7   121.7
 5409   14  0   1.029     0.0     0.0     0.0     0.0     0.0     0.0
 MLG--T3--013  -145.4     0.0     0.0     0.0     0.0     0.0     0.0
                                                 0.0%                 5412 MLG-RLT3-013  1     0.0     0.0     0.0
 5410    1  0   0.971     0.0     0.0     0.0     0.0     0.0     0.0
 CE MLG        -141.9   -42.5     0.0     0.0     0.0     0.0     0.0
                                                43.8%                 5411 MILAGRES-230  1     0.0   -42.5    43.8
CEPEL - CENTRO DE PESQUISAS DE ENERGIA ELETRICA - PROGRAMA DE ANALISE DE REDES - V08MAR05A                                  PAG. 463

ANUAL 06/07 * SETEMBRO 2006 PESADA S/SE 19H N/NE 19H * ANAT0 - FSE - C13
RELATORIO COMPLETO DO SISTEMA * AREA 56 * *        CHESF (AREA NORTE)        *

X----------------- D A D O S  -  B A R R A ------------------------X------------ F L U X O S  -  C I R C U I T O S ------------X
 DA BARRA      TENSAO GERACAO INJ EQV  CARGA   ELO CC  SHUNT    MOTOR
 NUM. KV TIPO   MOD/     MW/     MW/     MW/     MW/   Mvar/     MW/
     NOME       ANG     Mvar    Mvar    Mvar    Mvar   EQUIV    Mvar  PARA BARRA                    FLUXOS
                                                FLUXO % SHUNT L        NUM.     NOME     NC     MW    Mvar  MVA/V_d   TAP  DEFAS TIE
X------------X-------X-------X-------X-------X-------X-------X-------X----X------------X--X-------X-------X-------X------X-----X---X

 5411  230  0   1.037     0.0     0.0     0.0     0.0     0.0     0.0
 MILAGRES-230  -141.9     0.0     0.0     0.0     0.0     0.0     0.0                                   -32.3 SHL
                                                 7.6%   -10.8         5401 B.NOME---230  1   -17.6    16.6    23.4
                                                 7.4%   -10.8         5401 B.NOME---230  2   -29.6    22.0    35.6
                                                 7.4%   -10.8         5401 B.NOME---230  3   -29.6    22.0    35.6
                                                54.2%                 5408 MILAGRES-500  1  -337.0   -13.8   325.2 0.962*
                                                43.8%                 5410 CE MLG        1     0.0    45.4    43.8 1.000F
                                                47.1%                 5418 MLG--T3--000  1    47.5    11.2    47.1 0.995*
                                                47.0%                 5419 MLG--T4--000  1    47.4    11.2    47.0 0.995*
                                                18.2%                 5421 BANABUIU-230  1    44.8   -30.0    52.0
                                                24.7%                 5421 BANABUIU-230  2    63.9   -47.4    76.7
                                                18.8%                 5621 COREMAS--230  1    56.0     0.1    54.0
                                                18.8%                 5621 COREMAS--230  2    56.0     0.1    54.0
                                                32.6%                 5631 ICO------230  1    98.0   -37.6   101.3
 5412   14  0   1.029     0.0     0.0     0.0     0.0     0.0     0.0
 MLG-RLT3-013  -145.4     0.0     0.0     0.0     0.0     0.0     0.0
                                                 0.0%                 5409 MLG--T3--013  1     0.0     0.0     0.0 1.000F
                                                 0.0%                 5418 MLG--T3--000  1     0.0     0.0     0.0
 5413   69  0   1.029     0.0     0.0    87.8     0.0     0.0     0.0
 MILAGRES-069  -145.3     0.0     0.0    12.5     0.0     0.0     0.0
                                                42.0%                 5417 MILAGRES-013  1     1.9     1.1     2.1 1.000F
                                                30.9%                 5417 MILAGRES-013  2     3.3     1.9     3.7 1.000F
                                                43.8%                 5417 MILAGRES-013  3     1.9     1.1     2.2 1.000F
                                                46.8%                 5418 MLG--T3--000  1   -47.5    -8.3    46.8
                                                46.8%                 5419 MLG--T4--000  1   -47.4    -8.3    46.8
 5414   14  0   1.029     0.0     0.0     0.0     0.0     0.0     0.0
 MLG-RLT4-013  -145.4     0.0     0.0     0.0     0.0     0.0     0.0
                                                 0.0%                 5415 MLG--T4--013  1     0.0     0.0     0.0 1.000F
                                                 0.0%                 5419 MLG--T4--000  1     0.0     0.0     0.0
 5415   14  0   1.029     0.0     0.0     0.0     0.0     0.0     0.0
 MLG--T4--013  -145.4     0.0     0.0     0.0     0.0     0.0     0.0
                                                 0.0%                 5414 MLG-RLT4-013  1     0.0     0.0     0.0
 5416   14  0   1.000     0.0     0.0     7.1     0.0     0.0     0.0
 MLG-TIP.-013  -146.8     0.0     0.0     3.9     0.0     0.0     0.0
                                                 0.1%                 5417 MILAGRES-013  1    -7.1    -3.9     8.1 0.987*
 5417   14  0   1.015     0.0     0.0     0.0     0.0     0.0     0.0
 MILAGRES-013  -146.7     0.0     0.0     0.0     0.0     0.0     0.0
                                                42.0%                 5413 MILAGRES-069  1    -1.9    -1.0     2.1
```

```
                                                  30.9%                 5413 MILAGRES-069  2    -3.3    -1.8     3.7
                                                  43.8%                 5413 MILAGRES-069  3    -1.9    -1.1     2.2
                                                   0.1%                 5416 MLG-TIP.-013  1     7.1     3.9     8.0
CEPEL - CENTRO DE PESQUISAS DE ENERGIA ELETRICA - PROGRAMA DE ANALISE DE REDES - V08MAR05A                                PAG. 464

ANUAL 06/07 * SETEMBRO 2006 PESADA S/SE 19H N/NE 19H * ANAT0 - FSE - C13
RELATORIO COMPLETO DO SISTEMA * AREA 56 * *        CHESF (AREA NORTE)        *

X----------------- D A D O S  -  B A R R A -------------------------X------------ F L U X O S  -  C I R C U I T O S ------------X
 DA BARRA      TENSAO GERACAO INJ EQV  CARGA   ELO CC  SHUNT    MOTOR
 NUM. KV TIPO   MOD/     MW/     MW/     MW/     MW/   Mvar/     MW/
     NOME       ANG     Mvar    Mvar    Mvar    Mvar   EQUIV    Mvar  PARA BARRA                    FLUXOS
                                                FLUXO % SHUNT L        NUM.     NOME     NC     MW    Mvar  MVA/V_d   TAP  DEFAS TIE
X------------X-------X-------X-------X-------X-------X-------X-------X----X------------X--X-------X-------X-------X------X-----X---X

 5418    1  0   1.029     0.0     0.0     0.0     0.0     0.0     0.0
 MLG--T3--000  -145.4     0.0     0.0     0.0     0.0     0.0     0.0
                                                  46.8%                 5411 MILAGRES-230  1   -47.5    -8.2    46.8
                                                   0.0%                 5412 MLG-RLT3-013  1     0.0     0.0     0.0 1.000F
                                                  46.8%                 5413 MILAGRES-069  1    47.5     8.2    46.8 1.000F
 5419    1  0   1.029     0.0     0.0     0.0     0.0     0.0     0.0
 MLG--T4--000  -145.4     0.0     0.0     0.0     0.0     0.0     0.0
                                                  46.8%                 5411 MILAGRES-230  1   -47.4    -8.2    46.8
                                                  46.8%                 5413 MILAGRES-069  1    47.4     8.2    46.8 1.000F
                                                   0.0%                 5414 MLG-RLT4-013  1     0.0     0.0     0.0 1.000F
 5421  230  0   1.044     0.0     0.0     0.0     0.0     0.0     0.0
 BANABUIU-230  -147.3     0.0     0.0     0.0     0.0     0.0     0.0                                   -32.7 SHL
                                                  14.8%   -10.9         5411 MILAGRES-230  1   -44.0     3.7    42.3
                                                  19.3%   -10.9         5411 MILAGRES-230  2   -62.5     3.2    59.9
                                                   0.0%                 5422 LIBRA----013  1     0.3     0.3     0.4 1.000F
                                                  81.1%                 5423 BANABUIU-069  1    16.9    22.3    26.8
                                                  80.6%                 5423 BANABUIU-069  2    16.8    22.1    26.6
                                                  77.1%                 5423 BANABUIU-069  3    22.7   -33.3    38.6 1.117S
                                                  46.2%                 5431 RUSSAS---230  1   132.5    -4.9   127.0
                                                  36.8%                 5441 MOSSORO--230  1   119.3   -17.0   115.5
                                                  13.7%                 5452 FORTALEZ-230  1   -44.0    -3.0    42.3
                                                  18.7%                 5452 FORTALEZ-230  2   -62.3    -1.1    59.7
                                                  18.7%                 5452 FORTALEZ-230  3   -62.4    -1.0    59.7
                                                  10.5%   -10.9         5631 ICO------230  1   -33.4     8.6    33.0
 5422   14  0   1.043     0.0     0.0     0.3     0.0     0.0     0.0
 LIBRA----013  -147.3     0.0     0.0     0.3     0.0     0.0     0.0
                                                   0.0%                 5421 BANABUIU-230  1    -0.3    -0.3     0.4
 5423   69  0   1.029     0.0     0.0    55.2     0.0     0.0     0.0
 BANABUIU-069  -150.8     0.0     0.0     0.0     0.0     0.0     0.0
                                                  76.3%                 5421 BANABUIU-230  1   -16.9   -19.6    25.2 1.063*
                                                  75.8%                 5421 BANABUIU-230  2   -16.8   -19.5    25.0 1.063*
                                                  86.2%                 5421 BANABUIU-230  3   -22.7    38.1    43.1
                                                   1.7%                 5424 BNB--RS--013  1     0.5     0.4     0.7 1.000F
                                                   2.2%                 5424 BNB--RS--013  2     0.7     0.6     0.9 1.000F
 5424   14  0   1.014     0.0     0.0     0.0     0.0     0.0     0.0
 BNB--RS--013  -151.8     0.0     0.0     0.0     0.0     0.0     0.0
                                                   1.7%                 5423 BANABUIU-069  1    -0.5    -0.4     0.7
                                                   2.2%                 5423 BANABUIU-069  2    -0.7    -0.6     0.9
                                                  77.0%                 5426 BNB-TIP.-013  1     1.2     1.0     1.5 1.014*
 5426   14  0   1.000     0.0     0.0     1.2     0.0     0.0     0.0
 BNB-TIP.-013  -151.8     0.0     0.0     1.0     0.0     0.0     0.0
                                                  78.1%                 5424 BNB--RS--013  1    -1.2    -1.0     1.6
CEPEL - CENTRO DE PESQUISAS DE ENERGIA ELETRICA - PROGRAMA DE ANALISE DE REDES - V08MAR05A                                PAG. 465

ANUAL 06/07 * SETEMBRO 2006 PESADA S/SE 19H N/NE 19H * ANAT0 - FSE - C13
```

```
RELATORIO COMPLETO DO SISTEMA * AREA 56 * *        CHESF (AREA NORTE)        *

X----------------- D A D O S  -  B A R R A -------------------------X------------ F L U X O S  -  C I R C U I T O S ------------X
 DA BARRA      TENSAO GERACAO INJ EQV  CARGA   ELO CC  SHUNT    MOTOR
 NUM. KV TIPO   MOD/     MW/     MW/     MW/     MW/   Mvar/     MW/
     NOME       ANG     Mvar    Mvar    Mvar    Mvar   EQUIV    Mvar  PARA BARRA                    FLUXOS
                                                FLUXO % SHUNT L         NUM.     NOME     NC     MW    Mvar  MVA/V_d   TAP  DEFAS TIE
X------------X-------X-------X-------X-------X-------X-------X-------X----X------------X--X-------X-------X-------X------X-----X---X

 5428  500  0   1.097     0.0     0.0     0.0     0.0     0.0     0.0
 QUIXADA  500  -140.6     0.0     0.0     0.0     0.0     0.0     0.0                                   -180.5 SHL
                                                3.5%  -180.5         5408 MILAGRES-500  1   -49.5     6.0    45.5
                                                3.5%                 5451 FTZ-II---500  1    49.5    -6.0    45.5
 5431  230  0   1.022     0.0     0.0     0.0     0.0     0.0     0.0
 RUSSAS---230  -154.9     0.0     0.0     0.0     0.0     0.0     0.0
                                               46.0%                 5421 BANABUIU-230  1  -129.2     2.4   126.5
                                               28.4%                 5433 RUSSAS---069  1    27.3     9.9    28.4 0.982*
                                               27.1%                 5433 RUSSAS---069  2    26.0     9.5    27.1 0.982*
                                               24.3%                 5441 MOSSORO--230  1    75.9   -21.8    77.3
 5433   69  0   1.029     0.0     0.0    53.3     0.0     0.0     0.0
 RUSSAS---069  -156.7     0.0     0.0    17.5     0.0     0.0     0.0
                                               27.9%                 5431 RUSSAS---230  1   -27.3    -9.0    27.9
                                               26.6%                 5431 RUSSAS---230  2   -26.0    -8.6    26.6
 5441  230  0   1.024     0.0     0.0     0.0     0.0     0.0     0.0
 MOSSORO--230  -158.1     0.0     0.0     0.0     0.0     0.0     0.0
                                               35.8%                 5421 BANABUIU-230  1  -115.1     4.9   112.5
                                               23.4%                 5431 RUSSAS---230  1   -75.1    12.7    74.4
                                               48.6%                 5443 MOSSORO--069  1    49.7    -2.2    48.6 1.000F
                                               48.7%                 5443 MOSSORO--069  2    49.8    -2.3    48.7 1.000F
                                               37.4%                 5461 ACU-II---230  1    90.7   -13.1    89.5              55
 5443   69  1   1.029     0.0     0.0    99.5     0.0     0.0     0.0
 MOSSORO--069  -161.6    17.9     0.0     7.3     0.0     0.0     0.0
                                               48.6%                 5441 MOSSORO--230  1   -49.7     5.3    48.6
                                               48.7%                 5441 MOSSORO--230  2   -49.8     5.3    48.7
                                                0.0%                 5445 MOSSORO1-013  1     0.0     0.0     0.0 1.030F
                                                0.0%                 5446 MOSSORO2-013  1     0.0     0.0     0.0 1.030F
 5445   14  0   0.999     0.0     0.0     0.0     0.0     0.0     0.0
 MOSSORO1-013  -161.6     0.0     0.0     0.0     0.0     0.0     0.0
                                                0.0%                 5443 MOSSORO--069  1     0.0     0.0     0.0
 5446   14  0   0.999     0.0     0.0     0.0     0.0     0.0     0.0
 MOSSORO2-013  -161.6     0.0     0.0     0.0     0.0     0.0     0.0
                                                0.0%                 5443 MOSSORO--069  1     0.0     0.0     0.0
 5450    1  0   0.953     0.0     0.0     0.0     0.0     0.0     0.0
 CE FTZ        -143.0  -113.1     0.0     0.0     0.0     0.0     0.0
                                                1.2%                 5452 FORTALEZ-230  1     0.0  -113.1   118.7
CEPEL - CENTRO DE PESQUISAS DE ENERGIA ELETRICA - PROGRAMA DE ANALISE DE REDES - V08MAR05A                                PAG. 466

ANUAL 06/07 * SETEMBRO 2006 PESADA S/SE 19H N/NE 19H * ANAT0 - FSE - C13
RELATORIO COMPLETO DO SISTEMA * AREA 56 * *        CHESF (AREA NORTE)        *

X----------------- D A D O S  -  B A R R A -------------------------X------------ F L U X O S  -  C I R C U I T O S ------------X
 DA BARRA      TENSAO GERACAO INJ EQV  CARGA   ELO CC  SHUNT    MOTOR
 NUM. KV TIPO   MOD/     MW/     MW/     MW/     MW/   Mvar/     MW/
     NOME       ANG     Mvar    Mvar    Mvar    Mvar   EQUIV    Mvar  PARA BARRA                    FLUXOS
                                                FLUXO % SHUNT L         NUM.     NOME     NC     MW    Mvar  MVA/V_d   TAP  DEFAS TIE
X------------X-------X-------X-------X-------X-------X-------X-------X----X------------X--X-------X-------X-------X------X-----X---X

 5451  500  0   1.080     0.0     0.0     0.0     0.0     0.0     0.0
 FTZ-II---500  -140.9     0.0     0.0     0.0     0.0     0.0     0.0                                   -524.9 SHL
                                                5.4%  -175.0         5428 QUIXADA  500  1   -49.4   -57.5    70.2
```

```
                                                  53.1%                 5458 FTZ-II---230  1   339.9    54.3   318.7
                                                  53.1%                 5458 FTZ-II---230  2   339.9    54.3   318.7
                                                   8.6%  -175.0         5480 SOBRALIII500  1  -310.1   -27.9   288.3                57
                                                   8.8%  -175.0         5480 SOBRALIII500  2  -320.4   -23.2   297.4                57
 5452  230  0   1.038     0.0     0.0     0.0     0.0     0.0     0.0
 FORTALEZ-230  -143.0     0.0     0.0     0.0     0.0     0.0     0.0                                   -43.1 SHL
                                                  14.8%   -10.8         5421 BANABUIU-230  1    44.7   -15.8    45.7
                                                  22.9%                 5421 BANABUIU-230  2    63.5   -41.3    73.0
                                                  21.3%   -10.8         5421 BANABUIU-230  3    63.5   -30.6    67.9
                                                   1.2%                 5450 CE FTZ        1     0.0   123.2   118.7 1.000F
                                                  72.1%                 5453 FORTALEZ-069  1    74.2     9.6    72.1 1.001*
                                                  74.2%                 5453 FORTALEZ-069  2    76.3     9.9    74.2 1.001*
                                                  73.7%                 5453 FORTALEZ-069  3    75.9     9.8    73.7 1.001*
                                                  73.8%                 5453 FORTALEZ-069  4    76.0     9.8    73.8 1.001*
                                                  32.8%   -10.8         5458 FTZ-II---230  1  -158.0   -21.3   153.6
                                                  33.1%                 5458 FTZ-II---230  2  -158.0   -32.0   155.4
                                                  32.8%   -10.8         5458 FTZ-II---230  3  -158.0   -21.3   153.6
 5453   69  0   1.029     0.0     0.0   332.8     0.0    64.8     0.0
 FORTALEZ-069  -148.3     0.0     0.0    67.4     0.0     0.0     0.0
                                                  72.2%                 5452 FORTALEZ-230  1   -74.2    -2.7    72.2
                                                  74.2%                 5452 FORTALEZ-230  2   -76.3    -2.8    74.2
                                                  73.8%                 5452 FORTALEZ-230  3   -75.9    -2.7    73.8
                                                  73.9%                 5452 FORTALEZ-230  4   -76.0    -2.7    73.9
                                                   0.0%                 5454 FTZ-RLT3-013  1     0.0     0.0     0.0 1.000F
                                                   0.0%                 5456 FTZ-RLT4-013  1     0.0     0.0     0.0 1.000F
                                                  20.4%                 5473 D.GOUVEI-069  1   -16.0     4.4    16.1
                                                  18.4%                 5473 D.GOUVEI-069  2   -14.4     3.9    14.5
 5454   14  0   1.029     0.0     0.0     0.0     0.0     0.0     0.0
 FTZ-RLT3-013  -148.3     0.0     0.0     0.0     0.0     0.0     0.0
                                                   0.0%                 5453 FORTALEZ-069  1     0.0     0.0     0.0
                                                   0.0%                 5455 FTZ-1-T3-013  1     0.0     0.0     0.0 1.000F
 5455   14  0   1.029     0.0     0.0     0.0     0.0     0.0     0.0
 FTZ-1-T3-013  -148.3     0.0     0.0     0.0     0.0     0.0     0.0
                                                   0.0%                 5454 FTZ-RLT3-013  1     0.0     0.0     0.0
 5456   14  0   1.029     0.0     0.0     0.0     0.0     0.0     0.0
 FTZ-RLT4-013  -148.3     0.0     0.0     0.0     0.0     0.0     0.0
                                                   0.0%                 5453 FORTALEZ-069  1     0.0     0.0     0.0
                                                   0.0%                 5457 FTZ-2-T4-013  1     0.0     0.0     0.0 1.000F
CEPEL - CENTRO DE PESQUISAS DE ENERGIA ELETRICA - PROGRAMA DE ANALISE DE REDES - V08MAR05A                                PAG. 467

ANUAL 06/07 * SETEMBRO 2006 PESADA S/SE 19H N/NE 19H * ANAT0 - FSE - C13
RELATORIO COMPLETO DO SISTEMA * AREA 56 * *        CHESF (AREA NORTE)        *

X----------------- D A D O S  -  B A R R A ------------------------X------------ F L U X O S  -  C I R C U I T O S ------------X
 DA BARRA      TENSAO GERACAO INJ EQV  CARGA   ELO CC  SHUNT    MOTOR
 NUM. KV TIPO   MOD/     MW/     MW/     MW/     MW/   Mvar/     MW/
     NOME       ANG     Mvar    Mvar    Mvar    Mvar   EQUIV    Mvar  PARA BARRA                    FLUXOS
                                                FLUXO % SHUNT L         NUM.     NOME     NC     MW    Mvar  MVA/V_d   TAP  DEFAS TIE
X------------X-------X-------X-------X-------X-------X-------X-------X----X------------X--X-------X-------X-------X------X-----X---X

 5457   14  0   1.029     0.0     0.0     0.0     0.0     0.0     0.0
 FTZ-2-T4-013  -148.3     0.0     0.0     0.0     0.0     0.0     0.0
                                                   0.0%                 5456 FTZ-RLT4-013  1     0.0     0.0     0.0
 5458  230  0   1.038     0.0     0.0     0.0     0.0     0.0     0.0
 FTZ-II---230  -143.0     0.0     0.0     0.0     0.0     0.0     0.0
                                                  55.0%                 5451 FTZ-II---500  1  -339.9   -41.4   329.9 0.966*
                                                  55.0%                 5451 FTZ-II---500  2  -339.9   -41.4   329.9 0.966*
                                                  33.1%                 5452 FORTALEZ-230  1   158.0    32.0   155.4
                                                  33.1%                 5452 FORTALEZ-230  2   158.0    32.0   155.4
                                                  33.1%                 5452 FORTALEZ-230  3   158.0    32.0   155.4
```

```
                                                  33.0%                 5471 D.GOUVEI-230  1   131.6   -35.3   131.3
                                                  33.0%                 5471 D.GOUVEI-230  2   131.6   -35.3   131.3
                                                  20.1%                 5641 PICI 230      1    82.5    20.4    81.9
                                                  20.1%                 5641 PICI 230      2    82.5    20.4    81.9
                                                  19.8%                 5651 CAUIPE---230  1   -82.3     4.9    79.4
                                                  19.8%                 5651 CAUIPE---230  2   -82.3     4.9    79.4
                                                  23.6%                 5651 CAUIPE---230  3   -58.0     6.7    56.3
 5471  230  0   1.039     0.0     0.0     0.0     0.0    54.5     0.0
 D.GOUVEI-230  -143.4     0.0     0.0     0.0     0.0     0.0     0.0
                                                  32.9%                 5458 FTZ-II---230  1  -131.5    34.2   130.8
                                                  32.9%                 5458 FTZ-II---230  2  -131.5    34.2   130.8
                                                  63.8%                 5473 D.GOUVEI-069  1    66.2    -3.5    63.8 1.017*
                                                  63.7%                 5473 D.GOUVEI-069  2    66.1    -3.5    63.7 1.017*
                                                  63.9%                 5473 D.GOUVEI-069  3    66.3    -3.5    63.9 1.017*
                                                  62.1%                 5473 D.GOUVEI-069  4    64.5    -3.4    62.1 1.017*
 5473   69  0   1.029     0.0     0.0   232.6     0.0   102.9     0.0
 D.GOUVEI-069  -147.9     0.0     0.0    76.4     0.0     0.0     0.0
                                                  20.4%                 5453 FORTALEZ-069  1    16.0    -4.4    16.1
                                                  18.4%                 5453 FORTALEZ-069  2    14.4    -3.9    14.5
                                                  64.9%                 5471 D.GOUVEI-230  1   -66.2     8.8    64.9
                                                  64.7%                 5471 D.GOUVEI-230  2   -66.1     8.7    64.7
                                                  65.0%                 5471 D.GOUVEI-230  3   -66.3     8.8    65.0
                                                  63.2%                 5471 D.GOUVEI-230  4   -64.5     8.5    63.2
 5621  230  0   1.015     0.0     0.0     0.0     0.0     0.0     0.0
 COREMAS--230  -145.3     0.0     0.0     0.0     0.0     0.0     0.0
                                                  20.0%                 5411 MILAGRES-230  1   -55.4   -17.9    57.3
                                                  20.0%                 5411 MILAGRES-230  2   -55.4   -17.9    57.3
                                                  57.5%                 5623 COREMAS-I069  1    55.5    17.9    57.5 0.954*
                                                  57.2%                 5623 COREMAS-I069  2    55.2    17.8    57.2 0.954*
CEPEL - CENTRO DE PESQUISAS DE ENERGIA ELETRICA - PROGRAMA DE ANALISE DE REDES - V08MAR05A                          PAG. 468

ANUAL 06/07 * SETEMBRO 2006 PESADA S/SE 19H N/NE 19H * ANAT0 - FSE - C13
RELATORIO COMPLETO DO SISTEMA * AREA 56 * *        CHESF (AREA NORTE)        *

X----------------- D A D O S  -  B A R R A ------------------------X------------ F L U X O S  -  C I R C U I T O S ------------X
 DA BARRA      TENSAO GERACAO INJ EQV  CARGA   ELO CC  SHUNT    MOTOR
 NUM. KV TIPO   MOD/     MW/     MW/     MW/     MW/   Mvar/     MW/
     NOME       ANG     Mvar    Mvar    Mvar    Mvar   EQUIV    Mvar  PARA BARRA                    FLUXOS
                                                FLUXO % SHUNT L         NUM.     NOME     NC     MW    Mvar  MVA/V_d   TAP  DEFAS TIE
X------------X-------X-------X-------X-------X-------X-------X-------X----X------------X--X-------X-------X-------X------X-----X---X

 5623   69  0   1.043     0.0     0.0   110.7     0.0     0.0     0.0
 COREMAS-I069  -149.1     0.0     0.0    28.0     0.0     0.0     0.0
                                                  54.9%                 5621 COREMAS--230  1   -55.5   -14.1    54.9
                                                  54.6%                 5621 COREMAS--230  2   -55.2   -14.0    54.6
                                                   0.0%                 5624 COREMAS--013  1     0.0     0.0     0.0
 5624   14  0   1.043     0.0     0.0     0.0     0.0     0.0     0.0
 COREMAS--013  -149.1     0.0     0.0     0.0     0.0     0.0     0.0
                                                   0.0%                 5623 COREMAS-I069  1     0.0     0.0     0.0
 5631  230  0   1.039     0.0     0.0     0.0     0.0     0.0     0.0
 ICO------230  -145.7     0.0     0.0     0.0     0.0     0.0     0.0
                                                  30.3%                 5411 MILAGRES-230  1   -96.4    16.7    94.2
                                                  13.8%                 5421 BANABUIU-230  1    33.6   -30.0    43.3
                                                  61.8%                 5633 ICO------069  1    62.8    13.3    61.8 1.011*
 5633   69  0   1.015     0.0     0.0    62.8     0.0     0.0     0.0
 ICO------069  -150.1     0.0     0.0     8.3     0.0     0.0     0.0
                                                  62.5%                 5631 ICO------230  1   -62.8    -8.3    62.5
 5641  230  0   1.031     0.0     0.0     0.0     0.0     0.0     0.0
 PICI 230      -143.8     0.0     0.0     0.0     0.0     0.0     0.0
                                                  20.5%                 5458 FTZ-II---230  1   -82.2   -25.9    83.7
```

```
                                                  20.5%                 5458 FTZ-II---230  2   -82.2   -25.9    83.7
                                                  83.5%                 5643 PICI  69      1    82.1    25.9    83.5 1.002*
                                                  83.9%                 5643 PICI  69      2    82.4    26.0    83.9 1.002*
 5643   69  0   1.001     0.0     0.0   164.5     0.0     0.0     0.0
 PICI  69      -149.9     0.0     0.0    33.3     0.0     0.0     0.0
                                                  83.6%                 5641 PICI 230      1   -82.1   -16.6    83.6
                                                  84.0%                 5641 PICI 230      2   -82.4   -16.7    84.0
 5651  230  0   1.038     0.0     0.0     0.0     0.0     0.0     0.0
 CAUIPE---230  -141.3     0.0     0.0     0.0     0.0     0.0     0.0
                                                  20.4%                 5458 FTZ-II---230  1    82.6   -17.9    81.4
                                                  20.4%                 5458 FTZ-II---230  2    82.6   -17.9    81.4
                                                  24.3%                 5458 FTZ-II---230  3    58.4   -15.1    58.1
                                                   8.5%                 5481 SOBRALII-230  1   -20.2    -6.4    20.4                57
                                                  29.1%                 5652 UTE_FORT.230  1  -129.5    26.6   127.4
                                                  29.1%                 5652 UTE_FORT.230  2  -129.5    26.6   127.4
                                                  53.7%                 5653 CAUIPE---069  1    55.6     4.0    53.7 1.035*
                                                   0.0%                 5664 UTE_CEARAMQ5  1     0.0     0.0     0.0
                                                   0.0%                 5667 UCE-MQ12-000  1     0.0     0.0     0.0 1.000F
                                                   0.0%                 5668 UCE-MQ34-000  1     0.0     0.0     0.0 1.000F
CEPEL - CENTRO DE PESQUISAS DE ENERGIA ELETRICA - PROGRAMA DE ANALISE DE REDES - V08MAR05A                              PAG. 469

ANUAL 06/07 * SETEMBRO 2006 PESADA S/SE 19H N/NE 19H * ANAT0 - FSE - C13
RELATORIO COMPLETO DO SISTEMA * AREA 56 * *        CHESF (AREA NORTE)        *

X----------------- D A D O S  -  B A R R A ------------------------X------------ F L U X O S  -  C I R C U I T O S ------------X
 DA BARRA      TENSAO GERACAO INJ EQV  CARGA   ELO CC  SHUNT    MOTOR
 NUM. KV TIPO   MOD/     MW/     MW/     MW/     MW/   Mvar/     MW/
     NOME       ANG     Mvar    Mvar    Mvar    Mvar   EQUIV    Mvar  PARA BARRA                    FLUXOS
                                                FLUXO % SHUNT L         NUM.     NOME     NC     MW    Mvar  MVA/V_d   TAP  DEFAS TIE
X------------X-------X-------X-------X-------X-------X-------X-------X----X------------X--X-------X-------X-------X------X-----X---X

 5652  230  0   1.038     0.0     0.0     0.0     0.0     0.0     0.0
 UTE_FORT.230  -141.2     0.0     0.0     0.0     0.0     0.0     0.0
                                                  29.1%                 5651 CAUIPE---230  1   129.5   -26.7   127.5
                                                  29.1%                 5651 CAUIPE---230  2   129.5   -26.7   127.5
                                                   1.8%                 5654 TERMFTZG-2GR  1  -180.0    36.4   177.0 1.025F
                                                   0.0%                 5655 TERMFTZV-000  1     0.0     0.0     0.0 1.025F
                                                   0.8%                 5656 UTE_FORTAMQ3  1   -79.1    17.0    78.0 1.025F
 5653   69  0   1.000     0.0     0.0    55.6     0.0     0.0     0.0
 CAUIPE---069  -145.4     0.0     0.0     0.0     0.0     0.0     0.0
                                                  55.6%                 5651 CAUIPE---230  1   -55.6     0.0    55.6
 5654    1  1   1.000   180.0     0.0     0.0     0.0     0.0     0.0
 TERMFTZG-2GR  -136.8   -22.3     0.0     0.0     0.0     0.0     0.0
                                                   1.8%                 5652 UTE_FORT.230  1   180.0   -22.3   181.4
 5655    1 -1   1.013     0.0     0.0     0.0     0.0     0.0     0.0
 TERMFTZV-000  -141.2     0.0     0.0     0.0     0.0     0.0     0.0
                                                   0.0%                 5652 UTE_FORT.230  1     0.0     0.0     0.0
 5656    1  1   1.000    79.1     0.0     0.0     0.0     0.0     0.0
 UTE_FORTAMQ3  -137.1   -11.3     0.0     0.0     0.0     0.0     0.0
                                                   0.8%                 5652 UTE_FORT.230  1    79.1   -11.3    79.9
 5660    1 -1   1.038     0.0     0.0     0.0     0.0     0.0     0.0
 TERMOCEG-000  -141.3     0.0     0.0     0.0     0.0     0.0     0.0
                                                   0.0%                 5667 UCE-MQ12-000  1     0.0     0.0     0.0
 5661    1  0   1.038     0.0     0.0     0.0     0.0     0.0     0.0
 UTE_CEARAMQ2  -141.3     0.0     0.0     0.0     0.0     0.0     0.0
                                                   0.0%                 5667 UCE-MQ12-000  1     0.0     0.0     0.0
 5662    1  0   1.038     0.0     0.0     0.0     0.0     0.0     0.0
 UTE_CEARAMQ3  -141.3     0.0     0.0     0.0     0.0     0.0     0.0
                                                   0.0%                 5668 UCE-MQ34-000  1     0.0     0.0     0.0
 5663    1  0   1.038     0.0     0.0     0.0     0.0     0.0     0.0
```

```
 UTE_CEARAMQ4  -141.3     0.0     0.0     0.0     0.0     0.0     0.0
                                                0.0%                 5668 UCE-MQ34-000  1     0.0     0.0     0.0
 5664    1  0   1.038     0.0     0.0     0.0     0.0     0.0     0.0
 UTE_CEARAMQ5  -141.3     0.0     0.0     0.0     0.0     0.0     0.0
                                                0.0%                 5651 CAUIPE---230  1     0.0     0.0     0.0 1.000F
CEPEL - CENTRO DE PESQUISAS DE ENERGIA ELETRICA - PROGRAMA DE ANALISE DE REDES - V08MAR05A                                PAG. 470

ANUAL 06/07 * SETEMBRO 2006 PESADA S/SE 19H N/NE 19H * ANAT0 - FSE - C13
RELATORIO COMPLETO DO SISTEMA * AREA 56 * *        CHESF (AREA NORTE)        *

X----------------- D A D O S  -  B A R R A -------------------------X------------ F L U X O S  -  C I R C U I T O S ------------X
 DA BARRA      TENSAO GERACAO INJ EQV  CARGA   ELO CC  SHUNT    MOTOR
 NUM. KV TIPO   MOD/     MW/     MW/     MW/     MW/   Mvar/     MW/
     NOME       ANG     Mvar    Mvar    Mvar    Mvar   EQUIV    Mvar  PARA BARRA                    FLUXOS
                                                FLUXO % SHUNT L         NUM.     NOME     NC     MW    Mvar  MVA/V_d   TAP  DEFAS TIE
X------------X-------X-------X-------X-------X-------X-------X-------X----X------------X--X-------X-------X-------X------X-----X---X

 5667    1  0   1.038     0.0     0.0     0.0     0.0     0.0     0.0
 UCE-MQ12-000  -141.3     0.0     0.0     0.0     0.0     0.0     0.0
                                                0.0%                 5651 CAUIPE---230  1     0.0     0.0     0.0
                                                0.0%                 5660 TERMOCEG-000  1     0.0     0.0     0.0
                                                0.0%                 5661 UTE_CEARAMQ2  1     0.0     0.0     0.0
 5668    1  0   1.038     0.0     0.0     0.0     0.0     0.0     0.0
 UCE-MQ34-000  -141.3     0.0     0.0     0.0     0.0     0.0     0.0
                                                0.0%                 5651 CAUIPE---230  1     0.0     0.0     0.0
                                                0.0%                 5662 UTE_CEARAMQ3  1     0.0     0.0     0.0
                                                0.0%                 5663 UTE_CEARAMQ4  1     0.0     0.0     0.0


TOTAIS DA AREA 56


X--------X--------X--------X--------X--------X--------X--------X--------X
  GERACAO  INJ EQV   CARGA   ELO CC    SHUNT   EXPORT   IMPORT   PERDAS
    MW/      MW/      MW/      MW/     Mvar/     MW/      MW/      MW/
   Mvar     Mvar     Mvar     Mvar     EQUIV    Mvar     Mvar     Mvar
X--------X--------X--------X--------X--------X--------X--------X--------X

    259.1      0.0   1380.5      0.0    105.5     89.6   1235.9     24.8
   -171.4      0.0    284.3      0.0      0.0    182.1     84.8   -447.6
CEPEL - CENTRO DE PESQUISAS DE ENERGIA ELETRICA - PROGRAMA DE ANALISE DE REDES - V08MAR05A                                PAG. 471

ANUAL 06/07 * SETEMBRO 2006 PESADA S/SE 19H N/NE 19H * ANAT0 - FSE - C13
RELATORIO COMPLETO DO SISTEMA * AREA 57 * *        CHESF (AREA OESTE)        *

X----------------- D A D O S  -  B A R R A -------------------------X------------ F L U X O S  -  C I R C U I T O S ------------X
 DA BARRA      TENSAO GERACAO INJ EQV  CARGA   ELO CC  SHUNT    MOTOR
 NUM. KV TIPO   MOD/     MW/     MW/     MW/     MW/   Mvar/     MW/
     NOME       ANG     Mvar    Mvar    Mvar    Mvar   EQUIV    Mvar  PARA BARRA                    FLUXOS
                                                FLUXO % SHUNT L         NUM.     NOME     NC     MW    Mvar  MVA/V_d   TAP  DEFAS TIE
X------------X-------X-------X-------X-------X-------X-------X-------X----X------------X--X-------X-------X-------X------X-----X---X

 5480  500  0   1.087     0.0     0.0     0.0     0.0     0.0     0.0
 SOBRALIII500  -137.4     0.0     0.0     0.0     0.0     0.0     0.0                                -699.9 SHL
                                                8.5%  -172.6         5451 FTZ-II---500  1   311.3    -3.7   286.3                56
                                                8.8%  -177.3         5451 FTZ-II---500  2   321.6     7.1   295.8                56
                                               32.2%                  5488 SOBRALIII230  1   208.0    28.5   193.1
                                               12.5%  -172.6         5500 TERES-II-500  1  -413.9   -16.2   380.9
                                               12.9%  -177.3         5500 TERES-II-500  2  -427.0   -15.7   393.0
```

```
 5481  230  0   1.028     0.0     0.0     6.8     0.0     0.0     0.0
 SOBRALII-230  -139.2     0.0     0.0     2.9     0.0     0.0     0.0                                  -21.1 SHL
                                                 58.6%                 5482 SBD--T1--000  1    58.9    12.5    58.6 0.987*
                                                 55.0%                 5483 SOBRALII-069  3    55.3    11.8    55.0 0.987*
                                                 59.0%                 5484 SBD--T2--000  1    59.3    12.6    59.0 0.987*
                                                 13.3%                 5488 SOBRALIII230  1  -103.9   -14.7   102.1
                                                 13.3%                 5488 SOBRALIII230  2  -103.9   -14.7   102.1
                                                  3.4%   -10.6         5491 PIRIPIRI-230  1     7.2     4.5     8.2
                                                 10.2%   -10.6         5651 CAUIPE---230  1    20.3   -14.9    24.5                56
 5482    1  0   1.024     0.0     0.0     0.0     0.0     0.0     0.0
 SBD--T1--000  -145.2     0.0     0.0     0.0     0.0     0.0     0.0
                                                 57.8%                 5481 SOBRALII-230  1   -58.9    -6.2    57.8
                                                 57.8%                 5483 SOBRALII-069  1    58.9     6.2    57.8 1.000F
                                                  0.0%                 5485 SBD--T1--013  1     0.0     0.0     0.0 1.000F
 5483   69  0   1.029     0.0     0.0   173.5     0.0     0.0     0.0
 SOBRALII-069  -143.1     0.0     0.0    24.7     0.0     0.0     0.0
                                                 54.3%                 5481 SOBRALII-230  3   -55.3    -7.9    54.3
                                                 57.8%                 5482 SBD--T1--000  1   -58.9    -8.4    57.8
                                                 58.2%                 5484 SBD--T2--000  1   -59.3    -8.4    58.2
 5484    1  0   1.024     0.0     0.0     0.0     0.0     0.0     0.0
 SBD--T2--000  -145.2     0.0     0.0     0.0     0.0     0.0     0.0
                                                 58.2%                 5481 SOBRALII-230  1   -59.3    -6.2    58.2
                                                 58.2%                 5483 SOBRALII-069  1    59.3     6.2    58.2 1.000F
                                                  0.0%                 5487 SBD--T2--013  1     0.0     0.0     0.0 1.000F
 5485   14  0   1.024     0.0     0.0     0.0     0.0     0.0     0.0
 SBD--T1--013  -145.2     0.0     0.0     0.0     0.0     0.0     0.0
                                                  0.0%                 5482 SBD--T1--000  1     0.0     0.0     0.0
 5487   14  0   1.024     0.0     0.0     0.0     0.0     0.0     0.0
 SBD--T2--013  -145.2     0.0     0.0     0.0     0.0     0.0     0.0
                                                  0.0%                 5484 SBD--T2--000  1     0.0     0.0     0.0
CEPEL - CENTRO DE PESQUISAS DE ENERGIA ELETRICA - PROGRAMA DE ANALISE DE REDES - V08MAR05A                                PAG. 472

ANUAL 06/07 * SETEMBRO 2006 PESADA S/SE 19H N/NE 19H * ANAT0 - FSE - C13
RELATORIO COMPLETO DO SISTEMA * AREA 57 * *        CHESF (AREA OESTE)       *

X----------------- D A D O S  -  B A R R A -------------------------X------------ F L U X O S  -  C I R C U I T O S ------------X
 DA BARRA      TENSAO GERACAO INJ EQV  CARGA   ELO CC  SHUNT    MOTOR
 NUM. KV TIPO   MOD/     MW/     MW/     MW/     MW/   Mvar/     MW/
     NOME       ANG     Mvar    Mvar    Mvar    Mvar   EQUIV    Mvar  PARA BARRA                    FLUXOS
                                                FLUXO % SHUNT L         NUM.     NOME     NC     MW    Mvar  MVA/V_d   TAP  DEFAS TIE
X------------X-------X-------X-------X-------X-------X-------X-------X----X------------X--X-------X-------X-------X------X-----X---X

 5488  230  0   1.030     0.0     0.0     0.0     0.0     0.0     0.0
 SOBRALIII230  -138.7     0.0     0.0     0.0     0.0     0.0     0.0
                                                 33.9%                 5480 SOBRALIII500  1  -208.0   -23.7   203.2 0.950*
                                                 13.2%                 5481 SOBRALII-230  1   104.0    11.8   101.6
                                                 13.2%                 5481 SOBRALII-230  2   104.0    11.8   101.6
 5491  230  0   1.012     0.0     0.0     0.0     0.0     0.0     0.0
 PIRIPIRI-230  -139.7     0.0     0.0     0.0     0.0     0.0     0.0                                  -10.2 SHL
                                                 10.0%                 5481 SOBRALII-230  1    -7.1   -23.2    23.9
                                                 82.4%                 5492 PIRIPIRI-138  1    41.8    18.9    45.3 0.979*
                                                 53.1%                 5498 PRI--T2--000  1    17.5     3.2    17.5 0.975*
                                                 47.3%                 5499 PRI--T1--000  1    15.5     3.0    15.6 0.975*
                                                 21.6%   -10.2         5501 TERESINA-230  1   -67.6    -2.0    66.9
 5492  138  0   1.014     0.0     0.0    41.8     0.0     0.0     0.0
 PIRIPIRI-138  -142.2     0.0     0.0    16.7     0.0     0.0     0.0
                                                 80.7%                 5491 PIRIPIRI-230  1   -41.8   -16.7    44.4
 5493   69  0   1.030     0.0     0.0    24.5     0.0     0.0     0.0
 PIRIPIRI-069  -142.3     0.0     0.0     5.2     0.0     0.0     0.0
                                                 60.5%                 5496 PRI------013  1     2.8     1.3     3.0 1.000F
```

```
                                                   58.2%                 5496 PRI------013  2     2.7     1.3     2.9 1.000F
                                                   63.4%                 5496 PRI------013  3     2.9     1.4     3.2 1.000F
                                                   51.8%                 5498 PRI--T2--000  1   -17.5    -2.4    17.1
                                                   49.9%                 5499 PRI--T1--000  1   -15.5    -6.9    16.5
 5494   14  0   1.034     0.0     0.0     0.0     0.0     0.0     0.0
 PRI-RL-T1013  -142.4     0.0     0.0     0.0     0.0     0.0     0.0
                                                    0.0%                 5497 PRI--T1--013  1     0.0    -4.6     4.4 1.000F
                                                   40.0%                 5499 PRI--T1--000  1     0.0     4.6     4.4
 5495   14  0   1.030     0.0     0.0     0.0     0.0     0.0     0.0
 PRI--T2--013  -142.5     0.0     0.0     0.0     0.0     0.0     0.0
                                                    0.0%                 5498 PRI--T2--000  1     0.0     0.0     0.0
 5496   14  0   1.013     0.0     0.0     8.5     0.0     0.0     0.0
 PRI------013  -144.3     0.0     0.0     3.7     0.0     0.0     0.0
                                                   60.5%                 5493 PIRIPIRI-069  1    -2.8    -1.2     3.0
                                                   58.2%                 5493 PIRIPIRI-069  2    -2.7    -1.2     2.9
                                                   63.4%                 5493 PIRIPIRI-069  3    -2.9    -1.3     3.2
 5497   14  0   1.049     0.0     0.0     0.0     0.0     4.6     0.0
 PRI--T1--013  -142.4     0.0     0.0     0.0     0.0     0.0     0.0
                                                    0.0%                 5494 PRI-RL-T1013  1     0.0     4.6     4.4
CEPEL - CENTRO DE PESQUISAS DE ENERGIA ELETRICA - PROGRAMA DE ANALISE DE REDES - V08MAR05A                                PAG. 473

ANUAL 06/07 * SETEMBRO 2006 PESADA S/SE 19H N/NE 19H * ANAT0 - FSE - C13
RELATORIO COMPLETO DO SISTEMA * AREA 57 * *        CHESF (AREA OESTE)        *

X----------------- D A D O S  -  B A R R A ------------------------X------------ F L U X O S  -  C I R C U I T O S ------------X
 DA BARRA      TENSAO GERACAO INJ EQV  CARGA   ELO CC  SHUNT    MOTOR
 NUM. KV TIPO   MOD/     MW/     MW/     MW/     MW/   Mvar/     MW/
     NOME       ANG     Mvar    Mvar    Mvar    Mvar   EQUIV    Mvar  PARA BARRA                    FLUXOS
                                                FLUXO % SHUNT L         NUM.     NOME     NC     MW    Mvar  MVA/V_d   TAP  DEFAS TIE
X------------X-------X-------X-------X-------X-------X-------X-------X----X------------X--X-------X-------X-------X------X-----X---X

 5498    1  0   1.030     0.0     0.0     0.0     0.0     0.0     0.0
 PRI--T2--000  -142.5     0.0     0.0     0.0     0.0     0.0     0.0
                                                   51.8%                 5491 PIRIPIRI-230  1   -17.5    -2.3    17.1
                                                   51.8%                 5493 PIRIPIRI-069  1    17.5     2.3    17.1 1.000F
                                                    0.0%                 5495 PRI--T2--013  1     0.0     0.0     0.0 1.000F
 5499    1  0   1.029     0.0     0.0     0.0     0.0     0.0     0.0
 PRI--T1--000  -142.4     0.0     0.0     0.0     0.0     0.0     0.0
                                                   46.2%                 5491 PIRIPIRI-230  1   -15.5    -2.3    15.2
                                                   49.9%                 5493 PIRIPIRI-069  1    15.5     6.8    16.5
                                                   40.0%                 5494 PRI-RL-T1013  1     0.0    -4.5     4.4 1.000F
 5500  500  0   1.066     0.0     0.0     0.0     0.0  -111.5     0.0
 TERES-II-500  -129.9     0.0     0.0     0.0     0.0     0.0     0.0                                -896.2 SHL
                                                   13.0%  -332.1         5480 SOBRALIII500  1   418.9   -45.0   395.1
                                                   13.3%  -341.2         5480 SOBRALIII500  2   430.5   -21.0   404.1
                                                   44.6%                 5502 TERES-II-230  1   139.4    31.1   133.9
                                                   44.6%                 5502 TERES-II-230  2   139.4    31.1   133.9
                                                   40.5%  -111.5         5580 P.DUTRA--500  1  -557.7   -55.1   525.5                58
                                                   17.7%  -111.5         5580 P.DUTRA--500  2  -570.5   -52.6   537.2                58
 5501  230  0   1.034     0.0     0.0     0.0     0.0    54.0     0.0
 TERESINA-230  -134.1     0.0     0.0     0.0     0.0     0.0     0.0                                 -21.4 SHL
                                                   21.6%                 5491 PIRIPIRI-230  1    68.9    -8.3    67.1
                                                   42.9%                 5502 TERES-II-230  1  -138.6   -13.9   134.7
                                                   42.9%                 5502 TERES-II-230  2  -138.6   -13.9   134.7
                                                   89.0%                 5503 TERESINA-069  1    86.3    31.9    89.0 0.972*
                                                   85.5%                 5503 TERESINA-069  2    82.9    30.7    85.5 0.972*
                                                   88.9%                 5503 TERESINA-069  3    86.2    31.9    88.9 0.972*
                                                   72.5%                 5504 TSA--T1--000  1    24.1     5.6    23.9 1.001*
                                                   40.5%                 5507 TSA--T2--000  1    13.0    -4.7    13.4 1.044*
                                                    0.0%                 5508 TSA----R-013  1     0.0     0.0     0.0 1.037*
```

```
                                                 20.1%   -10.7         5511 B.ESPER.-230  1   -57.7     1.6    55.8
                                                 20.5%   -10.7         5511 B.ESPER.-230  2   -57.8     1.5    55.9
                                                 13.4%                 5527 C.NETO-T-TAP  1    31.1    -8.3    31.2                58
 5502  230  0   1.043     0.0     0.0     0.0     0.0     0.0     0.0
 TERES-II-230  -132.4     0.0     0.0     0.0     0.0     0.0     0.0
                                                 45.2%                 5500 TERES-II-500  1  -139.4   -24.8   135.7 0.987*
                                                 45.2%                 5500 TERES-II-500  2  -139.4   -24.8   135.7 0.987*
                                                 42.8%                 5501 TERESINA-230  1   139.4    13.4   134.2
                                                 42.8%                 5501 TERESINA-230  2   139.4    13.4   134.2
                                                 14.6%                 5509 TERESINA-1CS  1     0.0    22.9    21.9 1.000F
CEPEL - CENTRO DE PESQUISAS DE ENERGIA ELETRICA - PROGRAMA DE ANALISE DE REDES - V08MAR05A                                PAG. 474

ANUAL 06/07 * SETEMBRO 2006 PESADA S/SE 19H N/NE 19H * ANAT0 - FSE - C13
RELATORIO COMPLETO DO SISTEMA * AREA 57 * *        CHESF (AREA OESTE)        *

X----------------- D A D O S  -  B A R R A ------------------------X------------ F L U X O S  -  C I R C U I T O S ------------X
 DA BARRA      TENSAO GERACAO INJ EQV  CARGA   ELO CC  SHUNT    MOTOR
 NUM. KV TIPO   MOD/     MW/     MW/     MW/     MW/   Mvar/     MW/
     NOME       ANG     Mvar    Mvar    Mvar    Mvar   EQUIV    Mvar  PARA BARRA                    FLUXOS
                                              FLUXO % SHUNT L         NUM.     NOME     NC     MW    Mvar  MVA/V_d   TAP  DEFAS TIE
X------------X-------X-------X-------X-------X-------X-------X-------X----X------------X--X-------X-------X-------X------X-----X---X

 5503   69  0   1.030     0.0     0.0   255.4     0.0    45.2     0.0
 TERESINA-069  -139.9     0.0     0.0   111.0     0.0     0.0     0.0
                                                 86.5%                 5501 TERESINA-230  1   -86.3   -22.2    86.5
                                                 83.1%                 5501 TERESINA-230  2   -82.9   -21.4    83.1
                                                 86.4%                 5501 TERESINA-230  3   -86.2   -22.2    86.4
 5504    1  0   1.019     0.0     0.0     0.0     0.0     0.0     0.0
 TSA--T1--000  -138.3     0.0     0.0     0.0     0.0     0.0     0.0
                                                 72.5%                 5501 TERESINA-230  1   -24.1    -3.7    23.9
                                                 72.5%                 5505 TSA--T1--013  1    24.1     3.7    23.9 1.000F
 5505   14  0   1.014     0.0     0.0    24.1     0.0     7.4     0.0
 TSA--T1--013  -140.2     0.0     0.0    10.3     0.0     0.0     0.0
                                                 72.5%                 5504 TSA--T1--000  1   -24.1    -2.9    23.9
 5506   14  0   1.014     0.0     0.0    13.0     0.0    11.1     0.0
 TSA--T2--013  -137.5     0.0     0.0     5.5     0.0     0.0     0.0
                                                 42.3%                 5507 TSA--T2--000  1   -13.0     5.6    14.0
 5507    1  0   1.006     0.0     0.0     0.0     0.0     0.0     0.0
 TSA--T2--000  -136.4     0.0     0.0     0.0     0.0     0.0     0.0
                                                 42.3%                 5501 TERESINA-230  1   -13.0     5.3    14.0
                                                 42.3%                 5506 TSA--T2--013  1    13.0    -5.3    14.0 1.000F
 5508   14  0   0.997     0.0     0.0     0.0     0.0     0.0     0.0
 TSA----R-013  -134.1     0.0     0.0     0.0     0.0     0.0     0.0
                                                  0.0%                 5501 TERESINA-230  1     0.0     0.0     0.0
 5509    1  1   1.025     0.0     0.0     0.0     0.0     0.0     0.0
 TERESINA-1CS  -132.4   -22.5     0.0     0.0     0.0     0.0     0.0
                                                 14.6%                 5502 TERES-II-230  1     0.0   -22.5    21.9
 5510  500  0   1.075     0.0     0.0     0.0     0.0  -115.6     0.0
 B.ESPER.-500  -127.9     0.0     0.0     0.0     0.0     0.0     0.0                          -235.7 SHL
                                                  6.1%                 5511 B.ESPER.-230  1     9.7   -17.3    18.4
                                                 23.8%  -115.6         5574 BCSBEASJI500  1   316.8   -99.7   309.0
                                                 21.7%  -120.2         5580 P.DUTRA--500  1  -326.6     1.4   303.8                58
CEPEL - CENTRO DE PESQUISAS DE ENERGIA ELETRICA - PROGRAMA DE ANALISE DE REDES - V08MAR05A                                PAG. 475

ANUAL 06/07 * SETEMBRO 2006 PESADA S/SE 19H N/NE 19H * ANAT0 - FSE - C13
RELATORIO COMPLETO DO SISTEMA * AREA 57 * *        CHESF (AREA OESTE)        *

X----------------- D A D O S  -  B A R R A ------------------------X------------ F L U X O S  -  C I R C U I T O S ------------X
 DA BARRA      TENSAO GERACAO INJ EQV  CARGA   ELO CC  SHUNT    MOTOR
 NUM. KV TIPO   MOD/     MW/     MW/     MW/     MW/   Mvar/     MW/
```

```
     NOME       ANG     Mvar    Mvar    Mvar    Mvar   EQUIV    Mvar  PARA BARRA                    FLUXOS
                                               FLUXO % SHUNT L         NUM.     NOME     NC     MW    Mvar  MVA/V_d   TAP  DEFAS TIE
X------------X-------X-------X-------X-------X-------X-------X-------X----X------------X--X-------X-------X-------X------X-----X---X

 5511  230  0   1.043     0.0     0.0     0.0     0.0     0.0     0.0
 B.ESPER.-230  -128.0     0.0     0.0     0.0     0.0     0.0     0.0
                                              21.6%                 5501 TERESINA-230  1    58.8   -21.2    59.9
                                              22.0%                 5501 TERESINA-230  2    58.9   -21.5    60.1
                                               6.4%                 5510 B.ESPER.-500  1    -9.7    17.4    19.1 0.965*
                                              51.8%                 5512 UBE--T5--000  1    15.6    14.1    20.2 0.971*
                                              49.5%                 5514 UBE--T6--000  1    18.1     8.8    19.3 0.990*
                                              40.8%                 5518 UBE--T8--000  1    15.3     6.6    15.9 0.993*
                                              78.3%                 5520 BOAESP-1-2GR  1   -98.0    -3.4    94.0 1.000F
                                               0.0%                 5521 UBE-01G2-0MQ  1     0.0     0.0     0.0 1.000F
                                              80.8%                 5522 BOAESP-2-1GR  1   -59.0    -0.8    56.6 1.000F
                                               0.0%                 5523 BOAESP-2-000  1     0.0     0.0     0.0 1.000F
 5512    1  0   1.027     0.0     0.0     0.0     0.0     0.0     0.0
 UBE--T5--000  -131.0     0.0     0.0     0.0     0.0     0.0     0.0
                                              50.3%                 5511 B.ESPER.-230  1   -15.6   -12.7    19.6
                                              59.5%                 5513 B.ESPER--069  1    15.6    12.7    19.6 1.000F
                                               0.0%                 5515 UBE--T5--013  1     0.0     0.0     0.0 1.000F
 5513   69  0   1.030     0.0     0.0    48.1     0.0     0.0     0.0
 B.ESPER--069  -130.8     0.0     0.0    25.8     0.0     0.0     0.0
                                              59.5%                 5512 UBE--T5--000  1   -15.6   -12.8    19.6
                                              57.9%                 5514 UBE--T6--000  1   -18.1    -7.7    19.1
                                              19.2%                 5516 UBE--T6--013  1     0.9     0.4     1.0 1.000F
                                               0.2%                 5518 UBE--T8--000  1   -15.3    -5.7    15.8
 5514    1  0   1.028     0.0     0.0     0.0     0.0     0.0     0.0
 UBE--T6--000  -131.1     0.0     0.0     0.0     0.0     0.0     0.0
                                              49.0%                 5511 B.ESPER.-230  1   -18.1    -7.6    19.1
                                              57.9%                 5513 B.ESPER--069  1    18.1     7.6    19.1 1.000F
                                               0.0%                 5517 UBE------013  1     0.0     0.0     0.0 1.000F
 5515   14  0   1.027     0.0     0.0     0.0     0.0     0.0     0.0
 UBE--T5--013  -131.0     0.0     0.0     0.0     0.0     0.0     0.0
                                               0.0%                 5512 UBE--T5--000  1     0.0     0.0     0.0
 5516   14  0   1.025     0.0     0.0     0.9     0.0     0.0     0.0
 UBE--T6--013  -131.5     0.0     0.0     0.4     0.0     0.0     0.0
                                              19.2%                 5513 B.ESPER--069  1    -0.9    -0.4     1.0
 5517   14  0   1.028     0.0     0.0     0.0     0.0     0.0     0.0
 UBE------013  -131.1     0.0     0.0     0.0     0.0     0.0     0.0
                                               0.0%                 5514 UBE--T6--000  1     0.0     0.0     0.0
CEPEL - CENTRO DE PESQUISAS DE ENERGIA ELETRICA - PROGRAMA DE ANALISE DE REDES - V08MAR05A                                PAG. 476

ANUAL 06/07 * SETEMBRO 2006 PESADA S/SE 19H N/NE 19H * ANAT0 - FSE - C13
RELATORIO COMPLETO DO SISTEMA * AREA 57 * *        CHESF (AREA OESTE)        *

X----------------- D A D O S  -  B A R R A -------------------------X------------ F L U X O S  -  C I R C U I T O S ------------X
 DA BARRA      TENSAO GERACAO INJ EQV  CARGA   ELO CC  SHUNT    MOTOR
 NUM. KV TIPO   MOD/     MW/     MW/     MW/     MW/   Mvar/     MW/
     NOME       ANG     Mvar    Mvar    Mvar    Mvar   EQUIV    Mvar  PARA BARRA                    FLUXOS
                                               FLUXO % SHUNT L         NUM.     NOME     NC     MW    Mvar  MVA/V_d   TAP  DEFAS TIE
X------------X-------X-------X-------X-------X-------X-------X-------X----X------------X--X-------X-------X-------X------X-----X---X

 5518    1  0   1.029     0.0     0.0     0.0     0.0     0.0     0.0
 UBE--T8--000  -131.0     0.0     0.0     0.0     0.0     0.0     0.0
                                              40.5%                 5511 B.ESPER.-230  1   -15.3    -5.6    15.8
                                               0.2%                 5513 B.ESPER--069  1    15.3     5.6    15.8 1.000F
                                               0.0%                 5519 UBE--T8--013  1     0.0     0.0     0.0 1.000F
 5519   14  0   1.029     0.0     0.0     0.0     0.0     0.0     0.0
 UBE--T8--013  -131.0     0.0     0.0     0.0     0.0     0.0     0.0
```

```
                                                  0.0%                  5518 UBE--T8--000  1     0.0     0.0     0.0
 5520    1  1   1.050    98.0     0.0     0.0     0.0     0.0     0.0
 BOAESP-1-2GR  -123.1    11.8     0.0     0.0     0.0     0.0     0.0
                                                 78.3%                  5511 B.ESPER.-230  1    98.0    11.8    94.0
 5521    1 -1   1.043     0.0     0.0     0.0     0.0     0.0     0.0
 UBE-01G2-0MQ  -128.0     0.0     0.0     0.0     0.0     0.0     0.0
                                                  0.0%                  5511 B.ESPER.-230  1     0.0     0.0     0.0
 5522    1  1   1.050    59.0     0.0     0.0     0.0     0.0     0.0
 BOAESP-2-1GR  -122.1     6.9     0.0     0.0     0.0     0.0     0.0
                                                 80.8%                  5511 B.ESPER.-230  1    59.0     6.9    56.6
 5523    1 -1   1.043     0.0     0.0     0.0     0.0     0.0     0.0
 BOAESP-2-000  -128.0     0.0     0.0     0.0     0.0     0.0     0.0
                                                  0.0%                  5511 B.ESPER.-230  1     0.0     0.0     0.0
 5570  500  0   1.106     0.0     0.0     0.0     0.0     0.0     0.0
 S.J.PIAUI500  -129.4     0.0     0.0     0.0     0.0     0.0     0.0                              -244.7 SHL
                                                 29.1%                  5571 S.J.PIAUI230  1    95.5   -13.4    87.2
                                                 15.3%  -122.4          5572 BCSSJIUSB500  1   219.3    20.8   199.2
                                                 21.9%  -122.4          5574 BCSBEASJI500  1  -314.9    -7.4   284.7
 5571  230  0   1.041     0.0     0.0     0.0     0.0     0.0     0.0
 S.J.PIAUI230  -130.9     0.0     0.0     0.0     0.0     0.0     0.0
                                                 31.0%                  5570 S.J.PIAUI500  1   -95.5    16.0    93.1 0.937F
                                                 37.0%                  5573 S.J.PIAUI069  1    12.2     3.4    12.2 1.000F
                                                 17.4%                  5573 S.J.PIAUI069  2     6.0     0.1     5.8 1.010*
                                                 37.9%                  5671 PICOS----230  1    47.3    -0.2    45.5
                                                  0.3%                  5681 ELISEU-M-230  1    30.0   -19.3    34.3
 5572  500  0   1.090     0.0     0.0     0.0     0.0     0.0     0.0
 BCSSJIUSB500  -127.4     0.0     0.0     0.0     0.0     0.0     0.0
                                                 16.8%                  5570 S.J.PIAUI500  1  -219.3    92.6   218.5
                                                 16.8%                  6300 SOBRAD.--500  1   219.3   -92.6   218.5                51
CEPEL - CENTRO DE PESQUISAS DE ENERGIA ELETRICA - PROGRAMA DE ANALISE DE REDES - V08MAR05A                                  PAG. 477

ANUAL 06/07 * SETEMBRO 2006 PESADA S/SE 19H N/NE 19H * ANAT0 - FSE - C13
RELATORIO COMPLETO DO SISTEMA * AREA 57 * *        CHESF (AREA OESTE)        *

X----------------- D A D O S  -  B A R R A ------------------------X------------ F L U X O S  -  C I R C U I T O S ------------X
 DA BARRA      TENSAO GERACAO INJ EQV  CARGA   ELO CC  SHUNT    MOTOR
 NUM. KV TIPO   MOD/     MW/     MW/     MW/     MW/   Mvar/     MW/
     NOME       ANG     Mvar    Mvar    Mvar    Mvar   EQUIV    Mvar  PARA BARRA                    FLUXOS
                                                FLUXO % SHUNT L         NUM.     NOME     NC     MW    Mvar  MVA/V_d   TAP  DEFAS TIE
X------------X-------X-------X-------X-------X-------X-------X-------X----X------------X--X-------X-------X-------X------X-----X---X

 5573   69  0   1.031     0.0     0.0    18.2     0.0     0.0     0.0
 S.J.PIAUI069  -133.1     0.0     0.0     2.8     0.0     0.0     0.0
                                                 37.0%                  5571 S.J.PIAUI230  1   -12.2    -2.9    12.2
                                                 17.6%                  5571 S.J.PIAUI230  2    -6.0     0.1     5.8
 5574  500  0   1.083     0.0     0.0     0.0     0.0     0.0     0.0
 BCSBEASJI500  -132.5     0.0     0.0     0.0     0.0     0.0     0.0
                                                 23.7%                  5510 B.ESPER.-500  1  -314.9  -110.0   307.9
                                                 23.7%                  5570 S.J.PIAUI500  1   314.9   110.0   307.9
 5671  230  0   1.006     0.0     0.0     0.0     0.0     0.0     0.0
 PICOS----230  -134.9     0.0     0.0     0.0     0.0     0.0     0.0
                                                 44.1%                  5571 S.J.PIAUI230  1   -46.7   -25.7    52.9
                                                 91.8%                  5673 PICOS----069  1    26.8    14.4    30.3
                                                 68.6%                  5673 PICOS----069  2    19.8    11.2    22.6 0.960F
 5673   69  0   0.986     0.0     0.0    46.7     0.0     0.0     0.0
 PICOS----069  -142.0     0.0     0.0    18.5     0.0     0.0     0.0
                                                 88.5%                  5671 PICOS----230  1   -26.8   -10.4    29.2 1.038F
                                                 65.9%                  5671 PICOS----230  2   -19.8    -8.2    21.7
 5681  230  0   1.038     0.0     0.0     0.0     0.0     0.0     0.0
 ELISEU-M-230  -133.7     0.0     0.0     0.0     0.0     0.0     0.0
```

```
                                                 0.3%                 5571 S.J.PIAUI230  1   -29.7   -11.2    30.6
                                                30.6%                 5683 ELISEU-M--69  1    14.8     5.6    15.3 1.023*
                                                30.6%                 5683 ELISEU-M--69  2    14.8     5.6    15.3 1.023*
 5683   69  0   1.001     0.0     0.0    29.7     0.0     0.0     0.0
 ELISEU-M--69  -135.9     0.0     0.0     9.9     0.0     0.0     0.0
                                                31.3%                 5681 ELISEU-M-230  1   -14.8    -4.9    15.6
                                                31.3%                 5681 ELISEU-M-230  2   -14.8    -4.9    15.6


TOTAIS DA AREA 57


X--------X--------X--------X--------X--------X--------X--------X--------X
  GERACAO  INJ EQV   CARGA   ELO CC    SHUNT   EXPORT   IMPORT   PERDAS
    MW/      MW/      MW/     MW/     Mvar/     MW/      MW/      MW/
   Mvar     Mvar     Mvar    Mvar     EQUIV    Mvar     Mvar     Mvar
X--------X--------X--------X--------X--------X--------X--------X--------X

    157.0      0.0    691.2      0.0   -104.7    900.2   1456.6     22.3
     -3.8      0.0    237.5      0.0      0.0     57.6    185.7   -217.8
```





```
X----------------- D A D O S  -  B A R R A ------------------------X------------ F L U X O S  -  C I R C U I T O S ------------X
 DA BARRA      TENSAO GERACAO INJ EQV  CARGA   ELO CC  SHUNT    MOTOR
 NUM. KV TIPO   MOD/     MW/     MW/     MW/     MW/   Mvar/     MW/
     NOME       ANG     Mvar    Mvar    Mvar    Mvar   EQUIV    Mvar  PARA BARRA                    FLUXOS
                                                FLUXO % SHUNT L         NUM.     NOME     NC     MW    Mvar  MVA/V_d   TAP  DEFAS TIE
X------------X-------X-------X-------X-------X-------X-------X-------X----X------------X--X-------X-------X-------X------X-----X---X

 5524  230  0   1.016     0.0     0.0     0.0     0.0     0.0     0.0
 C.NETO-P-TAP  -136.2     0.0     0.0     0.0     0.0     0.0     0.0
                                                 6.6%                 5525 C.NETO---230  1    -2.9   -15.4    15.5
                                                 6.6%                 5528 SCHIN-MA 230  1     2.9    15.4    15.5
 5525  230  0   1.023     0.0     0.0     0.0     0.0     0.0     0.0
 C.NETO---230  -136.2     0.0     0.0     0.0     0.0     0.0     0.0
                                                 1.2%                 5524 C.NETO-P-TAP  1     2.9     0.3     2.9
                                                23.7%                 5526 C.NETO---069  1    14.0     7.3    15.4 1.007*
                                                23.7%                 5526 C.NETO---069  2    14.0     7.3    15.4 1.007*
                                                14.4%                 5527 C.NETO-T-TAP  1   -30.9   -14.8    33.5
 5526   69  0   1.000     0.0     0.0    28.0     0.0     0.0     0.0
 C.NETO---069  -137.9     0.0     0.0    13.5     0.0     0.0     0.0
                                                23.9%                 5525 C.NETO---230  1   -14.0    -6.8    15.5
                                                23.9%                 5525 C.NETO---230  2   -14.0    -6.8    15.5
 5527  230  0   1.033     0.0     0.0     0.0     0.0     0.0     0.0
 C.NETO-T-TAP  -134.9     0.0     0.0     0.0     0.0     0.0     0.0
                                                12.9%                 5501 TERESINA-230  1   -31.1    -0.1    30.1               57
                                                12.9%                 5525 C.NETO---230  1    31.1     0.1    30.1
 5528    1  0   1.013     0.0     0.0     4.3     0.0     0.0     0.0
 SCHIN-MA 230  -136.2     0.0     0.0     1.8     0.0     0.0     0.0
                                                 8.0%                 5524 C.NETO-P-TAP  1    -2.9   -18.6    18.6
                                                 7.2%                 5531 PERITORO-230  1    -1.4    16.8    16.7
 5531  230  0   0.981     0.0     0.0     4.0     0.0     0.0     0.0
 PERITORO-230  -135.8     0.0     0.0     1.3     0.0     0.0     0.0
                                                15.9%                 5528 SCHIN-MA 230  1     1.6   -36.4    37.1
                                                72.8%                 5538 PERITORO-000  1    62.6    34.4    72.8 0.918*
                                                29.8%                 5541 MIRANDA--230  1    67.9     4.7    69.4
```

```
                                                  58.0%                 5581 P.DUTRA--230  1  -136.0    -4.0   138.7
 5533   69  0   1.029     0.0     0.0    60.7     0.0     0.0     0.0
 PERITORO-069  -140.1     0.0     0.0    27.6     0.0     0.0     0.0
                                                  64.8%                 5538 PERITORO-000  1   -60.7   -27.6    64.8
 5535   14  0   1.026     0.0     0.0     1.9     0.0     0.0     0.0
 PERITORO-013  -140.6     0.0     0.0     0.8     0.0     0.0     0.0
                                                  20.0%                 5538 PERITORO-000  1    -1.9    -0.8     2.0
 5538    1  0   1.027     0.0     0.0     0.0     0.0     0.0     0.0
 PERITORO-000  -140.5     0.0     0.0     0.0     0.0     0.0     0.0
                                                  66.8%                 5531 PERITORO-230  1   -62.6   -28.1    66.8
                                                  64.8%                 5533 PERITORO-069  1    60.7    27.2    64.8
                                                  20.0%                 5535 PERITORO-013  1     1.9     0.8     2.0
CEPEL - CENTRO DE PESQUISAS DE ENERGIA ELETRICA - PROGRAMA DE ANALISE DE REDES - V08MAR05A                          PAG. 479

ANUAL 06/07 * SETEMBRO 2006 PESADA S/SE 19H N/NE 19H * ANAT0 - FSE - C13
RELATORIO COMPLETO DO SISTEMA * AREA 58 * *      ENORTE (AREA MARANHAO)      *

X----------------- D A D O S  -  B A R R A -------------------------X------------ F L U X O S  -  C I R C U I T O S ------------X
 DA BARRA      TENSAO GERACAO INJ EQV  CARGA   ELO CC  SHUNT    MOTOR
 NUM. KV TIPO   MOD/     MW/     MW/     MW/     MW/   Mvar/     MW/
     NOME       ANG     Mvar    Mvar    Mvar    Mvar   EQUIV    Mvar  PARA BARRA                    FLUXOS
                                                FLUXO % SHUNT L        NUM.     NOME     NC     MW    Mvar  MVA/V_d   TAP  DEFAS TIE
X------------X-------X-------X-------X-------X-------X-------X-------X----X------------X--X-------X-------X-------X------X-----X---X

 5541  230  0   0.959     0.0     0.0     0.0     0.0     0.0     0.0
 MIRANDA--230  -139.5     0.0     0.0     0.0     0.0     0.0     0.0
                                                  30.7%                 5531 PERITORO-230  1   -67.0   -15.1    71.6
                                                  27.6%                 5547 MIRANDA-2000  2    23.7    11.8    27.6 0.919*
                                                  26.8%                 5548 MIRANDA-1000  1    23.1    11.4    26.8 0.919*
                                                  96.3%                 5549 MIRANDA--000  1    81.2    44.0    96.3
                                                  35.9%                 5551 S.LUISII-230  1   -61.0   -52.2    83.7               61
 5542  138  0   1.018     0.0     0.0    81.2     0.0     0.0     0.0
 MIRANDA--138  -143.7     0.0     0.0    36.7     0.0     0.0     0.0
                                                  87.6%                 5549 MIRANDA--000  1   -81.2   -36.7    87.6 1.100S
 5543   69  0   1.029     0.0     0.0    42.6     0.0     0.0     0.0
 MIRANDA--069  -141.2     0.0     0.0    19.5     0.0     0.0     0.0
                                                  25.4%                 5547 MIRANDA-2000  2   -23.7   -10.9    25.4
                                                  20.1%                 5548 MIRANDA-1000  1   -18.9    -8.6    20.1
 5544    1  0   1.028     0.0     0.0     0.0     0.0     0.0     0.0
 MIRANDA13-2   -141.3     0.0     0.0     0.0     0.0     0.0     0.0
                                                   0.0%                 5547 MIRANDA-2000  1     0.0     0.0     0.0
 5545   14  0   1.027     0.0     0.0     4.2     0.0     0.0     0.0
 MIRANDA-1013  -141.5     0.0     0.0     2.0     0.0     0.0     0.0
                                                  15.1%                 5548 MIRANDA-1000  1    -4.2    -2.0     4.5
 5546   14  0   0.922     0.0     0.0     0.0     0.0     0.0     0.0
 MIRANDA-2013  -144.0     0.0     0.0     0.0     0.0     0.0     0.0
                                                   0.0%                 5549 MIRANDA--000  1     0.0     0.0     0.0
 5547    1  0   1.028     0.0     0.0     0.0     0.0     0.0     0.0
 MIRANDA-2000  -141.3     0.0     0.0     0.0     0.0     0.0     0.0
                                                  25.4%                 5541 MIRANDA--230  2   -23.7   -10.9    25.4
                                                  25.4%                 5543 MIRANDA--069  2    23.7    10.9    25.4
                                                   0.0%                 5544 MIRANDA13-2   1     0.0     0.0     0.0
 5548    1  0   1.028     0.0     0.0     0.0     0.0     0.0     0.0
 MIRANDA-1000  -141.3     0.0     0.0     0.0     0.0     0.0     0.0
                                                  24.7%                 5541 MIRANDA--230  1   -23.1   -10.6    24.7
                                                  20.1%                 5543 MIRANDA--069  1    18.9     8.5    20.1
                                                  15.1%                 5545 MIRANDA-1013  1     4.2     2.0     4.5
 5549    1  0   0.922     0.0     0.0     0.0     0.0     0.0     0.0
 MIRANDA--000  -144.0     0.0     0.0     0.0     0.0     0.0     0.0
                                                  96.3%                 5541 MIRANDA--230  1   -81.2   -36.1    96.3
```

```
                                                 96.3%                 5542 MIRANDA--138  1    81.2    36.1    96.3
                                                  0.0%                 5546 MIRANDA-2013  1     0.0     0.0     0.0
CEPEL - CENTRO DE PESQUISAS DE ENERGIA ELETRICA - PROGRAMA DE ANALISE DE REDES - V08MAR05A                                PAG. 480

ANUAL 06/07 * SETEMBRO 2006 PESADA S/SE 19H N/NE 19H * ANAT0 - FSE - C13
RELATORIO COMPLETO DO SISTEMA * AREA 58 * *      ENORTE (AREA MARANHAO)      *

X----------------- D A D O S  -  B A R R A -------------------------X------------ F L U X O S  -  C I R C U I T O S ------------X
 DA BARRA      TENSAO GERACAO INJ EQV  CARGA   ELO CC  SHUNT    MOTOR
 NUM. KV TIPO   MOD/     MW/     MW/     MW/     MW/   Mvar/     MW/
     NOME       ANG     Mvar    Mvar    Mvar    Mvar   EQUIV    Mvar  PARA BARRA                    FLUXOS
                                                FLUXO % SHUNT L         NUM.     NOME     NC     MW    Mvar  MVA/V_d   TAP  DEFAS TIE
X------------X-------X-------X-------X-------X-------X-------X-------X----X------------X--X-------X-------X-------X------X-----X---X

 5550  500  0   1.029     0.0     0.0     0.0     0.0  -144.0     0.0
 S.LUISII-500  -133.8     0.0     0.0     0.0     0.0     0.0     0.0                                  -211.7 SHL
                                                 63.5%                 5551 S.LUISII-230  1   386.4    65.7   380.9 1.001*        61
                                                 63.5%                 5551 S.LUISII-230  2   386.4    65.7   380.9 1.001*        61
                                                 63.5%                 5551 S.LUISII-230  3   386.4    65.7   380.9 1.001*        61
                                                 37.7%  -105.9         5580 P.DUTRA--500  1  -525.4  -142.7   529.2
                                                 27.6%  -105.9         5580 P.DUTRA--500  2  -633.7  -198.5   645.4
 5556    1  1   1.020     0.0     0.0     0.0     0.0     0.0     0.0
 SAOLUIZ--1CS  -136.3    14.1     0.0     0.0     0.0     0.0     0.0
                                                 21.9%                 5551 S.LUISII-230  1     0.0    14.1    13.8               61
 5557    1  0   0.996     0.0     0.0     0.0     0.0     0.0     0.0
 UTS-01G2-0MQ  -136.3     0.0     0.0     0.0     0.0     0.0     0.0
                                                  0.0%                 5551 S.LUISII-230  1     0.0     0.0     0.0               61
 5561  230  0   1.005     0.0     0.0     0.0     0.0     0.0     0.0
 S.LUIS-I-230  -137.2     0.0     0.0     0.0     0.0     0.0     0.0
                                                 58.5%                 5551 S.LUISII-230  1  -111.4   -79.8   136.4               61
                                                 58.5%                 5551 S.LUISII-230  2  -111.4   -79.8   136.4               61
                                                 89.0%                 5563 S.LUIS-I-069  1    72.7    52.1    89.0 0.923*
                                                 91.9%                 5563 S.LUIS-I-069  2    75.0    53.8    91.9 0.923*
                                                 91.9%                 5563 S.LUIS-I-069  3    75.0    53.8    91.9 0.923*
                                                  0.0%                 5568 S.LUIS-I-000  1     0.0     0.0     0.0 0.979*
 5562   14  0   1.029     0.0     0.0     0.0     0.0     0.0     0.0
 S.LUIS-I6913  -142.1     0.0     0.0     0.0     0.0     0.0     0.0
                                                  0.0%                 5563 S.LUIS-I-069  1     0.0     0.0     0.0
 5563   69  0   1.029     0.0     0.0   222.8     0.0     0.0     0.0
 S.LUIS-I-069  -142.1     0.0     0.0   132.2     0.0     0.0     0.0
                                                 82.1%                 5561 S.LUIS-I-230  1   -72.7   -43.1    82.1
                                                 84.8%                 5561 S.LUIS-I-230  2   -75.0   -44.6    84.8
                                                 84.8%                 5561 S.LUIS-I-230  3   -75.0   -44.6    84.8
                                                  0.0%                 5562 S.LUIS-I6913  1     0.0     0.0     0.0 1.000*
 5565   14  0   1.026     0.0     0.0     0.0     0.0     0.0     0.0
 S.LUIS-I-013  -137.2     0.0     0.0     0.0     0.0     0.0     0.0
                                                  0.0%                 5568 S.LUIS-I-000  1     0.0     0.0     0.0
 5568    1  0   1.026     0.0     0.0     0.0     0.0     0.0     0.0
 S.LUIS-I-000  -137.2     0.0     0.0     0.0     0.0     0.0     0.0
                                                  0.0%                 5561 S.LUIS-I-230  1     0.0     0.0     0.0
                                                  0.0%                 5565 S.LUIS-I-013  1     0.0     0.0     0.0 1.000F
CEPEL - CENTRO DE PESQUISAS DE ENERGIA ELETRICA - PROGRAMA DE ANALISE DE REDES - V08MAR05A                                PAG. 481

ANUAL 06/07 * SETEMBRO 2006 PESADA S/SE 19H N/NE 19H * ANAT0 - FSE - C13
RELATORIO COMPLETO DO SISTEMA * AREA 58 * *      ENORTE (AREA MARANHAO)      *

X----------------- D A D O S  -  B A R R A -------------------------X------------ F L U X O S  -  C I R C U I T O S ------------X
 DA BARRA      TENSAO GERACAO INJ EQV  CARGA   ELO CC  SHUNT    MOTOR
 NUM. KV TIPO   MOD/     MW/     MW/     MW/     MW/   Mvar/     MW/
     NOME       ANG     Mvar    Mvar    Mvar    Mvar   EQUIV    Mvar  PARA BARRA                    FLUXOS
```

```
                                                   FLUXO % SHUNT L          NUM.     NOME     NC     MW    Mvar  MVA/V_d   TAP  DEFAS TIE
X------------X-------X-------X-------X-------X-------X-------X-------X----X------------X--X-------X-------X-------X------X-----X---X

 5580  500  0   1.076     0.0     0.0     0.0     0.0     0.0     0.0
 P.DUTRA--500  -123.6     0.0     0.0     0.0     0.0     0.0     0.0                                -1198.2 SHL
                                                 40.2%  -169.0         5500 TERES-II-500  1   561.5    19.6   522.2                57
                                                 17.6%  -169.0         5500 TERES-II-500  2   574.2    26.1   534.2                57
                                                 22.2%  -222.3         5510 B.ESPER.-500  1   328.4    60.9   310.4                57
                                                 35.6%  -155.1         5550 S.LUISII-500  1   533.1    67.4   499.4
                                                 25.6%  -155.1         5550 S.LUISII-500  2   641.2    65.3   599.0
                                                 62.3%                 5588 PDD-ATR--000  1   172.0   -62.4   170.0 1.100F
                                                 45.5%  -172.5         6512 PD-C1-BCS500  1  -826.7   -15.1   768.5                59
                                                 47.3%  -155.1         6514 PD-C2-BCS500  1 -1010.3   -94.4   943.1                59
                                                 45.5%                 6517 PD-C3-BCS500  1  -973.4   -67.3   906.9                59
 5581  230  0   1.017     0.0     0.0     0.0     0.0     0.0     0.0
 P.DUTRA--230  -126.5     0.0     0.0     0.0     0.0     0.0     0.0
                                                 57.7%                 5531 PERITORO-230  1   140.1     6.2   137.9
                                                 49.1%                 5582 PDD-CS12-000  1     0.0   -99.7    98.1 1.022F
                                                 61.2%                 5588 PDD-ATR--000  1  -172.0    72.4   183.6 1.019F
                                                 75.3%                 5589 P.DUTRA--000  1    31.9    21.1    37.6 0.916*
 5582    1  0   0.996     0.0     0.0     0.0     0.0     0.0     0.0
 PDD-CS12-000  -126.5     0.0     0.0     0.0     0.0     0.0     0.0
                                                 50.1%                 5581 P.DUTRA--230  1     0.0    99.9   100.3
                                                 50.1%                 5586 PDUTRA---2CS  1     0.0   -99.9   100.3
 5583   69  0   1.029     0.0     0.0    31.9     0.0     0.0     0.0
 P.DUTRA--069  -134.0     0.0     0.0    15.5     0.0     0.0     0.0
                                                 68.9%                 5589 P.DUTRA--000  1   -31.9   -15.5    34.5
 5584   14  0   1.053     0.0     0.0     0.0     0.0     0.0     0.0
 P.DUTRA-2013  -131.5     0.0     0.0     0.0     0.0     0.0     0.0
                                                  0.0%                 5589 P.DUTRA--000  1     0.0     0.0     0.0
 5585   14  0   0.995     0.0     0.0     0.0     0.0     0.0     0.0
 P.DUTRA--013  -126.1     0.0     0.0     0.0     0.0     0.0     0.0
                                                  0.0%                 5588 PDD-ATR--000  1     0.0     0.0     0.0
 5586    1  1   1.030     0.0     0.0     0.0     0.0     0.0     0.0
 PDUTRA---2CS  -126.5   103.3     0.0     0.0     0.0     0.0     0.0
                                                 50.1%                 5582 PDD-CS12-000  1     0.0   103.3   100.3
 5588    1  0   0.995     0.0     0.0     0.0     0.0     0.0     0.0
 PDD-ATR--000  -126.1     0.0     0.0     0.0     0.0     0.0     0.0
                                                 68.5%                 5580 P.DUTRA--500  1  -172.0    70.9   187.0
                                                 62.3%                 5581 P.DUTRA--230  1   172.0   -70.9   187.0
                                                  0.0%                 5585 P.DUTRA--013  1     0.0     0.0     0.0
```





```
X----------------- D A D O S  -  B A R R A -------------------------X------------ F L U X O S  -  C I R C U I T O S ------------X
 DA BARRA      TENSAO GERACAO INJ EQV  CARGA   ELO CC  SHUNT    MOTOR
 NUM. KV TIPO   MOD/     MW/     MW/     MW/     MW/   Mvar/     MW/
     NOME       ANG     Mvar    Mvar    Mvar    Mvar   EQUIV    Mvar  PARA BARRA                    FLUXOS
                                                   FLUXO % SHUNT L          NUM.     NOME     NC     MW    Mvar  MVA/V_d   TAP  DEFAS TIE
X------------X-------X-------X-------X-------X-------X-------X-------X----X------------X--X-------X-------X-------X------X-----X---X

 5589    1  0   1.053     0.0     0.0     0.0     0.0     0.0     0.0
 P.DUTRA--000  -131.5     0.0     0.0     0.0     0.0     0.0     0.0
                                                 68.9%                 5581 P.DUTRA--230  1   -31.9   -17.3    34.5
                                                 68.9%                 5583 P.DUTRA--069  1    31.9    17.3    34.5
                                                  0.0%                 5584 P.DUTRA-2013  1     0.0     0.0     0.0
 5590  500  0   1.100     0.0     0.0     0.0     0.0  -164.6     0.0
 IMPERATR-500  -114.2     0.0     0.0     0.0     0.0     0.0     0.0                                -640.1 SHL
```

```
                                                  31.4%                 5591 IMPERATR-230  1   180.5   101.6   188.3 1.032F
                                                  18.2%  -180.3         6400 MARABA---500  1  -387.4    94.9   362.6                59
                                                  16.6%  -121.0         6400 MARABA---500  2  -475.4    12.5   432.3                59
                                                  46.0%  -180.3         6513 IZ-C1-BCS500  1   850.1   -79.2   776.2                59
                                                  47.5%  -158.5         6515 IZ-C2-BCS500  1  1033.6  -114.1   945.4                59
                                                  17.5%                 6700 ACAILAND.500  1   381.2   -47.0   349.2                59
                                                                    CSC 7592 IPZ-COL--500  1  -803.9   -64.0   733.1                63
                                                                    CSC 7594 IPZ-COL2-500  1  -778.7   -69.3   710.7                63
 5591  230  0   1.055     0.0     0.0     0.0     0.0     0.0     0.0
 IMPERATR-230  -115.2     0.0     0.0     0.0     0.0     0.0     0.0
                                                  32.4%                 5590 IMPERATR-500  1  -180.5   -97.4   194.3
                                                  57.7%                 5593 IMPERATR-069  1    53.7    28.7    57.7 0.993*
                                                  57.7%                 5593 IMPERATR-069  2    53.7    28.7    57.7 0.993*
                                                  15.3%                 5596 IMPERATR-3CS  1     0.0    48.4    45.9 1.022F
                                                  29.9%                 5601 P.FRANCO-230  1    73.0    -8.4    69.6
 5593   69  0   1.030     0.0     0.0   107.4     0.0     0.0     0.0
 IMPERATR-069  -118.9     0.0     0.0    48.8     0.0     0.0     0.0
                                                  57.3%                 5591 IMPERATR-230  1   -53.7   -24.4    57.3
                                                  57.3%                 5591 IMPERATR-230  2   -53.7   -24.4    57.3
 5596    1  1   1.020     0.0     0.0     0.0     0.0     0.0     0.0
 IMPERATR-3CS  -115.2   -47.8     0.0     0.0     0.0     0.0     0.0
                                                  15.6%                 5591 IMPERATR-230  1     0.0   -47.8    46.9
 5601  230  0   1.043     0.0     0.0     0.0     0.0     0.0     0.0
 P.FRANCO-230  -119.4     0.0     0.0     0.0     0.0     0.0     0.0
                                                  29.8%                 5591 IMPERATR-230  1   -72.1    -7.1    69.5
                                                  19.6%                 5603 P.FRANCO-069  1     6.2     2.8     6.5 1.003*
                                                  19.6%                 5603 P.FRANCO-069  2     6.2     2.8     6.5 1.003*
                                                  57.4%                 5608 P.FRANCO-000  1    59.8     1.5    57.4
 5602  138  0   1.030     0.0     0.0    59.8     0.0     0.0     0.0
 P.FRANCO-138  -121.7     0.0     0.0    -0.9     0.0     0.0     0.0
                                                  58.1%                 5608 P.FRANCO-000  1   -59.8     0.9    58.1 0.988*
CEPEL - CENTRO DE PESQUISAS DE ENERGIA ELETRICA - PROGRAMA DE ANALISE DE REDES - V08MAR05A                                PAG. 483

ANUAL 06/07 * SETEMBRO 2006 PESADA S/SE 19H N/NE 19H * ANAT0 - FSE - C13
RELATORIO COMPLETO DO SISTEMA * AREA 58 * *      ENORTE (AREA MARANHAO)      *

X----------------- D A D O S  -  B A R R A ------------------------X------------ F L U X O S  -  C I R C U I T O S ------------X
 DA BARRA      TENSAO GERACAO INJ EQV  CARGA   ELO CC  SHUNT    MOTOR
 NUM. KV TIPO   MOD/     MW/     MW/     MW/     MW/   Mvar/     MW/
     NOME       ANG     Mvar    Mvar    Mvar    Mvar   EQUIV    Mvar  PARA BARRA                    FLUXOS
                                                FLUXO % SHUNT L        NUM.     NOME      NC     MW    Mvar  MVA/V_d   TAP  DEFAS TIE
X------------X-------X-------X-------X-------X-------X-------X-------X----X------------X--X-------X-------X-------X------X-----X---X

 5603   69  0   1.030     0.0     0.0    12.3     0.0     0.0     0.0
 P.FRANCO-069  -120.6     0.0     0.0     5.2     0.0     0.0     0.0
                                                  19.6%                 5601 P.FRANCO-230  1    -6.2    -2.6     6.5
                                                  19.6%                 5601 P.FRANCO-230  2    -6.2    -2.6     6.5
 5605   14  0   1.042     0.0     0.0     0.0     0.0     0.0     0.0
 P.FRANCO-013  -121.9     0.0     0.0     0.0     0.0     0.0     0.0
                                                   0.0%                 5608 P.FRANCO-000  1     0.0     0.0     0.0
 5608    1  0   1.042     0.0     0.0     0.0     0.0     0.0     0.0
 P.FRANCO-000  -121.9     0.0     0.0     0.0     0.0     0.0     0.0
                                                  57.4%                 5601 P.FRANCO-230  1   -59.8     1.1    57.4
                                                  57.4%                 5602 P.FRANCO-138  1    59.8    -1.1    57.4
                                                   0.0%                 5605 P.FRANCO-013  1     0.0     0.0     0.0


TOTAIS DA AREA 58
```

```
X--------X--------X--------X--------X--------X--------X--------X--------X
  GERACAO  INJ EQV   CARGA   ELO CC    SHUNT   EXPORT   IMPORT   PERDAS
    MW/      MW/      MW/     MW/     Mvar/     MW/      MW/      MW/
   Mvar     Mvar     Mvar     Mvar     EQUIV    Mvar     Mvar     Mvar
X--------X--------X--------X--------X--------X--------X--------X--------X

      0.0      0.0    661.1      0.0   -308.5   4880.7   5574.3     32.5
     69.5      0.0    304.1      0.0      0.0    349.0    887.4     -4.7
CEPEL - CENTRO DE PESQUISAS DE ENERGIA ELETRICA - PROGRAMA DE ANALISE DE REDES - V08MAR05A                                PAG. 484

ANUAL 06/07 * SETEMBRO 2006 PESADA S/SE 19H N/NE 19H * ANAT0 - FSE - C13
RELATORIO COMPLETO DO SISTEMA * AREA 59 * *   ENORTE (AREA TUCURUI-BELEM)    *

X----------------- D A D O S  -  B A R R A -------------------------X------------ F L U X O S  -  C I R C U I T O S ------------X
 DA BARRA      TENSAO GERACAO INJ EQV  CARGA   ELO CC  SHUNT    MOTOR
 NUM. KV TIPO   MOD/     MW/     MW/     MW/     MW/   Mvar/     MW/
     NOME       ANG     Mvar    Mvar    Mvar    Mvar   EQUIV    Mvar  PARA BARRA                    FLUXOS
                                                FLUXO % SHUNT L         NUM.     NOME     NC     MW    Mvar  MVA/V_d   TAP  DEFAS TIE
X------------X-------X-------X-------X-------X-------X-------X-------X----X------------X--X-------X-------X-------X------X-----X---X

 6398   35  0   1.008     0.0     0.0    17.5     0.0     0.0     0.0
 CARAJAS 34.5  -126.8     0.0     0.0     7.4     0.0     0.0     0.0
                                               62.8%                    6407 CARAJAS  230  1   -17.5    -7.4    18.8
 6400  500  0   1.098     0.0     0.0     0.0     0.0     0.0     0.0
 MARABA---500  -109.9     0.0     0.0     0.0     0.0     0.0     0.0                                -635.4 SHL
                                               17.8%  -157.9         5590 IMPERATR-500  1   389.7    -6.9   355.0                58
                                               16.8%  -159.1         5590 IMPERATR-500  2   477.7   -32.2   436.1                58
                                               42.3%                 6408 MAR-ATR--000  1   123.7   -28.4   115.6 1.100F
                                                0.0%                 6507 MB-C4-BCS500  1     0.0     0.0     0.0
                                               42.8%                 6508 MAR-ATR-2000  2   178.1    71.7   174.9 1.100F
                                               16.9%                 6509 MB-C3-BCS500  1  -361.0   -77.0   336.2
                                               30.1%  -160.3         6510 MB-C1-BCS500  1  -639.9   152.8   599.2
                                               36.6%  -157.9         6511 MB-C2-BCS500  1  -788.6   135.8   728.8
                                               30.0%                 6701 AC-MB-BCS500  1   620.2  -215.9   598.1
                                                0.0%                 6703 AC-MB-BCS500  1     0.0     0.0     0.0
 6401  230  0   1.055     0.0     0.0   107.4     0.0     0.0     0.0
 MARABA---230  -112.1     0.0     0.0     9.7     0.0     0.0     0.0
                                               35.1%                 6402 MAR-AUX--000  1    12.1     2.0    11.6 1.000F
                                               35.1%                 6402 MAR-AUX--000  2    12.1     2.0    11.6 1.000F
                                                4.4%                 6405 MARABA---1CS  1     0.0     7.4     7.0 1.050F
                                               97.6%                 6407 CARAJAS  230  1   170.3    14.2   162.0
                                               43.2%                 6408 MAR-ATR--000  1  -132.6    33.5   129.7 1.046F
                                               38.1%                 6508 MAR-ATR-2000  2  -169.2   -63.5   171.3 1.073F
                                                0.1%                 6561 MB-CELPA-230  1     0.0    -5.4     5.1
 6402    1  0   1.048     0.0     0.0     0.0     0.0     0.0     0.0
 MAR-AUX--000  -114.5     0.0     0.0     0.0     0.0     0.0     0.0
                                               35.1%                 6401 MARABA---230  1   -12.1    -1.5    11.6
                                               35.1%                 6401 MARABA---230  2   -12.1    -1.5    11.6
                                               35.1%                 6403 MARABA---069  1    12.1     1.5    11.6
                                               35.1%                 6403 MARABA---069  2    12.1     1.5    11.6
                                                0.0%                 6404 MAR-AUX--013  1     0.0     0.0     0.0
                                                0.0%                 6404 MAR-AUX--013  2     0.0     0.0     0.0
 6403   69  0   1.049     0.0     0.0    24.1     0.0     0.0     0.0
 MARABA---069  -114.4     0.0     0.0     3.1     0.0     0.0     0.0
                                               35.1%                 6402 MAR-AUX--000  1   -12.1    -1.6    11.6
                                               35.1%                 6402 MAR-AUX--000  2   -12.1    -1.6    11.6
 6404   14  0   1.048     0.0     0.0     0.0     0.0     0.0     0.0
 MAR-AUX--013  -114.5     0.0     0.0     0.0     0.0     0.0     0.0
                                                0.0%                 6402 MAR-AUX--000  1     0.0     0.0     0.0
```

```
                                                 0.0%                 6402 MAR-AUX--000  2     0.0     0.0     0.0
CEPEL - CENTRO DE PESQUISAS DE ENERGIA ELETRICA - PROGRAMA DE ANALISE DE REDES - V08MAR05A                                PAG. 485

ANUAL 06/07 * SETEMBRO 2006 PESADA S/SE 19H N/NE 19H * ANAT0 - FSE - C13
RELATORIO COMPLETO DO SISTEMA * AREA 59 * *   ENORTE (AREA TUCURUI-BELEM)    *

X----------------- D A D O S  -  B A R R A -------------------------X------------ F L U X O S  -  C I R C U I T O S ------------X
 DA BARRA      TENSAO GERACAO INJ EQV  CARGA   ELO CC  SHUNT    MOTOR
 NUM. KV TIPO   MOD/     MW/     MW/     MW/     MW/   Mvar/     MW/
     NOME       ANG     Mvar    Mvar    Mvar    Mvar   EQUIV    Mvar  PARA BARRA                    FLUXOS
                                                FLUXO % SHUNT L         NUM.     NOME     NC     MW    Mvar  MVA/V_d   TAP  DEFAS TIE
X------------X-------X-------X-------X-------X-------X-------X-------X----X------------X--X-------X-------X-------X------X-----X---X

 6405    1  1   1.000     0.0     0.0     0.0     0.0     0.0     0.0
 MARABA---1CS  -112.1    -7.4     0.0     0.0     0.0     0.0     0.0
                                                 4.6%                 6401 MARABA---230  1     0.0    -7.4     7.4
 6406   14  0   0.986     0.0     0.0     0.0     0.0     0.0     0.0
 MARABA---013  -112.4     0.0     0.0     0.0     0.0     0.0     0.0
                                                 5.6%                 6408 MAR-ATR--000  1     8.9     0.1     9.0 0.975F
                                                 9.6%                 6508 MAR-ATR-2000  2    -8.9    -0.1     9.0
 6407  230  0   1.000     0.0     0.0    61.5     0.0    30.0     0.0
 CARAJAS  230  -124.6     0.0     0.0    12.5     0.0     0.0     0.0
                                                64.4%                 6398 CARAJAS 34.5  1    17.5     8.2    19.3 0.975F
                                                98.5%                 6401 MARABA---230  1  -163.5    -4.4   163.5
                                                51.6%                 6409 CVRD-----230  1    84.5    13.7    85.6
 6408    1  0   1.011     0.0     0.0     0.0     0.0     0.0     0.0
 MAR-ATR--000  -112.7     0.0     0.0     0.0     0.0     0.0     0.0
                                                46.6%                 6400 MARABA---500  1  -123.7    35.0   127.2
                                                45.2%                 6401 MARABA---230  1   132.6   -34.9   135.6
                                                 5.5%                 6406 MARABA---013  1    -8.9     0.0     8.8
 6409  230  0   0.991     0.0     0.0    84.1     0.0     0.0     0.0
 CVRD-----230  -126.0     0.0     0.0    17.0     0.0     0.0     0.0
                                                52.1%                 6407 CARAJAS  230  1   -84.1   -17.0    86.6
 6410  500  0   1.075     0.0     0.0     0.0     0.0     0.0     0.0
 TUCURUI--500  -103.4     0.0     0.0     0.0     0.0     0.0     0.0
                                                20.2%                 6418 TUC-ATR--000  1    16.7    12.2    19.2 1.000F
                                                64.9%                 6419 TUCURUI1-4GR  1 -1260.0   388.1  1226.4 1.050F
                                                81.1%                 6420 TUCURUI2-3GR  1  -945.0   291.1   919.8 1.050F
                                                 0.0%                 6421 TUCURUI2-000  1     0.0     0.0     0.0 1.050F
                                                81.1%                 6422 TUCURUI3-4GR  1 -1260.0   388.1  1226.4 1.050F
                                                 0.0%                 6423 TUCURUI3-000  1     0.0     0.0     0.0
                                                41.3%                 6430 TUCURUI2-500  1   957.7  -285.7   929.6
                                                29.5%                 6458 TUC-ATR-1000  1   122.5   -42.7   120.7 1.100F
                                                44.2%                 6460 V.CONDE--500  2   922.9  -210.8   880.6
                                                32.5%                 6510 MB-C1-BCS500  1   648.5  -252.3   647.3
                                                39.6%                 6511 MB-C2-BCS500  1   796.8  -288.0   788.1
 6411   14 -1   1.016     0.0     0.0     0.0     0.0     0.0     0.0
 GA1-TUC--013  -104.3     0.0     0.0     0.0     0.0     0.0     0.0
                                                 0.0%                 6413 TUCURUI--069  1     0.0     0.0     0.0
 6412   14  1   1.015    20.0     0.0     0.0     0.0     0.0     0.0
 GA2-TUC--013  -101.6     0.3     0.0     0.0     0.0     0.0     0.0
                                                78.8%                 6413 TUCURUI--069  1    20.0     0.3    19.7
CEPEL - CENTRO DE PESQUISAS DE ENERGIA ELETRICA - PROGRAMA DE ANALISE DE REDES - V08MAR05A                                PAG. 486

ANUAL 06/07 * SETEMBRO 2006 PESADA S/SE 19H N/NE 19H * ANAT0 - FSE - C13
RELATORIO COMPLETO DO SISTEMA * AREA 59 * *   ENORTE (AREA TUCURUI-BELEM)    *

X----------------- D A D O S  -  B A R R A -------------------------X------------ F L U X O S  -  C I R C U I T O S ------------X
 DA BARRA      TENSAO GERACAO INJ EQV  CARGA   ELO CC  SHUNT    MOTOR
 NUM. KV TIPO   MOD/     MW/     MW/     MW/     MW/   Mvar/     MW/
```

```
     NOME       ANG     Mvar    Mvar    Mvar    Mvar   EQUIV    Mvar  PARA BARRA                    FLUXOS
                                                FLUXO % SHUNT L         NUM.     NOME     NC     MW    Mvar  MVA/V_d   TAP  DEFAS TIE
X------------X-------X-------X-------X-------X-------X-------X-------X----X------------X--X-------X-------X-------X------X-----X---X

 6413   69  0   1.041     0.0     0.0     0.0     0.0     0.0     0.0
 TUCURUI--069  -104.3     0.0     0.0     0.0     0.0     0.0     0.0
                                                 0.0%                  6411 GA1-TUC--013  1     0.0     0.0     0.0 1.025F
                                                76.9%                  6412 GA2-TUC--013  1   -20.0     0.7    19.2 1.025F
                                                24.5%                  6414 TUC.OBRAS013  1     7.5     3.8     8.1 1.028*
                                                 0.0%                  6417 TUCURUI--013  1     0.0     0.0     0.0 1.029*
                                                19.6%                  6418 TUC-ATR--000  1   -16.7   -11.8    19.6
                                                78.0%                  6453 TUC.VILA-069  1    29.1     7.3    28.9
 6414   14  0   1.002     0.0     0.0     7.5     0.0     0.0     0.0
 TUC.OBRAS013  -105.5     0.0     0.0     3.6     0.0     0.0     0.0
                                                25.2%                  6413 TUCURUI--069  1    -7.5    -3.6     8.3
 6415   14  0   1.062     0.0     0.0     0.0     0.0     0.0     0.0
 TUCURUI--013  -104.4     0.0     0.0     0.0     0.0     0.0     0.0
                                                 0.0%                  6418 TUC-ATR--000  1     0.0     0.0     0.0
 6416  230  0   0.950     0.0     0.0    66.8     0.0     0.0     0.0
 TUC-ATR--230  -105.0     0.0     0.0    18.7     0.0     0.0     0.0
                                          SUP  146.8%                  6458 TUC-ATR-1000  1  -122.5    46.8   138.0
                                                28.3%                  6521 ALTAMIRA-230  1    55.7   -65.4    90.4
 6417   14  0   1.012     0.0     0.0     0.0     0.0     0.0     0.0
 TUCURUI--013  -104.3     0.0     0.0     0.0     0.0     0.0     0.0
                                                 0.0%                  6413 TUCURUI--069  1     0.0     0.0     0.0
 6418    1  0   1.062     0.0     0.0     0.0     0.0     0.0     0.0
 TUC-ATR--000  -104.4     0.0     0.0     0.0     0.0     0.0     0.0
                                                20.2%                  6410 TUCURUI--500  1   -16.7   -11.8    19.2
                                                19.2%                  6413 TUCURUI--069  1    16.7    11.8    19.2 1.020F
                                                 0.0%                  6415 TUCURUI--013  1     0.0     0.0     0.0 1.000F
 6419    1  1   0.997  1260.0     0.0     0.0     0.0     0.0     0.0
 TUCURUI1-4GR   -97.3  -245.5     0.0     0.0     0.0     0.0     0.0
                                                68.1%                  6410 TUCURUI--500  1  1260.0  -245.5  1287.8
 6420    1  1   0.997   945.0     0.0     0.0     0.0     0.0     0.0
 TUCURUI2-3GR   -97.3  -184.1     0.0     0.0     0.0     0.0     0.0
                                                85.2%                  6410 TUCURUI--500  1   945.0  -184.1   965.8
 6421    1 -1   1.024     0.0     0.0     0.0     0.0     0.0     0.0
 TUCURUI2-000  -103.4     0.0     0.0     0.0     0.0     0.0     0.0
                                                 0.0%                  6410 TUCURUI--500  1     0.0     0.0     0.0
 6422    1  1   0.997  1260.0     0.0     0.0     0.0     0.0     0.0
 TUCURUI3-4GR   -97.3  -245.5     0.0     0.0     0.0     0.0     0.0
                                                85.2%                  6410 TUCURUI--500  1  1260.0  -245.5  1287.8
CEPEL - CENTRO DE PESQUISAS DE ENERGIA ELETRICA - PROGRAMA DE ANALISE DE REDES - V08MAR05A                                PAG. 487

ANUAL 06/07 * SETEMBRO 2006 PESADA S/SE 19H N/NE 19H * ANAT0 - FSE - C13
RELATORIO COMPLETO DO SISTEMA * AREA 59 * *   ENORTE (AREA TUCURUI-BELEM)    *

X----------------- D A D O S  -  B A R R A ------------------------X------------ F L U X O S  -  C I R C U I T O S ------------X
 DA BARRA      TENSAO GERACAO INJ EQV  CARGA   ELO CC  SHUNT    MOTOR
 NUM. KV TIPO   MOD/     MW/     MW/     MW/     MW/   Mvar/     MW/
     NOME       ANG     Mvar    Mvar    Mvar    Mvar   EQUIV    Mvar  PARA BARRA                    FLUXOS
                                                FLUXO % SHUNT L         NUM.     NOME     NC     MW    Mvar  MVA/V_d   TAP  DEFAS TIE
X------------X-------X-------X-------X-------X-------X-------X-------X----X------------X--X-------X-------X-------X------X-----X---X

 6423    1 -1   1.075     0.0     0.0     0.0     0.0     0.0     0.0
 TUCURUI3-000  -103.4     0.0     0.0     0.0     0.0     0.0     0.0
                                                 0.0%                  6410 TUCURUI--500  1     0.0     0.0     0.0
 6424    1 -1   1.046     0.0     0.0     0.0     0.0     0.0     0.0
 TUCURUI5-000  -107.1     0.0     0.0     0.0     0.0     0.0     0.0
                                                 0.0%                  6430 TUCURUI2-500  1     0.0     0.0     0.0
```

```
 6425    1 -1   1.046     0.0     0.0     0.0     0.0     0.0     0.0
 TUCURUI6-000  -107.1     0.0     0.0     0.0     0.0     0.0     0.0
                                                 0.0%                    6430 TUCURUI2-500  1     0.0     0.0     0.0
 6430  500  0   1.099     0.0     0.0     0.0     0.0     0.0     0.0
 TUCURUI2-500  -107.1     0.0     0.0     0.0     0.0     0.0     0.0
                                                41.3%                    6410 TUCURUI--500  1  -957.7   354.8   929.6
                                                 0.0%                    6424 TUCURUI5-000  1     0.0     0.0     0.0 1.050F
                                                 0.0%                    6425 TUCURUI6-000  1     0.0     0.0     0.0 1.050F
                                                27.7%                    6460 V.CONDE--500  1   595.0  -166.3   562.4
                                                 0.0%                    6507 MB-C4-BCS500  1     0.0     0.0     0.0
                                                18.7%                    6509 MB-C3-BCS500  1   362.6  -188.5   372.0
 6451   14  0   1.000     0.0     0.0     4.1     0.0     0.0     0.0
 CAMETA---013  -111.4     0.0     0.0     2.6     0.0     0.0     0.0
                                                27.0%                    6457 CAMETA---069  1    -2.0    -1.3     2.4 1.061*
                                                27.0%                    6457 CAMETA---069  2    -2.0    -1.3     2.4 1.061*
 6452   35  0   1.023     0.0     0.0    12.1     0.0     0.0     0.0
 TUC.VILA-034  -107.0     0.0     0.0     2.9     0.0     0.0     0.0
                                                40.7%                    6459 TUC.VILA-000  1   -12.1    -2.9    12.2
 6453   69  0   1.032     0.0     0.0     0.0     0.0     0.0     0.0
 TUC.VILA-069  -105.0     0.0     0.0     0.0     0.0     0.0     0.0
                                                78.1%                    6413 TUCURUI--069  1   -29.0    -7.0    28.9
                                                50.7%                    6454 TUC.VILA-013  1     6.7    -1.4     6.6 0.940I
                                                79.9%                    6454 TUC.VILA-013  2     5.4     5.1     7.2 0.900I
                                                27.4%                    6457 CAMETA---069  1     4.8    -0.1     4.7
                                                40.7%                    6459 TUC.VILA-000  1    12.1     3.4    12.2 1.000F
 6454   14  0   1.107     0.0     0.0    12.0     0.0     0.0     0.0
 TUC.VILA-013  -107.2     0.0     0.0     3.1     0.0     0.0     0.0
                                                47.7%                    6453 TUC.VILA-069  1    -6.7     1.7     6.2
                                                71.9%                    6453 TUC.VILA-069  2    -5.4    -4.7     6.5
 6455   14  0   0.991     0.0     0.0     0.0     0.0     0.0     0.0
 TUC.ATR--013  -105.4     0.0     0.0     0.0     0.0     0.0     0.0
                                                 0.0%                    6458 TUC-ATR-1000  1     0.0     0.0     0.0
```



ANUAL 06/07 * SETEMBRO 2006 PESADA S/SE 19H N/NE 19H * ANAT0 - FSE - C13
RELATORIO COMPLETO DO SISTEMA * AREA 59 * *  ENORTE (AREA TUCURUI-BELEM)  *

```
X----------------- D A D O S  -  B A R R A -------------------------X------------ F L U X O S  -  C I R C U I T O S ------------X
 DA BARRA      TENSAO GERACAO INJ EQV  CARGA   ELO CC  SHUNT    MOTOR
 NUM. KV TIPO   MOD/     MW/     MW/     MW/     MW/   Mvar/     MW/
     NOME       ANG     Mvar    Mvar    Mvar    Mvar   EQUIV    Mvar  PARA BARRA                    FLUXOS
                                                FLUXO % SHUNT L         NUM.     NOME     NC     MW    Mvar  MVA/V_d   TAP  DEFAS TIE
X------------X-------X-------X-------X-------X-------X-------X-------X----X------------X--X-------X-------X-------X------X-----X---X

 6456   14  0   1.022     0.0     0.0     0.0     0.0     0.0     0.0
 TUC.VILA-013  -107.3     0.0     0.0     0.0     0.0     0.0     0.0
                                                 0.0%                    6459 TUC.VILA-000  1     0.0     0.0     0.0
 6457   69  0   0.958     0.0     0.0     0.5     0.0     0.0     0.0
 CAMETA---069  -110.1     0.0     0.0     0.2     0.0     0.0     0.0
                                                28.6%                    6451 CAMETA---013  1     2.0     1.4     2.6
                                                28.6%                    6451 CAMETA---013  2     2.0     1.4     2.6
                                                33.5%                    6453 TUC.VILA-069  1    -4.6    -2.9     5.7
 6458    1  0   0.991     0.0     0.0     0.0     0.0     0.0     0.0
 TUC-ATR-1000  -105.4     0.0     0.0     0.0     0.0     0.0     0.0
                                                32.5%                    6410 TUCURUI--500  1  -122.5    47.8   132.8
                                            SUP 141.2%                    6416 TUC-ATR--230  1   122.5   -47.8   132.8 1.040*
                                                 0.0%                    6455 TUC.ATR--013  1     0.0     0.0     0.0
 6459    1  0   1.022     0.0     0.0     0.0     0.0     0.0     0.0
 TUC.VILA-000  -107.3     0.0     0.0     0.0     0.0     0.0     0.0
                                                40.7%                    6452 TUC.VILA-034  1    12.1     2.9    12.2 1.000F
```

```
                                                 40.7%                 6453 TUC.VILA-069  1   -12.1    -2.9    12.2
                                                  0.0%                 6456 TUC.VILA-013  1     0.0     0.0     0.0
 6460  500  0   1.071     0.0     0.0     0.0     0.0     0.0     0.0
 V.CONDE--500  -119.1     0.0     0.0     0.0     0.0     0.0     0.0                                -366.5 SHL
                                                 42.6%  -183.5         6410 TUCURUI--500  2  -907.3    62.7   849.2
                                                 26.9%  -183.0         6430 TUCURUI2-500  1  -585.4   -23.4   547.0
                                                 68.1%                 6461 V.CONDE--230  1   497.6   -13.1   464.7              61
                                                 68.1%                 6461 V.CONDE--230  2   497.6   -13.1   464.7              61
                                                 68.1%                 6461 V.CONDE--230  3   497.6   -13.1   464.7              61
 6462    1  0   1.028     0.0     0.0     0.0     0.0     0.0     0.0
 V.CONDE-2000  -126.6     0.0     0.0     0.0     0.0     0.0     0.0
                                                 55.8%                 6461 V.CONDE--230  1   -18.8    -2.4    18.4              61
                                                 55.8%                 6463 V.CONDE--069  1    18.8     2.4    18.4
                                                  0.0%                 6464 V.CONDE--013  1     0.0     0.0     0.0
 6463   69  0   1.028     0.0     0.0    56.4     0.0     0.0     0.0
 V.CONDE--069  -126.6     0.0     0.0     7.2     0.0     0.0     0.0
                                                 55.8%                 6462 V.CONDE-2000  1   -18.8    -2.4    18.4
                                                 55.8%                 6467 V.CONDE-1000  1   -18.8    -2.4    18.4
                                                 55.8%                 6468 V.CONDE-3000  1   -18.8    -2.4    18.4
 6464   14  0   1.028     0.0     0.0     0.0     0.0     0.0     0.0
 V.CONDE--013  -126.6     0.0     0.0     0.0     0.0     0.0     0.0
                                                  0.0%                 6462 V.CONDE-2000  1     0.0     0.0     0.0
                                                  0.0%                 6467 V.CONDE-1000  1     0.0     0.0     0.0
                                                  0.0%                 6468 V.CONDE-3000  3     0.0     0.0     0.0
CEPEL - CENTRO DE PESQUISAS DE ENERGIA ELETRICA - PROGRAMA DE ANALISE DE REDES - V08MAR05A                          PAG. 489

ANUAL 06/07 * SETEMBRO 2006 PESADA S/SE 19H N/NE 19H * ANAT0 - FSE - C13
RELATORIO COMPLETO DO SISTEMA * AREA 59 * *   ENORTE (AREA TUCURUI-BELEM)    *

X----------------- D A D O S  -  B A R R A -------------------------X------------ F L U X O S  -  C I R C U I T O S ------------X
 DA BARRA      TENSAO GERACAO INJ EQV  CARGA   ELO CC  SHUNT    MOTOR
 NUM. KV TIPO   MOD/     MW/     MW/     MW/     MW/   Mvar/     MW/
     NOME       ANG     Mvar    Mvar    Mvar    Mvar   EQUIV    Mvar  PARA BARRA                    FLUXOS
                                                FLUXO % SHUNT L        NUM.     NOME     NC     MW    Mvar  MVA/V_d   TAP  DEFAS TIE
X------------X-------X-------X-------X-------X-------X-------X-------X----X------------X--X-------X-------X-------X------X-----X---X

 6465    1  1   0.970     0.0     0.0     0.0     0.0     0.0     0.0
 VCONDE---2CS  -122.9   -61.2     0.0     0.0     0.0     0.0     0.0
                                                 19.7%                 6461 V.CONDE--230  1     0.0   -61.2    63.1              61
 6467    1  0   1.028     0.0     0.0     0.0     0.0     0.0     0.0
 V.CONDE-1000  -126.6     0.0     0.0     0.0     0.0     0.0     0.0
                                                 55.8%                 6461 V.CONDE--230  1   -18.8    -2.4    18.4              61
                                                 55.8%                 6463 V.CONDE--069  1    18.8     2.4    18.4
                                                  0.0%                 6464 V.CONDE--013  1     0.0     0.0     0.0
 6468    1  0   1.028     0.0     0.0     0.0     0.0     0.0     0.0
 V.CONDE-3000  -126.6     0.0     0.0     0.0     0.0     0.0     0.0
                                                 55.8%                 6461 V.CONDE--230  1   -18.8    -2.4    18.4              61
                                                 55.8%                 6463 V.CONDE--069  1    18.8     2.4    18.4
                                                  0.0%                 6464 V.CONDE--013  3     0.0     0.0     0.0
 6471  230  0   1.018     0.0     0.0     0.0     0.0     0.0     0.0
 GUAMA----230  -127.0     0.0     0.0     0.0     0.0     0.0     0.0
                                                 48.3%                 6461 V.CONDE--230  1  -227.9   -28.8   225.7              61
                                                 48.3%                 6461 V.CONDE--230  2  -227.9   -28.8   225.7              61
                                                 48.6%                 6472 GUAMA----069  1    69.7    25.6    72.9 0.970*
                                                 48.6%                 6472 GUAMA----069  2    69.7    25.6    72.9 0.970*
                                                 33.3%                 6481 UTINGA---230  1   158.3     3.2   155.5
                                                 33.3%                 6481 UTINGA---230  2   158.3     3.2   155.5
 6472   69  0   1.029     0.0     0.0   139.4     0.0     0.0     0.0
 GUAMA----069  -130.4     0.0     0.0    42.0     0.0     0.0     0.0
                                                 47.1%                 6471 GUAMA----230  1   -69.7   -21.0    70.7
```

```
                                                 47.1%                 6471 GUAMA----230  2   -69.7   -21.0    70.7
 6481  230  0   1.015     0.0     0.0     0.0     0.0   114.3     0.0
 UTINGA---230  -128.1     0.0     0.0     0.0     0.0     0.0     0.0
                                                 33.3%                 6471 GUAMA----230  1  -157.8    -4.9   155.6
                                                 33.3%                 6471 GUAMA----230  2  -157.8    -4.9   155.6
                                                 71.1%                 6482 UTINGA---069  1    97.9    46.1   106.7 0.951*
                                                 71.1%                 6482 UTINGA---069  2    97.9    46.1   106.7 0.951*
                                                 71.1%                 6482 UTINGA---069  3    98.0    46.1   106.7 0.951*
                                                 12.9%                 6491 STA.MARIA230  1    21.8   -14.1    25.6
 6482   69  0   1.030     0.0     0.0   293.8     0.0     0.0     0.0
 UTINGA---069  -132.8     0.0     0.0   109.5     0.0     0.0     0.0
                                                 67.6%                 6481 UTINGA---230  1   -97.9   -36.5   101.5
                                                 67.6%                 6481 UTINGA---230  2   -97.9   -36.5   101.5
                                                 67.7%                 6481 UTINGA---230  3   -98.0   -36.5   101.5
CEPEL - CENTRO DE PESQUISAS DE ENERGIA ELETRICA - PROGRAMA DE ANALISE DE REDES - V08MAR05A                                PAG. 490

ANUAL 06/07 * SETEMBRO 2006 PESADA S/SE 19H N/NE 19H * ANAT0 - FSE - C13
RELATORIO COMPLETO DO SISTEMA * AREA 59 * *   ENORTE (AREA TUCURUI-BELEM)    *

X----------------- D A D O S  -  B A R R A -------------------------X------------ F L U X O S  -  C I R C U I T O S ------------X
 DA BARRA      TENSAO GERACAO INJ EQV  CARGA   ELO CC  SHUNT    MOTOR
 NUM. KV TIPO   MOD/     MW/     MW/     MW/     MW/   Mvar/     MW/
     NOME       ANG     Mvar    Mvar    Mvar    Mvar   EQUIV    Mvar  PARA BARRA                   FLUXOS
                                                FLUXO % SHUNT L        NUM.     NOME     NC     MW    Mvar  MVA/V_d   TAP  DEFAS TIE
X------------X-------X-------X-------X-------X-------X-------X-------X----X------------X--X-------X-------X-------X------X-----X---X

 6489  230  0   1.025     0.0     0.0     0.0     0.0     0.0     0.0
 CASTANHAL     -127.8     0.0     0.0     0.0     0.0     0.0     0.0
                                                 20.2%                 6461 V.CONDE--230  1  -114.4   -16.2   112.7                61
                                                 40.4%                 6491 STA.MARIA230  1   114.4    16.2   112.7
 6491  230  0   1.017     0.0     0.0     0.0     0.0     0.0     0.0
 STA.MARIA230  -129.2     0.0     0.0     0.0     0.0     0.0     0.0
                                                 10.7%                 6481 UTINGA---230  1   -21.7    -1.1    21.4
                                                 40.6%                 6489 CASTANHAL     1  -113.9   -18.2   113.4
                                                 62.1%                 6494 STA.MARIA000  1    91.6    24.2    93.2 0.970*
                                                 43.5%                 6497 STA.MARIA000  1    44.0    -4.9    43.5 1.000F
 6492  138  0   1.030     0.0     0.0    44.0     0.0     0.0     0.0
 STA.MARIA138  -131.1     0.0     0.0    -6.4     0.0     0.0     0.0
                                                 43.2%                 6497 STA.MARIA000  1   -44.0     6.4    43.2 1.009*
 6493   69  0   1.030     0.0     0.0    91.6     0.0     0.0     0.0
 STA.MARIA069  -133.7     0.0     0.0    16.6     0.0     0.0     0.0
                                                 60.3%                 6494 STA.MARIA000  1   -91.6   -16.6    90.4
 6494    1  0   1.029     0.0     0.0     0.0     0.0     0.0     0.0
 STA.MARIA000  -134.0     0.0     0.0     0.0     0.0     0.0     0.0
                                                 60.3%                 6491 STA.MARIA230  1   -91.6   -16.1    90.4
                                                 60.3%                 6493 STA.MARIA069  1    91.6    16.1    90.4
                                                  0.0%                 6495 STA.MARIA013  1     0.0     0.0     0.0
 6495   14  0   1.029     0.0     0.0     0.0     0.0     0.0     0.0
 STA.MARIA013  -134.0     0.0     0.0     0.0     0.0     0.0     0.0
                                                  0.0%                 6494 STA.MARIA000  1     0.0     0.0     0.0
 6497    1  0   1.022     0.0     0.0     0.0     0.0     0.0     0.0
 STA.MARIA000  -131.3     0.0     0.0     0.0     0.0     0.0     0.0
                                                 43.5%                 6491 STA.MARIA230  1   -44.0     6.5    43.5
                                                 43.5%                 6492 STA.MARIA138  1    44.0    -6.5    43.5
                                                  0.0%                 6498 STA.MARIA013  1     0.0     0.0     0.0
 6498   14  0   1.022     0.0     0.0     0.0     0.0     0.0     0.0
 STA.MARIA013  -131.3     0.0     0.0     0.0     0.0     0.0     0.0
                                                  0.0%                 6497 STA.MARIA000  1     0.0     0.0     0.0
 6507  500  0   1.098     0.0     0.0     0.0     0.0     0.0     0.0
 MB-C4-BCS500  -109.9     0.0     0.0     0.0     0.0     0.0     0.0
```

```
                                                 0.0%                 6400 MARABA---500  1     0.0     0.0     0.0
                                                 0.0%                 6430 TUCURUI2-500  1     0.0     0.0     0.0
CEPEL - CENTRO DE PESQUISAS DE ENERGIA ELETRICA - PROGRAMA DE ANALISE DE REDES - V08MAR05A                          PAG. 491

ANUAL 06/07 * SETEMBRO 2006 PESADA S/SE 19H N/NE 19H * ANAT0 - FSE - C13
RELATORIO COMPLETO DO SISTEMA * AREA 59 * *   ENORTE (AREA TUCURUI-BELEM)    *

X----------------- D A D O S  -  B A R R A -------------------------X------------ F L U X O S  -  C I R C U I T O S ------------X
 DA BARRA      TENSAO GERACAO INJ EQV  CARGA   ELO CC  SHUNT    MOTOR
 NUM. KV TIPO   MOD/     MW/     MW/     MW/     MW/   Mvar/     MW/
     NOME       ANG     Mvar    Mvar    Mvar    Mvar   EQUIV    Mvar  PARA BARRA                    FLUXOS
                                                FLUXO % SHUNT L        NUM.     NOME     NC     MW    Mvar  MVA/V_d   TAP  DEFAS TIE
X------------X-------X-------X-------X-------X-------X-------X-------X----X------------X--X-------X-------X-------X------X-----X---X

 6508    1  0   0.986     0.0     0.0     0.0     0.0     0.0     0.0
 MAR-ATR-2000  -111.7     0.0     0.0     0.0     0.0     0.0     0.0
                                                47.0%                 6400 MARABA---500  2  -178.1   -65.2   192.4
                                                40.9%                 6401 MARABA---230  2   169.2    65.0   183.8
                                                 9.6%                 6406 MARABA---013  2     8.9     0.2     9.0
 6509  500  0   1.093     0.0     0.0     0.0     0.0     0.0     0.0
 MB-C3-BCS500  -111.0     0.0     0.0     0.0     0.0     0.0     0.0                              -119.6 SHL
                                                16.9%                 6400 MARABA---500  1   361.0    69.2   336.2
                                                16.9%  -119.6         6430 TUCURUI2-500  1  -361.0   -69.2   336.2
 6510  500  0   1.099     0.0     0.0     0.0     0.0     0.0     0.0
 MB-C1-BCS500  -112.5     0.0     0.0     0.0     0.0     0.0     0.0
                                                29.3%                 6400 MARABA---500  1   639.9   -22.2   582.9
                                                29.3%                 6410 TUCURUI--500  1  -639.9    22.2   582.9
 6511  500  0   1.098     0.0     0.0     0.0     0.0     0.0     0.0
 MB-C2-BCS500  -112.5     0.0     0.0     0.0     0.0     0.0     0.0
                                                36.1%                 6400 MARABA---500  1   788.6   -14.6   718.5
                                                36.1%                 6410 TUCURUI--500  1  -788.6    14.6   718.5
 6512  500  0   1.057     0.0     0.0     0.0     0.0     0.0     0.0
 PD-C1-BCS500  -129.3     0.0     0.0     0.0     0.0     0.0     0.0
                                                46.6%                 5580 P.DUTRA--500  1   826.7   102.6   787.9                58
                                                46.6%                 6513 IZ-C1-BCS500  1  -826.7  -102.6   787.9
 6513  500  0   1.073     0.0     0.0     0.0     0.0     0.0     0.0
 IZ-C1-BCS500  -108.6     0.0     0.0     0.0     0.0     0.0     0.0
                                                47.8%                 5590 IMPERATR-500  1  -850.1   170.1   808.1                58
                                                47.8%                 6512 PD-C1-BCS500  1   850.1  -170.1   808.1
 6514  500  0   1.055     0.0     0.0     0.0     0.0     0.0     0.0
 PD-C2-BCS500  -129.4     0.0     0.0     0.0     0.0     0.0     0.0
                                                48.6%                 5580 P.DUTRA--500  1  1010.3   143.3   967.3                58
                                                48.6%                 6515 IZ-C2-BCS500  1 -1010.3  -143.3   967.3
 6515  500  0   1.077     0.0     0.0     0.0     0.0     0.0     0.0
 IZ-C2-BCS500  -108.5     0.0     0.0     0.0     0.0     0.0     0.0
                                                48.8%                 5590 IMPERATR-500  1 -1033.6   164.9   971.8                58
                                                48.8%                 6514 PD-C2-BCS500  1  1033.6  -164.9   971.8
 6517  500  0   1.074     0.0     0.0     0.0     0.0     0.0     0.0
 PD-C3-BCS500  -129.5     0.0     0.0     0.0     0.0     0.0     0.0                              -207.6 SHL
                                                45.5%                 5580 P.DUTRA--500  1   973.4   -33.0   906.9                58
                                                45.5%  -207.6         6702 AC-PD-BCS500  1  -973.4    33.0   906.9
CEPEL - CENTRO DE PESQUISAS DE ENERGIA ELETRICA - PROGRAMA DE ANALISE DE REDES - V08MAR05A                          PAG. 492

ANUAL 06/07 * SETEMBRO 2006 PESADA S/SE 19H N/NE 19H * ANAT0 - FSE - C13
RELATORIO COMPLETO DO SISTEMA * AREA 59 * *   ENORTE (AREA TUCURUI-BELEM)    *

X----------------- D A D O S  -  B A R R A -------------------------X------------ F L U X O S  -  C I R C U I T O S ------------X
 DA BARRA      TENSAO GERACAO INJ EQV  CARGA   ELO CC  SHUNT    MOTOR
 NUM. KV TIPO   MOD/     MW/     MW/     MW/     MW/   Mvar/     MW/
     NOME       ANG     Mvar    Mvar    Mvar    Mvar   EQUIV    Mvar  PARA BARRA                    FLUXOS
```

```
                                                   FLUXO % SHUNT L          NUM.     NOME     NC     MW    Mvar  MVA/V_d   TAP  DEFAS TIE
X------------X-------X-------X-------X-------X-------X-------X-------X----X------------X--X-------X-------X-------X------X-----X---X

 6521  230  0   0.986     0.0     0.0     0.0     0.0     0.0     0.0
 ALTAMIRA-230  -111.5     0.0     0.0     0.0     0.0     0.0     0.0                                  -29.1 SHL
                                                 17.9%   -29.1         6416 TUC-ATR--230  1   -54.7    13.1    57.1
                                                 24.6%                 6528 ALTAMIRA1000  1    14.5     0.9    14.7
                                                 18.1%                 6531 TRANSAM.-230  1    40.2   -14.0    43.2
 6523   69  0   1.007     0.0     0.0    14.5     0.0     0.0     0.0
 ALTAMIRA-069  -113.2     0.0     0.0     0.5     0.0     0.0     0.0
                                                 24.0%                 6528 ALTAMIRA1000  1   -14.5    -0.5    14.4
 6525   14  0   0.984     0.0     0.0     0.0     0.0     0.0     0.0
 ALTAMIRA-013  -113.3     0.0     0.0     0.0     0.0     0.0     0.0
                                                  0.0%                 6528 ALTAMIRA1000  1     0.0     0.0     0.0
 6528    1  0   0.984     0.0     0.0     0.0     0.0     0.0     0.0
 ALTAMIRA1000  -113.3     0.0     0.0     0.0     0.0     0.0     0.0
                                                 24.6%                 6521 ALTAMIRA-230  1   -14.5    -0.5    14.7
                                                 24.6%                 6523 ALTAMIRA-069  1    14.5     0.5    14.7 0.977*
                                                  0.0%                 6525 ALTAMIRA-013  1     0.0     0.0     0.0
 6531  230  0   0.968     0.0     0.0     0.0     0.0     0.0     0.0
 TRANSAM.-230  -113.9     0.0     0.0     0.0     0.0     0.0     0.0                                  -28.1 SHL
                                                 17.5%   -28.1         6521 ALTAMIRA-230  1   -40.0    -6.9    41.9
                                                 16.6%                 6534 TRANSAM.-034  1     4.5     1.7     5.0 0.934*
                                                 15.5%                 6541 RUROP.---230  1    35.5     5.2    37.0
 6534   35  0   1.030     0.0     0.0     4.5     0.0     0.0     0.0
 TRANSAM.-034  -115.0     0.0     0.0     1.6     0.0     0.0     0.0
                                                 15.5%                 6531 TRANSAM.-230  1    -4.5    -1.6     4.6
 6541  230  0   0.943     0.0     0.0     0.0     0.0   -26.7     0.0
 RUROP.---230  -115.6     0.0     0.0     0.0     0.0     0.0     0.0                                  -26.7 SHL
                                                 16.9%   -26.7         6531 TRANSAM.-230  1   -35.2   -14.7    40.5
                                                 21.2%                 6548 RUROP.-1-000  1    19.9    -1.5    21.2
                                                 19.7%                 6549 RUROP.-2-000  1    15.3   -10.5    19.7
 6542  138  0   1.021    20.0     0.0    39.0     0.0     0.0     0.0
 RUROP.-1-138  -116.6     0.0     0.0    -2.5     0.0     0.0     0.0
                                                 18.8%                 6548 RUROP.-1-000  1   -19.0     2.5    18.8 1.081*
 6543   14  0   0.944     0.0     0.0     0.9     0.0     0.0     0.0
 RUROP.-1-013  -116.7     0.0     0.0     0.7     0.0     0.0     0.0
                                                  4.2%                 6548 RUROP.-1-000  1    -0.9    -0.7     1.2
 6544  138  0   0.993     0.0     0.0    15.3     0.0     0.0     0.0
 RUROP.-2-138  -116.3     0.0     0.0   -10.8     0.0     0.0     0.0
                                                 18.9%                 6549 RUROP.-2-000  1   -15.3    10.8    18.9 1.044*
CEPEL - CENTRO DE PESQUISAS DE ENERGIA ELETRICA - PROGRAMA DE ANALISE DE REDES - V08MAR05A                                   PAG. 493

ANUAL 06/07 * SETEMBRO 2006 PESADA S/SE 19H N/NE 19H * ANAT0 - FSE - C13
RELATORIO COMPLETO DO SISTEMA * AREA 59 * *   ENORTE (AREA TUCURUI-BELEM)    *

X----------------- D A D O S  -  B A R R A -------------------------X------------ F L U X O S  -  C I R C U I T O S ------------X
 DA BARRA      TENSAO GERACAO INJ EQV  CARGA   ELO CC  SHUNT    MOTOR
 NUM. KV TIPO   MOD/     MW/     MW/     MW/     MW/   Mvar/     MW/
     NOME       ANG     Mvar    Mvar    Mvar    Mvar   EQUIV    Mvar  PARA BARRA                    FLUXOS
                                                  FLUXO % SHUNT L          NUM.     NOME     NC     MW    Mvar  MVA/V_d   TAP  DEFAS TIE
X------------X-------X-------X-------X-------X-------X-------X-------X----X------------X--X-------X-------X-------X------X-----X---X

 6545   14  0   0.952     0.0     0.0     0.0     0.0     0.0     0.0
 RUROP.-2-013  -116.4     0.0     0.0     0.0     0.0     0.0     0.0
                                                  0.0%                 6549 RUROP.-2-000  1     0.0     0.0     0.0
 6548    1  0   0.945     0.0     0.0     0.0     0.0     0.0     0.0
 RUROP.-1-000  -116.6     0.0     0.0     0.0     0.0     0.0     0.0
                                                 21.2%                 6541 RUROP.---230  1   -19.9     1.8    21.2
                                                 20.3%                 6542 RUROP.-1-138  1    19.0    -2.5    20.3
```

```
                                                  4.2%                 6543 RUROP.-1-013  1     0.9     0.7     1.2
 6549    1  0   0.952     0.0     0.0     0.0     0.0     0.0     0.0
 RUROP.-2-000  -116.4     0.0     0.0     0.0     0.0     0.0     0.0
                                                 19.7%                 6541 RUROP.---230  1   -15.3    10.8    19.7
                                                 19.7%                 6544 RUROP.-2-138  1    15.3   -10.8    19.7
                                                  0.0%                 6545 RUROP.-2-013  1     0.0     0.0     0.0
 6561  230  0   1.055     0.0     0.0     0.0     0.0     0.0     0.0
 MB-CELPA-230  -112.2     0.0     0.0     0.0     0.0     0.0     0.0
                                                  0.0%                 6401 MARABA---230  1     0.0     0.0     0.0
                                                  0.0%                 6564 MB-CELPA-000  1     0.0     0.0     0.0
 6562  138  0   1.033     0.0     0.0     0.0     0.0     0.0     0.0
 MB-CELPA-138  -112.2     0.0     0.0     0.0     0.0     0.0     0.0
                                                  0.0%                 6564 MB-CELPA-000  1     0.0     0.0     0.0 0.978*
 6564    1  0   1.055     0.0     0.0     0.0     0.0     0.0     0.0
 MB-CELPA-000  -112.2     0.0     0.0     0.0     0.0     0.0     0.0
                                                  0.0%                 6561 MB-CELPA-230  1     0.0     0.0     0.0
                                                  0.0%                 6562 MB-CELPA-138  1     0.0     0.0     0.0
                                                  0.0%                 6565 MB-CELPA-013  1     0.0     0.0     0.0
 6565   14  0   1.033     0.0     0.0     0.0     0.0     0.0     0.0
 MB-CELPA-013  -112.2     0.0     0.0     0.0     0.0     0.0     0.0
                                                  0.0%                 6564 MB-CELPA-000  1     0.0     0.0     0.0 0.978*
 6700  500  0   1.098     0.0     0.0     0.0     0.0  -217.2     0.0
 ACAILAND.500  -115.3     0.0     0.0     0.0     0.0     0.0     0.0
                                                 17.6%                 5590 IMPERATR-500  1  -380.7   -51.1   349.7              58
                                                 28.3%                 6701 AC-MB-BCS500  1  -614.8   -70.5   563.4
                                                 45.7%                 6702 AC-PD-BCS500  1   995.6   -95.6   910.5
                                                  0.0%                 6703 AC-MB-BCS500  1     0.0     0.0     0.0
 6701  500  0   1.094     0.0     0.0     0.0     0.0     0.0     0.0                              -119.8 SHL
 AC-MB-BCS500  -117.6     0.0     0.0     0.0     0.0     0.0     0.0
                                                 28.3%  -119.8         6400 MARABA---500  1  -614.8   -45.5   563.4
                                                 28.3%                 6700 ACAILAND.500  1   614.8    45.5   563.4
CEPEL - CENTRO DE PESQUISAS DE ENERGIA ELETRICA - PROGRAMA DE ANALISE DE REDES - V08MAR05A                          PAG. 494

ANUAL 06/07 * SETEMBRO 2006 PESADA S/SE 19H N/NE 19H * ANAT0 - FSE - C13
RELATORIO COMPLETO DO SISTEMA * AREA 59 * *   ENORTE (AREA TUCURUI-BELEM)    *

X----------------- D A D O S  -  B A R R A -------------------------X------------ F L U X O S  -  C I R C U I T O S ------------X
 DA BARRA      TENSAO GERACAO INJ EQV  CARGA   ELO CC  SHUNT    MOTOR
 NUM. KV TIPO   MOD/     MW/     MW/     MW/     MW/   Mvar/     MW/
     NOME       ANG     Mvar    Mvar    Mvar    Mvar   EQUIV    Mvar  PARA BARRA                    FLUXOS
                                                FLUXO % SHUNT L         NUM.     NOME     NC     MW    Mvar  MVA/V_d   TAP  DEFAS TIE
X------------X-------X-------X-------X-------X-------X-------X-------X----X------------X--X-------X-------X-------X------X-----X---X

 6702  500  0   1.093     0.0     0.0     0.0     0.0     0.0     0.0
 AC-PD-BCS500  -109.5     0.0     0.0     0.0     0.0     0.0     0.0                              -215.2 SHL
                                                 45.7%  -215.2         6517 PD-C3-BCS500  1   995.6     5.5   910.5
                                                 45.7%                 6700 ACAILAND.500  1  -995.6    -5.5   910.5
 6703  500  0   1.098     0.0     0.0     0.0     0.0     0.0     0.0
 AC-MB-BCS500  -115.3     0.0     0.0     0.0     0.0     0.0     0.0
                                                  0.0%                 6400 MARABA---500  1     0.0     0.0     0.0
                                                  0.0%                 6700 ACAILAND.500  1     0.0     0.0     0.0


TOTAIS DA AREA 59


X--------X--------X--------X--------X--------X--------X--------X--------X
  GERACAO  INJ EQV   CARGA   ELO CC    SHUNT   EXPORT   IMPORT   PERDAS
    MW/      MW/      MW/      MW/     Mvar/     MW/      MW/      MW/
```

```
   Mvar     Mvar     Mvar     Mvar     EQUIV    Mvar     Mvar     Mvar
X--------X--------X--------X--------X--------X--------X--------X--------X

   3505.0      0.0   1097.1      0.0    -99.6   5168.3   2891.6    131.3
   -743.4      0.0    239.2      0.0      0.0    553.4    200.8  -1434.8
CEPEL - CENTRO DE PESQUISAS DE ENERGIA ELETRICA - PROGRAMA DE ANALISE DE REDES - V08MAR05A                                PAG. 495

ANUAL 06/07 * SETEMBRO 2006 PESADA S/SE 19H N/NE 19H * ANAT0 - FSE - C13
RELATORIO COMPLETO DO SISTEMA * AREA 61 * *         ALBRAS + ALUMAR          *

X----------------- D A D O S  -  B A R R A -------------------------X------------ F L U X O S  -  C I R C U I T O S ------------X
 DA BARRA      TENSAO GERACAO INJ EQV  CARGA   ELO CC  SHUNT    MOTOR
 NUM. KV TIPO   MOD/     MW/     MW/     MW/     MW/   Mvar/     MW/
     NOME       ANG     Mvar    Mvar    Mvar    Mvar   EQUIV    Mvar  PARA BARRA                    FLUXOS
                                                FLUXO % SHUNT L         NUM.     NOME     NC     MW    Mvar  MVA/V_d   TAP  DEFAS TIE
X------------X-------X-------X-------X-------X-------X-------X-------X----X------------X--X-------X-------X-------X------X-----X---X

 5551  230  0   1.021     0.0     0.0   107.0     0.0   360.8     0.0
 S.LUISII-230  -136.3     0.0     0.0    21.7     0.0     0.0     0.0
                                             31.3%                    5541 MIRANDA--230  1    62.2    40.9    72.9                58
                                             63.6%                    5550 S.LUISII-500  1  -386.4   -49.0   381.4                58
                                             63.6%                    5550 S.LUISII-500  2  -386.4   -49.0   381.4                58
                                             63.6%                    5550 S.LUISII-500  3  -386.4   -49.0   381.4                58
                                             21.4%                    5556 SAOLUIZ--1CS  1     0.0   -13.7    13.5 1.025F         58
                                              0.0%                    5557 UTS-01G2-0MQ  1     0.0     0.0     0.0 1.025F         58
                                             57.8%                    5561 S.LUIS-I-230  1   111.9    80.0   134.7                58
                                             57.8%                    5561 S.LUIS-I-230  2   111.9    80.0   134.7                58
                                              2.2%                    8001 ALUMAR-L1034  1   218.4    61.8   222.3
                                              2.9%                    8002 ALUMAR-L2034  1   274.1   100.7   286.0
                                              3.0%                    8003 ALUMAR-L3034  1   273.5   136.5   299.3
 6461  230  0   1.039     0.0     0.0   860.0     0.0   479.0     0.0
 V.CONDE--230  -122.9     0.0     0.0   211.8     0.0     0.0     0.0
                                             70.5%                    6460 V.CONDE--500  1  -497.6    46.4   481.1 0.966F         59
                                             70.5%                    6460 V.CONDE--500  2  -497.6    46.4   481.1 0.966F         59
                                             70.5%                    6460 V.CONDE--500  3  -497.6    46.4   481.1 0.966F         59
                                             55.8%                    6462 V.CONDE-2000  1    18.8     3.6    18.4 1.000F         59
                                             18.8%                    6465 VCONDE---2CS  1     0.0    62.4    60.1 1.050F         59
                                             55.8%                    6467 V.CONDE-1000  1    18.8     3.6    18.4 1.000F         59
                                             55.8%                    6468 V.CONDE-3000  1    18.8     3.6    18.4 1.000F         59
                                             48.0%                    6471 GUAMA----230  1   230.3    32.9   224.0                59
                                             48.0%                    6471 GUAMA----230  2   230.3    32.9   224.0                59
                                             20.0%                    6489 CASTANHAL     1   115.6   -10.9   111.8                59
 8001   35  0   1.027     0.0     0.0     0.0   218.4    20.3     0.0
 ALUMAR-L1034  -144.4     0.0     0.0     0.0    49.7     0.0     0.0
                                              2.1%                    5551 S.LUISII-230  1  -218.4   -29.4   214.5 1.036*
 8002   35  0   0.971     0.0     0.0     0.0   274.1    18.1     0.0
 ALUMAR-L2034  -146.7     0.0     0.0     0.0    65.2     0.0     0.0
                                              2.9%                    5551 S.LUISII-230  1  -274.1   -47.1   286.4 0.999*
 8003   35  0   0.651     0.0     0.0     0.0   273.5     8.1     0.0
 ALUMAR-L3034  -146.9     0.0     0.0     0.0    85.8     0.0     0.0
                                              4.4%                    5551 S.LUISII-230  1  -273.5   -77.7   436.7 0.685*
 8004    1  2   1.000  -219.1     0.0     0.0  -219.1     0.0     0.0
 ALU_BINF-1GR     0.0    86.2     0.0     0.0    86.2     0.0     0.0
 9518   88  0   1.012     0.0     0.0     0.0     0.0     0.0     0.0
 MARACAI-Y-88   -58.6     0.0     0.0     0.0     0.0     0.0     0.0
                                             71.3%                    1922 RANCHA-Y--88  1    31.6    -2.9    31.4                06
                                             31.7%                    9519 G.MARACAI-88  1   -31.6     2.9    31.4                72
CEPEL - CENTRO DE PESQUISAS DE ENERGIA ELETRICA - PROGRAMA DE ANALISE DE REDES - V08MAR05A                                PAG. 496

ANUAL 06/07 * SETEMBRO 2006 PESADA S/SE 19H N/NE 19H * ANAT0 - FSE - C13
```

```
TOTAIS DA AREA 61

X--------X--------X--------X--------X--------X--------X--------X--------X
  GERACAO  INJ EQV   CARGA   ELO CC    SHUNT   EXPORT   IMPORT   PERDAS
    MW/      MW/      MW/      MW/     Mvar/     MW/      MW/      MW/
   Mvar     Mvar     Mvar     Mvar     EQUIV    Mvar     Mvar     Mvar
X--------X--------X--------X--------X--------X--------X--------X--------X

   -219.1      0.0    967.0    546.9    886.4    943.2   2683.8      7.6
     86.2      0.0    233.5    286.9      0.0    384.5    164.0    231.7
CEPEL - CENTRO DE PESQUISAS DE ENERGIA ELETRICA - PROGRAMA DE ANALISE DE REDES - V08MAR05A                                PAG. 497

ANUAL 06/07 * SETEMBRO 2006 PESADA S/SE 19H N/NE 19H * ANAT0 - FSE - C13
RELATORIO COMPLETO DO SISTEMA * AREA 62 * *             SALGEMA             *

X----------------- D A D O S  -  B A R R A -------------------------X------------ F L U X O S  -  C I R C U I T O S ------------X
 DA BARRA      TENSAO GERACAO INJ EQV  CARGA   ELO CC  SHUNT    MOTOR
 NUM. KV TIPO   MOD/     MW/     MW/     MW/     MW/   Mvar/     MW/
     NOME       ANG     Mvar    Mvar    Mvar    Mvar   EQUIV    Mvar  PARA BARRA                    FLUXOS
                                                FLUXO % SHUNT L         NUM.     NOME     NC     MW    Mvar  MVA/V_d   TAP  DEFAS TIE
X------------X-------X-------X-------X-------X-------X-------X-------X----X------------X--X-------X-------X-------X------X-----X---X

 5115   14  0   1.000     0.0     0.0    91.2     0.0     0.0     0.0
 SGM----A-013  -160.9     0.0     0.0    34.9     0.0     0.0     0.0
                                             1.0%                 5110 SALGEMA--230  1   -91.2   -29.6    95.9                55
                                             0.1%                 5118 SGM---A1-013  1     0.0    -5.3     5.3 1.000F         55
 5116   14  0   1.000     0.0     0.0    54.7     0.0     0.0     0.0
 SGM----B-013  -156.7     0.0     0.0    20.9     0.0     0.0     0.0
                                             0.6%                 5110 SALGEMA--230  1   -54.7   -15.6    56.9                55
                                             0.1%                 5119 SGM---B1-013  1     0.0    -5.3     5.3 1.000F         55
 5117   14  0   1.000     0.0     0.0    54.7     0.0     0.0     0.0
 SGM----C-013  -155.5     0.0     0.0    20.9     0.0     0.0     0.0
                                             0.5%                 5110 SALGEMA--230  1   -54.7     0.0    54.7                55
                                             0.2%                 5120 SGM---C1-013  1     0.0   -20.9    20.9 1.000F         55


TOTAIS DA AREA 62

X--------X--------X--------X--------X--------X--------X--------X--------X
  GERACAO  INJ EQV   CARGA   ELO CC    SHUNT   EXPORT   IMPORT   PERDAS
    MW/      MW/      MW/      MW/     Mvar/     MW/      MW/      MW/
   Mvar     Mvar     Mvar     Mvar     EQUIV    Mvar     Mvar     Mvar
X--------X--------X--------X--------X--------X--------X--------X--------X

      0.0      0.0    200.6      0.0      0.0      0.0    200.6      0.0
      0.0      0.0     76.7      0.0      0.0      0.0     78.2      1.4
CEPEL - CENTRO DE PESQUISAS DE ENERGIA ELETRICA - PROGRAMA DE ANALISE DE REDES - V08MAR05A                                PAG. 498

ANUAL 06/07 * SETEMBRO 2006 PESADA S/SE 19H N/NE 19H * ANAT0 - FSE - C13
RELATORIO COMPLETO DO SISTEMA * AREA 63 * *      INTERLIGACAO NORTE-SUL      *

X----------------- D A D O S  -  B A R R A -------------------------X------------ F L U X O S  -  C I R C U I T O S ------------X
 DA BARRA      TENSAO GERACAO INJ EQV  CARGA   ELO CC  SHUNT    MOTOR
 NUM. KV TIPO   MOD/     MW/     MW/     MW/     MW/   Mvar/     MW/
```

```
     NOME       ANG     Mvar    Mvar    Mvar    Mvar   EQUIV    Mvar  PARA BARRA                    FLUXOS
                                               FLUXO % SHUNT L         NUM.     NOME     NC     MW    Mvar  MVA/V_d   TAP  DEFAS TIE
X------------X-------X-------X-------X-------X-------X-------X-------X----X------------X--X-------X-------X-------X------X-----X---X

 7100  500  0   1.087     0.0     0.0     0.0     0.0     0.0     0.0
 GURUPI---500  -103.6     0.0     0.0     0.0     0.0     0.0     0.0
                                            45.1%                 7101 GUR-SMA--500  1  -628.4   106.2   586.1
                                            52.1%                 7102 GUR-MIR--500  1   733.1   -71.0   677.3
                                            42.6%                 7103 GUR-SMA2-500  1  -594.5    91.2   553.0
                                            50.9%                 7104 GUR-MIR2-500  1   714.5   -82.8   661.4
                                             2.1%                 7112 PEIXEANG-500  1  -224.7   -43.5   210.5
 7101  500  0   1.098     0.0     0.0     0.0     0.0     0.0     0.0
 GUR-SMA--500  -106.5     0.0     0.0     0.0     0.0     0.0     0.0                              -164.0 SHL
                                            45.1%                 7100 GURUPI---500  1   628.4  -138.9   586.1
                                            45.1%  -164.0         7236 SMA-GUR--500  1  -628.4   138.9   586.1
 7102  500  0   1.083     0.0     0.0     0.0     0.0     0.0     0.0
 GUR-MIR--500  -100.2     0.0     0.0     0.0     0.0     0.0     0.0                              -159.6 SHL
                                            52.1%                 7100 GURUPI---500  1  -733.1    27.4   677.3
                                            52.1%  -159.6         7201 MIR-GUR--500  1   733.1   -27.4   677.3
 7103  500  0   1.097     0.0     0.0     0.0     0.0     0.0     0.0
 GUR-SMA2-500  -106.4     0.0     0.0     0.0     0.0     0.0     0.0                              -163.6 SHL
                                            42.6%                 7100 GURUPI---500  1   594.5  -120.3   553.0
                                            42.6%  -163.6         7237 SMA-GUR2-500  1  -594.5   120.3   553.0
 7104  500  0   1.082     0.0     0.0     0.0     0.0     0.0     0.0
 GUR-MIR2-500  -100.3     0.0     0.0     0.0     0.0     0.0     0.0                              -159.2 SHL
                                            50.9%                 7100 GURUPI---500  1  -714.5    41.2   661.4
                                            50.9%  -159.2         7203 MIR-GUR2-500  1   714.5   -41.2   661.4
 7110   14  1   1.040   225.0     0.0     0.0     0.0     0.0     0.0
 PeixeAng-2GR   -95.9   -21.2     0.0     0.0     0.0     0.0     0.0
                                            41.4%                 7111 PEIXEANG-138  1   225.0   -21.2   217.3
 7111  138  0   1.050     0.0     0.0     0.0     0.0     0.0     0.0
 PEIXEANG-138   -99.9     0.0     0.0     0.0     0.0     0.0     0.0
                                            41.4%                 7110 PeixeAng-2GR  1  -225.0    37.4   217.3 1.000F
                                            41.4%                 7112 PEIXEANG-500  1   225.0   -37.4   217.3
 7112  500  0   1.085     0.0     0.0     0.0     0.0   -70.7     0.0
 PEIXEANG-500  -102.6     0.0     0.0     0.0     0.0     0.0     0.0
                                             2.3%                 7100 GURUPI---500  1   225.0  -118.9   234.5
                                            40.4%                 7111 PEIXEANG-138  1  -225.0    48.2   212.0 1.025F
CEPEL - CENTRO DE PESQUISAS DE ENERGIA ELETRICA - PROGRAMA DE ANALISE DE REDES - V08MAR05A                                PAG. 499

ANUAL 06/07 * SETEMBRO 2006 PESADA S/SE 19H N/NE 19H * ANAT0 - FSE - C13
RELATORIO COMPLETO DO SISTEMA * AREA 63 * *      INTERLIGACAO NORTE-SUL      *

X----------------- D A D O S  -  B A R R A ------------------------X------------ F L U X O S  -  C I R C U I T O S ------------X
 DA BARRA      TENSAO GERACAO INJ EQV  CARGA   ELO CC  SHUNT    MOTOR
 NUM. KV TIPO   MOD/     MW/     MW/     MW/     MW/   Mvar/     MW/
     NOME       ANG     Mvar    Mvar    Mvar    Mvar   EQUIV    Mvar  PARA BARRA                    FLUXOS
                                               FLUXO % SHUNT L         NUM.     NOME     NC     MW    Mvar  MVA/V_d   TAP  DEFAS TIE
X------------X-------X-------X-------X-------X-------X-------X-------X----X------------X--X-------X-------X-------X------X-----X---X

 7200  500  0   1.077     0.0     0.0     0.0     0.0  -157.8     0.0
 MIRACEM--500  -106.4     0.0     0.0     0.0     0.0     0.0     0.0                              -315.5 SHL
                                            51.9%                 7201 MIR-GUR--500  1  -725.3   -38.9   674.4
                                            50.6%                 7203 MIR-GUR2-500  1  -706.5   -35.8   656.8
                                            16.2%                 7204 LAJEADO--500  1  -299.8    34.2   280.2
                                            57.6%                 7208 MIRACEMA-000  1   110.1   -19.0   103.7
                                            58.3%  -157.8         7301 COL-MIR--500  1   814.8   -47.3   757.8
                                            57.8%  -157.8         7303 COL-MIR2-500  1   806.8   -51.0   750.6
 7201  500  0   1.075     0.0     0.0     0.0     0.0     0.0     0.0
 MIR-GUR--500  -109.8     0.0     0.0     0.0     0.0     0.0     0.0                              -157.3 SHL
```

```
                                                 51.9%  -157.3         7102 GUR-MIR--500  1  -725.3     4.3   674.4
                                                 51.9%                 7200 MIRACEM--500  1   725.3    -4.3   674.4
 7202  138  0   1.020    40.0     0.0   150.1     0.0     0.0     0.0
 MIRACEMA-138  -110.2     0.0     0.0   -26.5     0.0     0.0     0.0
                                                 61.7%                 7208 MIRACEMA-000  1  -110.1    26.5   111.0 0.935*
 7203  500  0   1.076     0.0     0.0     0.0     0.0     0.0     0.0
 MIR-GUR2-500  -109.8     0.0     0.0     0.0     0.0     0.0     0.0                            -157.4 SHL
                                                 50.6%  -157.4         7104 GUR-MIR2-500  1  -706.5     5.3   656.8
                                                 50.6%                 7200 MIRACEM--500  1   706.5    -5.3   656.8
 7204  500  0   1.076     0.0     0.0     0.0     0.0     0.0     0.0
 LAJEADO--500  -105.8     0.0     0.0     0.0     0.0     0.0     0.0
                                                 16.6%                 7200 MIRACEM--500  1   300.0   -75.9   287.7
                                                 30.0%                 7207 LAJEADO--230  1  -300.0    75.9   287.7 1.050F
 7205   14  0   1.093     0.0     0.0     0.0     0.0     0.0     0.0
 MIRACEMA-013  -110.4     0.0     0.0     0.0     0.0     0.0     0.0
                                                  0.0%                 7208 MIRACEMA-000  1     0.0     0.0     0.0 1.000F
 7206    1  1   1.000   300.0     0.0     0.0     0.0     0.0     0.0
 LAJEADO--2GR   -98.4   -35.3     0.0     0.0     0.0     0.0     0.0
                                                 31.8%                 7207 LAJEADO--230  1   300.0   -35.3   302.1
 7207  230  0   1.016     0.0     0.0     0.0     0.0     0.0     0.0
 LAJEADO--230  -103.7     0.0     0.0     0.0     0.0     0.0     0.0
                                                 31.5%                 7204 LAJEADO--500  1   300.0   -64.2   302.1
                                                 31.8%                 7206 LAJEADO--2GR  1  -300.0    64.2   302.1 1.000F
 7208    1  0   1.093     0.0     0.0     0.0     0.0     0.0     0.0
 MIRACEMA-000  -110.4     0.0     0.0     0.0     0.0     0.0     0.0
                                                 57.6%                 7200 MIRACEM--500  1  -110.1    27.0   103.7
                                                 57.6%                 7202 MIRACEMA-138  1   110.1   -27.0   103.7
                                                  0.0%                 7205 MIRACEMA-013  1     0.0     0.0     0.0
CEPEL - CENTRO DE PESQUISAS DE ENERGIA ELETRICA - PROGRAMA DE ANALISE DE REDES - V08MAR05A                                PAG. 500

ANUAL 06/07 * SETEMBRO 2006 PESADA S/SE 19H N/NE 19H * ANAT0 - FSE - C13
RELATORIO COMPLETO DO SISTEMA * AREA 63 * *      INTERLIGACAO NORTE-SUL      *

X----------------- D A D O S  -  B A R R A -------------------------X------------- F L U X O S  -  C I R C U I T O S -------------X
 DA BARRA      TENSAO GERACAO INJ EQV  CARGA   ELO CC  SHUNT    MOTOR
 NUM. KV TIPO   MOD/     MW/     MW/     MW/     MW/   Mvar/     MW/
     NOME       ANG     Mvar    Mvar    Mvar    Mvar   EQUIV    Mvar  PARA BARRA                    FLUXOS
                                                FLUXO % SHUNT L         NUM.     NOME     NC     MW    Mvar  MVA/V_d   TAP  DEFAS TIE
X------------X-------X-------X-------X-------X-------X-------X-------X----X------------X--X-------X-------X-------X------X-----X---X

 7236  500  0   1.067     0.0     0.0     0.0     0.0     0.0     0.0
 SMA-GUR--500   -98.0     0.0     0.0     0.0     0.0     0.0     0.0                            -154.9 SHL
                                                                     CSC  235 S.MESA---500  1  -634.7   185.9   619.7                01
                                                 47.7%  -154.9         7101 GUR-SMA--500  1   634.7  -185.9   619.7
 7237  500  0   1.067     0.0     0.0     0.0     0.0     0.0     0.0
 SMA-GUR2-500   -98.1     0.0     0.0     0.0     0.0     0.0     0.0                            -154.8 SHL
                                                                     CSC  235 S.MESA---500  1  -600.5   188.5   589.9                01
                                                 45.4%  -154.8         7103 GUR-SMA2-500  1   600.5  -188.5   589.9
 7300  500  0   1.088     0.0     0.0     0.0     0.0  -161.0     0.0
 COLINAS--500  -110.1     0.0     0.0     0.0     0.0     0.0     0.0
                                                 57.3%                 7301 COL-MIR--500  1  -807.9   -52.6   744.1
                                                 57.8%                 7302 COL-IPZ--500  1   816.3   -22.6   750.6
                                                 56.7%                 7303 COL-MIR2-500  1  -799.7   -54.8   736.7
                                                 56.0%                 7304 COL-IPZ2-500  1   791.2   -30.9   727.8
 7301  500  0   1.086     0.0     0.0     0.0     0.0     0.0     0.0
 COL-MIR--500  -113.8     0.0     0.0     0.0     0.0     0.0     0.0
                                                 57.3%                 7200 MIRACEM--500  1  -807.9     0.1   744.1
                                                 57.3%                 7300 COLINAS--500  1   807.9    -0.1   744.1
 7302  500  0   1.088     0.0     0.0     0.0     0.0     0.0     0.0
 COL-IPZ--500  -106.4     0.0     0.0     0.0     0.0     0.0     0.0                            -322.2 SHL
```

```
                                                   57.8%                 7300 COLINAS--500  1  -816.3   -30.9   750.6
                                                   57.8%  -322.2         7591 IPZ-COL--500  1   816.3    30.9   750.6
 7303  500  0   1.085     0.0     0.0     0.0     0.0     0.0     0.0
 COL-MIR2-500  -113.8     0.0     0.0     0.0     0.0     0.0     0.0
                                                   56.7%                 7200 MIRACEM--500  1  -799.7    -3.1   736.7
                                                   56.7%                 7300 COLINAS--500  1   799.7     3.1   736.7
 7304  500  0   1.088     0.0     0.0     0.0     0.0     0.0     0.0
 COL-IPZ2-500  -106.5     0.0     0.0     0.0     0.0     0.0     0.0                                -321.7 SHL
                                                   56.0%                 7300 COLINAS--500  1  -791.2   -19.5   727.8
                                                   26.7%  -321.7         7593 IPZ-COL2-500  1   791.2    19.5   727.8
 7591  500  0   1.097     0.0     0.0     0.0     0.0     0.0     0.0
 IPZ-COL--500  -120.3     0.0     0.0     0.0     0.0     0.0     0.0                                -163.6 SHL
                                                   56.4%  -163.6         7302 COL-IPZ--500  1  -803.9    21.3   733.1
                                                   51.3%                 7592 IPZ-COL--500  1   803.9   -21.3   733.1
 7592  500  0   1.097     0.0     0.0     0.0     0.0     0.0     0.0
 IPZ-COL--500  -116.7     0.0     0.0     0.0     0.0     0.0     0.0
                                                                     CSC 5590 IMPERATR-500  1   803.9    29.8   733.1              58
                                                   51.3%                 7591 IPZ-COL--500  1  -803.9   -29.8   733.1
CEPEL - CENTRO DE PESQUISAS DE ENERGIA ELETRICA - PROGRAMA DE ANALISE DE REDES - V08MAR05A                                   PAG. 501

ANUAL 06/07 * SETEMBRO 2006 PESADA S/SE 19H N/NE 19H * ANAT0 - FSE - C13
RELATORIO COMPLETO DO SISTEMA * AREA 63 * *      INTERLIGACAO NORTE-SUL      *

X----------------- D A D O S  -  B A R R A -------------------------X------------ F L U X O S  -  C I R C U I T O S -------------X
 DA BARRA      TENSAO GERACAO INJ EQV  CARGA   ELO CC  SHUNT    MOTOR
 NUM. KV TIPO   MOD/     MW/     MW/     MW/     MW/   Mvar/     MW/
     NOME       ANG     Mvar    Mvar    Mvar    Mvar   EQUIV    Mvar  PARA BARRA                    FLUXOS
                                                FLUXO % SHUNT L         NUM.     NOME     NC     MW    Mvar  MVA/V_d   TAP  DEFAS TIE
X------------X-------X-------X-------X-------X-------X-------X-------X----X------------X--X-------X-------X-------X------X-----X---X

 7593  500  0   1.096     0.0     0.0     0.0     0.0     0.0     0.0
 IPZ-COL2-500  -120.1     0.0     0.0     0.0     0.0     0.0     0.0                                -163.3 SHL
                                                   26.1%  -163.3         7304 COL-IPZ2-500  1  -778.7    11.0   710.7
                                                    7.1%                 7594 IPZ-COL2-500  2   778.7   -11.0   710.7
 7594  500  0   1.097     0.0     0.0     0.0     0.0     0.0     0.0
 IPZ-COL2-500  -116.6     0.0     0.0     0.0     0.0     0.0     0.0
                                                                     CSC 5590 IMPERATR-500  1   778.7    37.1   710.7              58
                                                    7.1%                 7593 IPZ-COL2-500  2  -778.7   -37.1   710.7


TOTAIS DA AREA 63


X--------X--------X--------X--------X--------X--------X--------X--------X
  GERACAO  INJ EQV   CARGA   ELO CC    SHUNT   EXPORT   IMPORT   PERDAS
    MW/      MW/      MW/      MW/     Mvar/     MW/      MW/      MW/
   Mvar     Mvar     Mvar     Mvar     EQUIV    Mvar     Mvar     Mvar
X--------X--------X--------X--------X--------X--------X--------X--------X

    565.0      0.0    150.1      0.0   -389.4   1582.7   1235.2     67.4
    -56.6      0.0    -26.5      0.0      0.0    507.7      0.0   -927.2
CEPEL - CENTRO DE PESQUISAS DE ENERGIA ELETRICA - PROGRAMA DE ANALISE DE REDES - V08MAR05A                                   PAG. 502

ANUAL 06/07 * SETEMBRO 2006 PESADA S/SE 19H N/NE 19H * ANAT0 - FSE - C13
RELATORIO COMPLETO DO SISTEMA * AREA 64 *

X----------------- D A D O S  -  B A R R A -------------------------X------------ F L U X O S  -  C I R C U I T O S -------------X
 DA BARRA      TENSAO GERACAO INJ EQV  CARGA   ELO CC  SHUNT    MOTOR
 NUM. KV TIPO   MOD/     MW/     MW/     MW/     MW/   Mvar/     MW/
```

```
     NOME       ANG     Mvar    Mvar    Mvar    Mvar   EQUIV    Mvar  PARA BARRA                    FLUXOS
                                                FLUXO % SHUNT L         NUM.     NOME     NC     MW    Mvar  MVA/V_d   TAP  DEFAS TIE
X------------X-------X-------X-------X-------X-------X-------X-------X----X------------X--X-------X-------X-------X------X-----X---X

  936  230  0   1.018     0.0     0.0     0.0     0.0     0.0     0.0
 BGrande--230   -42.2     0.0     0.0     0.0     0.0     0.0     0.0
                                            66.3%                 956 CNovos---230  1   479.7   -50.4   473.8              20
                                            93.8%                1150 B.GRANDE-3GR  1  -696.0    87.8   689.1 1.000F
                                            39.9%                1325 LVermelh-230  1   216.3   -37.4   215.7              23
  953  230  0   1.019     0.0     0.0     0.0     0.0     0.0     0.0
 CNovos-G-230   -47.4     0.0     0.0     0.0     0.0     0.0     0.0
                                            66.5%                 956 CNovos---230  1   396.0   -55.7   392.4              20
                                            66.5%                 956 CNovos---230  2   396.0   -55.7   392.4              20
                                            78.5%                1157 CNovos---3GR  1  -792.0   111.3   784.8 1.000F
 1150   14  1   1.010   696.0     0.0     0.0     0.0     0.0     0.0
 B.GRANDE-3GR   -34.9     0.8     0.0     0.0     0.0     0.0     0.0
                                            93.8%                 936 BGrande--230  1   696.0     0.8   689.1
 1157    1  1   1.010   792.0     0.0     0.0     0.0     0.0     0.0
 CNovos---3GR   -41.7   -31.9     0.0     0.0     0.0     0.0     0.0
                                            78.5%                 953 CNovos-G-230  1   792.0   -31.9   784.8
 1159    1  1   1.020   117.0     0.0     0.0     0.0     0.0     0.0
 MonClaro-2GR   -55.5   -17.8     0.0     0.0     0.0     0.0     0.0
                                            77.3%                1161 MClaro-G-230  1   117.0   -17.8   116.0
 1161  230  0   1.037     0.0     0.0     0.0     0.0     0.0     0.0
 MClaro-G-230   -60.6     0.0     0.0     0.0     0.0     0.0     0.0
                                            35.1%                 963 MClaro---230  1   116.9   -28.5   116.0              20
                                            77.3%                1159 MonClaro-2GR  1  -116.9    28.5   116.0 1.000F


TOTAIS DA AREA 64


X--------X--------X--------X--------X--------X--------X--------X--------X
  GERACAO  INJ EQV   CARGA   ELO CC    SHUNT   EXPORT   IMPORT   PERDAS
    MW/      MW/      MW/      MW/     Mvar/     MW/      MW/      MW/
   Mvar     Mvar     Mvar     Mvar     EQUIV    Mvar     Mvar     Mvar
X--------X--------X--------X--------X--------X--------X--------X--------X

   1605.0      0.0      0.0      0.0      0.0   1592.6      0.0     12.4
    -48.9      0.0      0.0      0.0      0.0      0.0    299.3    250.5
```





```
X----------------- D A D O S  -  B A R R A -------------------------X------------ F L U X O S  -  C I R C U I T O S ------------X
 DA BARRA      TENSAO GERACAO INJ EQV  CARGA   ELO CC  SHUNT    MOTOR
 NUM. KV TIPO   MOD/     MW/     MW/     MW/     MW/   Mvar/     MW/
     NOME       ANG     Mvar    Mvar    Mvar    Mvar   EQUIV    Mvar  PARA BARRA                    FLUXOS
                                                FLUXO % SHUNT L         NUM.     NOME     NC     MW    Mvar  MVA/V_d   TAP  DEFAS TIE
X------------X-------X-------X-------X-------X-------X-------X-------X----X------------X--X-------X-------X-------X------X-----X---X

 3340    1 -1   1.030     7.4     0.0    59.2     0.0     7.6     0.0
 JAP-------69  -127.1     0.0     0.0    13.7     0.0     0.0     0.0
                                             0.5%                1753 FRIBURGO  69  1   -51.8    -6.1    50.7              10
 3343    1  0   0.993     0.0     0.0     4.8     0.0     0.0     0.0
 CQT------138  -123.1     0.0     0.0     1.5     0.0     0.0     0.0
                                            23.8%                1751 MACABU   138  1    15.5   -13.5    20.7              10
                                            27.3%                1754 TERESOPOL138  1   -20.3    12.0    23.8              10
```

```
TOTAIS DA AREA 65

X--------X--------X--------X--------X--------X--------X--------X--------X
  GERACAO  INJ EQV   CARGA   ELO CC    SHUNT   EXPORT   IMPORT   PERDAS
    MW/      MW/      MW/      MW/     Mvar/     MW/      MW/      MW/
   Mvar     Mvar     Mvar     Mvar     EQUIV    Mvar     Mvar     Mvar
X--------X--------X--------X--------X--------X--------X--------X--------X

      7.4      0.0     64.0      0.0      7.6     15.5     72.3      0.2
      0.0      0.0     15.2      0.0      0.0     13.9     19.6     -1.9
CEPEL - CENTRO DE PESQUISAS DE ENERGIA ELETRICA - PROGRAMA DE ANALISE DE REDES - V08MAR05A                                PAG. 504

ANUAL 06/07 * SETEMBRO 2006 PESADA S/SE 19H N/NE 19H * ANAT0 - FSE - C13
RELATORIO COMPLETO DO SISTEMA * AREA 66 * *CONSUMIDOR LIVRE RIO GRANDE DO SUL*

X----------------- D A D O S  -  B A R R A -------------------------X------------ F L U X O S  -  C I R C U I T O S ------------X
 DA BARRA      TENSAO GERACAO INJ EQV  CARGA   ELO CC  SHUNT    MOTOR
 NUM. KV TIPO   MOD/     MW/     MW/     MW/     MW/   Mvar/     MW/
     NOME       ANG     Mvar    Mvar    Mvar    Mvar   EQUIV    Mvar  PARA BARRA                   FLUXOS
                                              FLUXO % SHUNT L         NUM.     NOME     NC     MW    Mvar  MVA/V_d   TAP  DEFAS TIE
X------------X-------X-------X-------X-------X-------X-------X-------X----X------------X--X-------X-------X-------X------X-----X---X

 1315  230  0   1.022     0.0     0.0    18.0     0.0     0.0     0.0
 Fibrapla-230   -66.1     0.0     0.0     7.7     0.0     0.0     0.0
                                             26.3%                 1210 Gravata2-230  1   -70.6   -16.4    70.9               23
                                             19.3%                 1231 Osorio2--230  1    52.6     8.7    52.2               23
 1337   35  0   1.000     0.0     0.0   152.0     0.0     0.0     0.0
 PoloP-Liv-34   -70.6     0.0     0.0    62.0     0.0     0.0     0.0
                                             73.0%                 1204 PoloPetr-230  1  -152.0   -62.0   164.2               23


TOTAIS DA AREA 66

X--------X--------X--------X--------X--------X--------X--------X--------X
  GERACAO  INJ EQV   CARGA   ELO CC    SHUNT   EXPORT   IMPORT   PERDAS
    MW/      MW/      MW/      MW/     Mvar/     MW/      MW/      MW/
   Mvar     Mvar     Mvar     Mvar     EQUIV    Mvar     Mvar     Mvar
X--------X--------X--------X--------X--------X--------X--------X--------X

      0.0      0.0    170.0      0.0      0.0     52.4    222.6      0.3
      0.0      0.0     69.7      0.0      0.0     15.7     78.4     -7.1
CEPEL - CENTRO DE PESQUISAS DE ENERGIA ELETRICA - PROGRAMA DE ANALISE DE REDES - V08MAR05A                                PAG. 505

ANUAL 06/07 * SETEMBRO 2006 PESADA S/SE 19H N/NE 19H * ANAT0 - FSE - C13
RELATORIO COMPLETO DO SISTEMA * AREA 68 * *CONSUMIDOR LIVRE PARANA           *

X----------------- D A D O S  -  B A R R A -------------------------X------------ F L U X O S  -  C I R C U I T O S ------------X
 DA BARRA      TENSAO GERACAO INJ EQV  CARGA   ELO CC  SHUNT    MOTOR
 NUM. KV TIPO   MOD/     MW/     MW/     MW/     MW/   Mvar/     MW/
     NOME       ANG     Mvar    Mvar    Mvar    Mvar   EQUIV    Mvar  PARA BARRA                   FLUXOS
                                              FLUXO % SHUNT L         NUM.     NOME     NC     MW    Mvar  MVA/V_d   TAP  DEFAS TIE
X------------X-------X-------X-------X-------X-------X-------X-------X----X------------X--X-------X-------X-------X------X-----X---X

 2496  230  0   1.037     0.0     0.0    18.0     0.0     0.0     0.0
```

```
 Cisa-----230   -73.2     0.0     0.0     7.7     0.0     0.0     0.0
                                                4.9%                 813 GralhAzu-230  1   -18.0    -7.7    18.9              21


TOTAIS DA AREA 68


X--------X--------X--------X--------X--------X--------X--------X--------X
  GERACAO  INJ EQV   CARGA   ELO CC    SHUNT   EXPORT   IMPORT   PERDAS
    MW/      MW/      MW/      MW/     Mvar/     MW/      MW/      MW/
   Mvar     Mvar     Mvar     Mvar     EQUIV    Mvar     Mvar     Mvar
X--------X--------X--------X--------X--------X--------X--------X--------X

      0.0      0.0     18.0      0.0      0.0      0.0     18.0      0.0
      0.0      0.0      7.7      0.0      0.0      0.0      7.7      0.0
CEPEL - CENTRO DE PESQUISAS DE ENERGIA ELETRICA - PROGRAMA DE ANALISE DE REDES - V08MAR05A                                PAG. 506

ANUAL 06/07 * SETEMBRO 2006 PESADA S/SE 19H N/NE 19H * ANAT0 - FSE - C13
RELATORIO COMPLETO DO SISTEMA * AREA 70 * *             CEEE-D              *

X----------------- D A D O S  -  B A R R A -------------------------X------------ F L U X O S  -  C I R C U I T O S ------------X
 DA BARRA      TENSAO GERACAO INJ EQV  CARGA   ELO CC  SHUNT    MOTOR
 NUM. KV TIPO   MOD/     MW/     MW/     MW/     MW/   Mvar/     MW/
     NOME       ANG     Mvar    Mvar    Mvar    Mvar   EQUIV    Mvar  PARA BARRA                    FLUXOS
                                                FLUXO % SHUNT L         NUM.     NOME     NC     MW    Mvar  MVA/V_d   TAP  DEFAS TIE
X------------X-------X-------X-------X-------X-------X-------X-------X----X------------X--X-------X-------X-------X------X-----X---X

 1189   69  0   1.002     0.0     0.0    39.2     0.0     0.0     0.0
 Bage2-----69   -67.6     0.0     0.0     1.8     0.0     0.0     0.0
                                                78.3%                1188 Bage2----230  1   -39.2    -1.8    39.2              23
 1195   69  0   1.002     0.0     0.0    56.1     0.0     0.0     0.0
 Camaqua---69   -72.6     0.0     0.0    11.9     0.0     0.0     0.0
                                                68.9%                1194 Camaqua--230  1   -56.1   -11.9    57.2              23
 1197   69  0   1.000     0.0     0.0    16.0     0.0     0.0     0.0
 Guaiba2---69   -68.8     0.0     0.0     6.8     0.0     0.0     0.0
                                                34.8%                1199 Guaiba2--230  1   -16.0    -6.8    17.4              23
 1202   69  0   1.002     0.0     0.0    18.0     0.0     0.0     0.0
 AFPiratin-69   -65.3     0.0     0.0     3.3     0.0     0.0     0.0
                                                20.7%                 951 Charquea-230  1   -18.0    -3.3    18.3              20
 1203   69  0   1.000     0.0     0.0    51.4     0.0     0.0     0.0
 Charquead-69   -68.8     0.0     0.0    23.5     0.0     0.0     0.0
                                                94.5%                 951 Charquea-230  1   -76.7   -32.2    83.2              20
                                                 0.1%                1208 Triunfo---69  1     9.7     3.2    10.2              31
                                                 0.2%                1304 Taquari---69  1    15.6     5.5    16.5              31
 1209   69  0   1.011     0.0     0.0    99.4     0.0     0.0     0.0
 Gravatai2-69   -71.3     0.0     0.0    28.6     0.0     0.0     0.0
                                                57.5%                1210 Gravata2-230  1   -92.0   -27.2    94.9              23
                                                59.8%                1210 Gravata2-230  2   -95.6   -28.3    98.7              23
                                                 1.1%                1224 GravatRGE-69  1   109.8     6.5   108.9              32
                                                30.7%                1271 PAlegre8--69  1   -10.8    10.2    14.7
                                                30.7%                1271 PAlegre8--69  2   -10.8    10.2    14.7
 1229  138  0   0.996     0.0     0.0     8.7     0.0     0.0     0.0
 Palmares-138   -73.0     0.0     0.0     2.7     0.0     0.0     0.0
                                                 6.1%                1234 Mostarda-138  1     4.3    -2.4     5.0
                                                15.9%                1244 Osorio2--138  1   -13.0    -0.3    13.1              23
 1232   69  0   1.026     0.0     0.0    87.6     0.0     0.0     0.0
 Osorio2---69   -70.3     0.0     0.0    22.5     0.0     0.0     0.0
                                                40.3%                1231 Osorio2--230  1   -33.6    -6.9    33.4              23
                                                40.3%                1231 Osorio2--230  2   -33.6    -6.9    33.4              23
```

```
                                                 40.2%                 1231 Osorio2--230  3   -33.5    -6.9    33.4                23
                                                 23.9%                 1244 Osorio2--138  1    13.1    -1.9    12.9 1.029*         23
 1233   69  0   0.992     0.0     0.0    22.7     0.0     0.0     0.0
 Pelotas1--69   -75.2     0.0     0.0     8.9     0.0     0.0     0.0
                                                  9.4%                 1245 Quinta----69  1    -4.2    -1.4     4.5
                                             SUP 100.4%                 2070 Pelotas1-138  1   -18.5    -7.5    20.1
CEPEL - CENTRO DE PESQUISAS DE ENERGIA ELETRICA - PROGRAMA DE ANALISE DE REDES - V08MAR05A                                PAG. 507

ANUAL 06/07 * SETEMBRO 2006 PESADA S/SE 19H N/NE 19H * ANAT0 - FSE - C13
RELATORIO COMPLETO DO SISTEMA * AREA 70 * *            CEEE-D              *

X----------------- D A D O S  -  B A R R A ------------------------X------------ F L U X O S  -  C I R C U I T O S ------------X
 DA BARRA      TENSAO GERACAO INJ EQV  CARGA   ELO CC  SHUNT    MOTOR
 NUM. KV TIPO   MOD/     MW/     MW/     MW/     MW/   Mvar/     MW/
     NOME       ANG     Mvar    Mvar    Mvar    Mvar   EQUIV    Mvar  PARA BARRA                    FLUXOS
                                                FLUXO % SHUNT L         NUM.     NOME     NC     MW    Mvar  MVA/V_d   TAP  DEFAS TIE
X------------X-------X-------X-------X-------X-------X-------X-------X----X------------X--X-------X-------X-------X------X-----X---X

 1234  138  0   0.994     0.0     0.0     4.3     0.0     0.0     0.0
 Mostarda-138   -73.5     0.0     0.0     1.7     0.0     0.0     0.0
                                                  5.7%                 1229 Palmares-138  1    -4.3    -1.7     4.7
 1238  138  0   1.020     0.0     0.0     4.3     0.0     0.0     0.0
 PMedici--138   -66.2     0.0     0.0     0.4     0.0     0.0     0.0
                                                 26.3%                 1239 PMedici--230  1   -30.9     3.2    30.5 0.972*         23
                                                 24.0%                 2057 Basilio--138  1    22.9    -3.9    22.8
                                                 12.1%                 9242 PMedici---69  1     3.7     0.3     3.6 0.990S
 1240  138  0   1.001     0.0     0.0     7.6     0.0     0.0     0.0
 Pelotas3-138   -70.0     0.0     0.0     0.6     0.0     0.0     0.0
                                                 55.1%                 1236 Pelotas3-230  1   -43.6   -14.1    45.8                23
                                                 55.1%                 1236 Pelotas3-230  2   -43.6   -14.1    45.8                23
                                                 10.5%                 2059 POsorioY-138  1    -8.7    -4.9    10.0
                                                 30.2%                 2074 Pelotas4-138  1    22.4     5.1    23.0
                                                 65.9%                 2075 PelotasY-138  1    65.8    27.4    71.2
 1245   69  0   1.002     0.0     0.0    70.0     0.0     0.0     0.0
 Quinta----69   -74.3     0.0     0.0    28.9     0.0     0.0     0.0
                                                  9.0%                 1233 Pelotas1--69  1     4.2     0.9     4.3
                                                 48.4%                 1322 Quinta---FIC  1   -74.2   -29.8    79.8                23
 1262   69  0   1.000     0.0     0.0    84.8     0.0     0.0     0.0
 PAlegre6--69   -71.8     0.0     0.0    14.8     0.0     0.0     0.0
                                                 73.8%                 1260 PAlegr6A-FIC  1   -61.0    -6.0    61.2 1.000F         23
                                                 73.6%                 1261 PAlegr6B-FIC  1   -60.8    -6.0    61.1 1.000F         23
                                                 46.8%                 9248 PAle12B-D-69  1    25.3     0.5    25.3
                                                 22.5%                 9249 PAle12A-D-69  1    11.7    -3.3    12.2
 1266   69  0   1.002     0.0     0.0    51.9     0.0     0.0     0.0
 PAlegre9--69   -69.7     0.0     0.0     5.4     0.0     0.0     0.0
                                                 34.6%                 1265 PAlegre9-FIC  1   -56.9    -6.4    57.1 1.000F         23
                                                  0.1%                 1272 PAleg9AES-69  1     5.0     1.3     5.2                31
                                                  0.1%                 1390 PAlegre7--69  1     0.0    -0.1     0.1
                                                  0.1%                 1390 PAlegre7--69  2     0.0    -0.1     0.1
 1269   69  0   1.000     0.0     0.0    60.7     0.0     0.0     0.0
 PAlegre10-69   -72.3     0.0     0.0    13.9     0.0     0.0     0.0
                                                 72.6%                 1268 PAlegr10-230  1   -54.7   -25.2    60.2                23
                                                  0.0%                 1268 PAlegr10-230  2     0.0     0.0     0.0                23
                                                 18.2%                 9248 PAle12B-D-69  1     5.7     8.0     9.8
                                                 22.4%                 9249 PAle12A-D-69  1   -11.7     3.3    12.1
CEPEL - CENTRO DE PESQUISAS DE ENERGIA ELETRICA - PROGRAMA DE ANALISE DE REDES - V08MAR05A                                PAG. 508

ANUAL 06/07 * SETEMBRO 2006 PESADA S/SE 19H N/NE 19H * ANAT0 - FSE - C13
RELATORIO COMPLETO DO SISTEMA * AREA 70 * *            CEEE-D              *
```

```
X----------------- D A D O S  -  B A R R A -------------------------X------------ F L U X O S  -  C I R C U I T O S ------------X
 DA BARRA      TENSAO GERACAO INJ EQV  CARGA   ELO CC  SHUNT    MOTOR
 NUM. KV TIPO   MOD/     MW/     MW/     MW/     MW/   Mvar/     MW/
     NOME       ANG     Mvar    Mvar    Mvar    Mvar   EQUIV    Mvar  PARA BARRA                    FLUXOS
                                                FLUXO % SHUNT L         NUM.     NOME     NC     MW    Mvar  MVA/V_d   TAP  DEFAS TIE
X------------X-------X-------X-------X-------X-------X-------X-------X----X------------X--X-------X-------X-------X------X-----X---X

 1271   69  0   1.001     0.0     0.0    69.0     0.0     0.0     0.0
 PAlegre8--69   -70.0     0.0     0.0    20.0     0.0     0.0     0.0
                                              31.1%                    1209 Gravatai2-69  1    10.9   -10.2    14.9
                                              31.1%                    1209 Gravatai2-69  2    10.9   -10.2    14.9
                                              54.7%                    1264 PAlegre8-230  1   -45.4     0.2    45.4              23
                                              54.7%                    1264 PAlegre8-230  2   -45.4     0.2    45.4              23
 1274  138  0   0.990     0.0     0.0    10.3     0.0     0.0     0.0
 SVPalmar-138   -73.5     0.0     0.0     4.1     0.0     0.0     0.0
                                              22.4%                    1285 Marmelei-138  1   -10.3    -4.1    11.2
 1285  138  0   0.998     0.0     0.0     1.6     0.0     0.0     0.0
 Marmelei-138   -72.6     0.0     0.0     0.5     0.0     0.0     0.0
                                              24.1%                    1247 Quinta---138  1   -12.0    -1.2    12.0              23
                                              20.8%                    1274 SVPalmar-138  1    10.4     0.7    10.4
 1352    1  0   1.000     0.0     0.0    31.1     0.0     0.0     0.0
 PAlegre9--13   -70.2     0.0     0.0     1.3     0.0     0.0     0.0
                                              51.9%                    1267 PAlegre9-230  1   -31.1    -1.3    31.1              23
 1380   69  0   1.000     0.0     0.0    22.4     0.0     0.0     0.0
 Pelotas4--69   -75.4     0.0     0.0     4.4     0.0     0.0     0.0
                                               1.1%                    1350 Canguçu--694  1     0.0    -0.9     0.9              23
                                              90.7%                    2074 Pelotas4-138  1   -22.4    -3.5    22.7
 1390   69  0   1.003     0.0     0.0     0.0     0.0     0.0     0.0
 PAlegre7--69   -69.7     0.0     0.0     0.0     0.0     0.0     0.0
                                               0.0%                    1266 PAlegre9--69  1     0.0     0.0     0.0
                                               0.0%                    1266 PAlegre9--69  2     0.0     0.0     0.0
 2053   69  0   0.999     0.0     0.0     3.5     0.0     0.0     0.0
 SJeronimo-69   -68.9     0.0     0.0     1.0     0.0     0.0     0.0
                                               7.6%                    1208 Triunfo---69  1    -3.5    -1.0     3.6              31
 2054    1  0   1.000     5.0     0.0     0.0     0.0     0.0     0.0
 SJeronimo-13   -59.8     0.0     0.0     0.0     0.0     0.0     0.0
                                              16.7%                     901 CHARQUEA-1GR  1     5.0     0.0     5.0              19
 2055  138  0   0.998     0.0     0.0    11.8     0.0     0.0     0.0
 SAPatrul-138   -69.9     0.0     0.0     4.5     0.0     0.0     0.0
                                               0.0%                    1244 Osorio2--138  1     0.0     0.0     0.0              23
                                              31.9%                    2094 Taquara--138  1   -24.8    -8.2    26.2              32
                                              75.3%                    9250 SAPatrul--23  1    13.0     3.7    13.5
 2056  138  0   1.006     0.0     0.0     3.0     0.0     0.0     0.0
 POsorio--138   -69.8     0.0     0.0     1.2     0.0     0.0     0.0
                                              14.5%                    2059 POsorioY-138  1   -13.9     0.7    13.8
                                              11.5%                    2073 ArroioGr-138  1    10.9    -1.9    11.0
CEPEL - CENTRO DE PESQUISAS DE ENERGIA ELETRICA - PROGRAMA DE ANALISE DE REDES - V08MAR05A                                PAG. 509

ANUAL 06/07 * SETEMBRO 2006 PESADA S/SE 19H N/NE 19H * ANAT0 - FSE - C13
RELATORIO COMPLETO DO SISTEMA * AREA 70 * *            CEEE-D              *

X----------------- D A D O S  -  B A R R A -------------------------X------------ F L U X O S  -  C I R C U I T O S ------------X
 DA BARRA      TENSAO GERACAO INJ EQV  CARGA   ELO CC  SHUNT    MOTOR
 NUM. KV TIPO   MOD/     MW/     MW/     MW/     MW/   Mvar/     MW/
     NOME       ANG     Mvar    Mvar    Mvar    Mvar   EQUIV    Mvar  PARA BARRA                    FLUXOS
                                                FLUXO % SHUNT L         NUM.     NOME     NC     MW    Mvar  MVA/V_d   TAP  DEFAS TIE
X------------X-------X-------X-------X-------X-------X-------X-------X----X------------X--X-------X-------X-------X------X-----X---X

 2057  138  0   1.011     0.0     0.0     0.0     0.0     0.0     0.0
 Basilio--138   -68.8     0.0     0.0     0.0     0.0     0.0     0.0
```

```
                                                 23.6%                 1238 PMedici--138  1   -22.7     0.0    22.4
                                                 23.6%                 2059 POsorioY-138  1    22.7     0.0    22.4
 2059  138  0   1.007     0.0     0.0     0.0     0.0     0.0     0.0
 POsorioY-138   -69.6     0.0     0.0     0.0     0.0     0.0     0.0
                                                  9.5%                 1240 Pelotas3-138  1     8.7     2.6     9.0
                                                 14.6%                 2056 POsorio--138  1    13.9    -1.4    13.8
                                                 23.6%                 2057 Basilio--138  1   -22.6    -1.2    22.5
 2070  138  0   0.990     0.0     0.0     0.0     0.0     0.0     0.0
 Pelotas1-138   -70.8     0.0     0.0     0.0     0.0     0.0     0.0
                                                 SUP  104.2%                 1233 Pelotas1--69  1    18.5     9.2    20.8 0.964*
                                                 19.3%                 2075 PelotasY-138  1   -18.5    -9.2    20.8
 2071  138  0   0.990     0.0     0.0    47.0     0.0     0.0     0.0
 Pelotas2-138   -70.9     0.0     0.0    18.4     0.0     0.0     0.0
                                                 47.2%                 2075 PelotasY-138  1   -47.0   -18.4    51.0
 2072  138  0   0.999     0.0     0.0     7.0     0.0     0.0     0.0
 Jaguarao-138   -71.1     0.0     0.0     2.6     0.0     0.0     0.0
                                                  7.8%                 2073 ArroioGr-138  1    -7.0    -2.6     7.5
 2073  138  0   1.003     0.0     0.0     3.8     0.0     0.0     0.0
 ArroioGr-138   -70.6     0.0     0.0     1.1     0.0     0.0     0.0
                                                 11.4%                 2056 POsorio--138  1   -10.8    -0.9    10.8
                                                  7.3%                 2072 Jaguarao-138  1     7.0    -0.2     7.0
 2074  138  0   0.998     0.0     0.0     0.0     0.0     0.0     0.0
 Pelotas4-138   -70.3     0.0     0.0     0.0     0.0     0.0     0.0
                                                 30.5%                 1240 Pelotas3-138  1   -22.4    -5.6    23.1
                                                 92.6%                 1380 Pelotas4--69  1    22.4     5.6    23.1 0.980*
 2075  138  0   0.994     0.0     0.0     0.0     0.0     0.0     0.0
 PelotasY-138   -70.5     0.0     0.0     0.0     0.0     0.0     0.0
                                                 66.1%                 1240 Pelotas3-138  1   -65.6   -27.0    71.4
                                                 19.0%                 2070 Pelotas1-138  1    18.5     8.6    20.5
                                                 47.1%                 2071 Pelotas2-138  1    47.1    18.4    50.9
 9241   23  0   1.000     0.0     0.0    12.7     0.0     0.0     0.0
 Eldorado--23   -68.1     0.0     0.0     4.3     0.0     0.0     0.0
                                                 26.8%                 1212 Eldorado-230  1   -12.7    -4.3    13.4               23
 9242   69  0   1.029     0.0     0.0     3.7     0.0     0.0     0.0
 PMedici---69   -66.9     0.0     0.0     0.3     0.0     0.0     0.0
                                                 12.0%                 1238 PMedici--138  1    -3.7    -0.3     3.6
CEPEL - CENTRO DE PESQUISAS DE ENERGIA ELETRICA - PROGRAMA DE ANALISE DE REDES - V08MAR05A                                PAG. 510

ANUAL 06/07 * SETEMBRO 2006 PESADA S/SE 19H N/NE 19H * ANAT0 - FSE - C13
RELATORIO COMPLETO DO SISTEMA * AREA 70 * *             CEEE-D               *

X------------------ D A D O S  -  B A R R A -------------------------X------------- F L U X O S  -  C I R C U I T O S -------------X
 DA BARRA       TENSAO GERACAO INJ EQV  CARGA   ELO CC  SHUNT    MOTOR
 NUM. KV TIPO   MOD/     MW/     MW/     MW/     MW/   Mvar/     MW/
     NOME       ANG     Mvar    Mvar    Mvar    Mvar   EQUIV    Mvar  PARA BARRA                    FLUXOS
                                                FLUXO % SHUNT L         NUM.     NOME     NC     MW    Mvar  MVA/V_d   TAP  DEFAS TIE
X------------X-------X-------X-------X-------X-------X-------X-------X----X------------X--X-------X-------X-------X------X-----X---X

 9243    1  0   1.000     0.0     0.0    93.8     0.0     0.0     0.0
 PAlegre4--13   -70.0     0.0     0.0    26.4     0.0     0.0     0.0
                                                 39.0%                 1259 PAlegre4-230  1   -93.8   -26.4    97.4               23
 9244    1  0   1.000     0.0     0.0    32.6     0.0     0.0     0.0
 PAlegre6--13   -71.1     0.0     0.0     6.7     0.0     0.0     0.0
                                                 66.5%                 1263 PAlegre6-230  1   -32.6    -6.7    33.3               23
 9245    1  0   1.001     0.0     0.0    37.7     0.0     0.0     0.0
 PAlegre10-13   -72.1     0.0     0.0    10.8     0.0     0.0     0.0
                                                 78.4%                 1268 PAlegr10-230  1   -37.7   -10.8    39.2               23
 9246    1  0   1.000     0.0     0.0    42.3     0.0     0.0     0.0
 PAlegre13-13   -69.6     0.0     0.0     9.1     0.0     0.0     0.0
                                                 21.6%                 1270 PAlegr13-230  1   -21.1    -4.5    21.6               23
```

```
                                                  43.2%                 1270 PAlegr13-230  2   -21.1    -4.5    21.6                23
 9247   69  0   0.994     0.0     0.0    30.8     0.0     0.0     0.0
 Palegre12-69   -72.7     0.0     0.0     8.2     0.0     0.0     0.0
                                                  59.4%                 9248 PAle12B-D-69  1   -30.8    -8.2    32.1
                                                   0.0%                 9249 PAle12A-D-69  1     0.0     0.0     0.0
 9248   69  0   0.997     0.0     0.0     0.0     0.0     0.0     0.0
 PAle12B-D-69   -72.4     0.0     0.0     0.0     0.0     0.0     0.0
                                                  46.8%                 1262 PAlegre6--69  1   -25.2    -0.3    25.3
                                                  18.3%                 1269 PAlegre10-69  1    -5.7    -8.1     9.9
                                                  59.4%                 9247 Palegre12-69  1    30.9     8.3    32.1
 9249   69  0   1.000     0.0     0.0     0.0     0.0     0.0     0.0
 PAle12A-D-69   -72.1     0.0     0.0     0.0     0.0     0.0     0.0
                                                  22.5%                 1262 PAlegre6--69  1   -11.7     3.3    12.1
                                                  22.5%                 1269 PAlegre10-69  1    11.7    -3.3    12.1
                                                   0.0%                 9247 Palegre12-69  1     0.0     0.0     0.0
 9250   23  0   1.000     0.0     0.0    13.0     0.0     0.0     0.0
 SAPatrul--23   -75.3     0.0     0.0     2.4     0.0     0.0     0.0
                                                  73.4%                 2055 SAPatrul-138  1   -13.0    -2.4    13.2 1.025*
CEPEL - CENTRO DE PESQUISAS DE ENERGIA ELETRICA - PROGRAMA DE ANALISE DE REDES - V08MAR05A                                PAG. 511

ANUAL 06/07 * SETEMBRO 2006 PESADA S/SE 19H N/NE 19H * ANAT0 - FSE - C13


TOTAIS DA AREA 70


X--------X--------X--------X--------X--------X--------X--------X--------X
  GERACAO  INJ EQV   CARGA   ELO CC    SHUNT   EXPORT   IMPORT   PERDAS
    MW/      MW/      MW/      MW/     Mvar/     MW/      MW/      MW/
   Mvar     Mvar     Mvar     Mvar     EQUIV    Mvar     Mvar     Mvar
X--------X--------X--------X--------X--------X--------X--------X--------X

      5.0      0.0   1159.8      0.0      0.0    158.2   1314.4      1.4
      0.0      0.0    303.0      0.0      0.0     18.7    305.2    -16.6
CEPEL - CENTRO DE PESQUISAS DE ENERGIA ELETRICA - PROGRAMA DE ANALISE DE REDES - V08MAR05A                                PAG. 512

ANUAL 06/07 * SETEMBRO 2006 PESADA S/SE 19H N/NE 19H * ANAT0 - FSE - C13
RELATORIO COMPLETO DO SISTEMA * AREA 72 *

X----------------- D A D O S  -  B A R R A -------------------------X------------ F L U X O S  -  C I R C U I T O S ------------X
 DA BARRA      TENSAO GERACAO INJ EQV  CARGA   ELO CC  SHUNT    MOTOR
 NUM. KV TIPO   MOD/     MW/     MW/     MW/     MW/   Mvar/     MW/
     NOME       ANG     Mvar    Mvar    Mvar    Mvar   EQUIV    Mvar  PARA BARRA                  FLUXOS
                                              FLUXO % SHUNT L         NUM.     NOME     NC     MW    Mvar  MVA/V_d   TAP  DEFAS TIE
X------------X-------X-------X-------X-------X-------X-------X-------X----X------------X--X-------X-------X-------X------X-----X---X

 9513   88  0   1.042     0.0     0.0     0.0     0.0     0.0     0.0
 COC.CANAA-88   -60.7     0.0     0.0     0.0     0.0     0.0     0.0
                                                  42.4%                 9510 COCAL-Y  -88  1    42.5   -10.5    42.0                06
                                                  49.9%                 9515 G.COCAL  -13  1   -12.5     3.6    12.5 1.000F
                                                  79.8%                 9517 G.CANAA  -13  1   -30.0     6.9    29.5 1.000F
 9515    1  1   1.030    12.5     0.0     0.0     0.0     0.0     0.0
 G.COCAL  -13   -58.1    -2.9     0.0     0.0     0.0     0.0     0.0
                                                  49.9%                 9513 COC.CANAA-88  1    12.5    -2.9    12.5
 9517    1  1   1.030    30.0     0.0     0.0     0.0     0.0     0.0
 G.CANAA  -13   -57.3    -5.1     0.0     0.0     0.0     0.0     0.0
                                                  79.8%                 9513 COC.CANAA-88  1    30.0    -5.1    29.5
 9519   88  0   1.022     0.0     0.0     0.0     0.0     0.0     0.0
 G.MARACAI-88   -56.8     0.0     0.0     0.0     0.0     0.0     0.0
```

```
                                                  31.7%                 9518 MARACAI-Y-88  1    32.0    -2.4    31.4                61
                                                  62.8%                 9520 G.MARACAI-13  1   -16.0     1.2    15.7
                                                  62.8%                 9520 G.MARACAI-13  2   -16.0     1.2    15.7
 9520    1  1   1.019    32.0     0.0     0.0     0.0     0.0     0.0
 G.MARACAI-13   -52.5     0.0     0.0     0.0     0.0     0.0     0.0
                                                  62.8%                 9519 G.MARACAI-88  1    16.0     0.0    15.7 1.000F
                                                  62.8%                 9519 G.MARACAI-88  2    16.0     0.0    15.7 1.000F


TOTAIS DA AREA 72

X--------X--------X--------X--------X--------X--------X--------X--------X
  GERACAO  INJ EQV   CARGA   ELO CC    SHUNT   EXPORT   IMPORT   PERDAS
    MW/      MW/      MW/      MW/     Mvar/     MW/      MW/      MW/
   Mvar     Mvar     Mvar     Mvar     EQUIV    Mvar     Mvar     Mvar
X--------X--------X--------X--------X--------X--------X--------X--------X

     74.5      0.0      0.0      0.0      0.0     74.5      0.0      0.0
     -8.0      0.0      0.0      0.0      0.0      0.0     12.9      4.9
CEPEL - CENTRO DE PESQUISAS DE ENERGIA ELETRICA - PROGRAMA DE ANALISE DE REDES - V08MAR05A                                PAG. 513

ANUAL 06/07 * SETEMBRO 2006 PESADA S/SE 19H N/NE 19H * ANAT0 - FSE - C13
RELATORIO DE TOTAIS DE AREA

X----X--------X--------X--------X--------X--------X--------X--------X--------X
 AREA  GERACAO  INJ EQV   CARGA   ELO CC    SHUNT   EXPORT   IMPORT   PERDAS
 NUM.    MW/      MW/      MW/      MW/     Mvar/     MW/      MW/      MW/
        Mvar     Mvar     Mvar     Mvar     EQUIV    Mvar     Mvar     Mvar
X----X--------X--------X--------X--------X--------X--------X--------X--------X

    1   6744.0      0.0    171.8    204.2   7407.1  26499.0  20821.5    690.5
       -1462.2      0.0      1.4   5313.7      0.0   4518.3   3015.8   -943.5

    2   4291.4      0.0   2438.6      0.0    733.5   6448.6   4795.3    199.5
        -407.1      0.0    822.5      0.0      0.0   1310.4    552.5  -1295.1

    3    580.0      0.0   4410.6      0.0    575.7    579.5   4498.8     88.8
           1.1      0.0   1304.9      0.0      0.0    241.0    970.9      1.9

    4      0.0      0.0      0.0      0.0   1141.2  12002.4  12058.6     56.2
           0.0      0.0      0.0      0.0      0.0   2981.1   2186.8    346.9

    5      1.0      0.0      0.0      0.0    -35.8  11923.2  12313.1    390.9
         -38.5      0.0      0.0      0.0      0.0   3534.3   1244.6  -2363.9

    6      0.0      0.0      0.0      0.0    210.5   4444.5   4536.7     92.2
           0.0      0.0      0.0      0.0      0.0   1314.4   1003.8   -100.1

    7    255.0      0.0   4109.7      0.0    260.7    107.6   4035.2     72.9
           2.0      0.0   1528.4      0.0      0.0     73.3   1296.7    -42.4

    8   6076.8      0.0    154.0      0.0      0.0   6534.8    612.0      0.0
        -641.6      0.0     65.6      0.0      0.0    202.9    910.1      0.0

    9    654.0      0.0   4130.1      0.0    336.8    726.1   4236.0     33.8
         235.7      0.0    834.8      0.0      0.0    584.4    516.8   -329.9

   10     56.0      0.0   1649.6      0.0    438.1    327.9   1945.1     23.5
```

| | | | | | | | | |
|---|---|---|---|---|---|---|---|---|
| | 2.0 | 0.0 | 636.6 | 0.0 | 0.0 | 86.5 | 298.0 | 15.0 |
| 11 | 176.5 | 0.0 | 1325.9 | 0.0 | 445.3 | 0.0 | 1180.1 | 30.7 |
| | -14.9 | 0.0 | 367.7 | 0.0 | 0.0 | 71.1 | 34.2 | 25.8 |
| 12 | 526.0 | 0.0 | 1444.1 | 0.0 | 268.4 | 301.0 | 1256.6 | 37.4 |
| | -28.4 | 0.0 | 558.3 | 0.0 | 0.0 | 48.0 | 442.2 | 76.0 |
| 13 | 128.0 | 0.0 | 764.1 | 0.0 | 239.3 | 102.1 | 758.9 | 20.7 |
| | 12.2 | 0.0 | 324.9 | 0.0 | 0.0 | 29.9 | 209.1 | 105.8 |
| 14 | 2098.0 | 0.0 | 0.0 | 0.0 | 0.0 | 2098.0 | 0.0 | 0.0 |
| | 69.8 | 0.0 | 0.0 | 0.0 | 0.0 | 282.3 | 212.4 | 0.0 |
| 15 | 1847.0 | 0.0 | 3.0 | 0.0 | 0.0 | 1844.0 | 0.0 | 0.0 |
| | 106.6 | 0.0 | 1.3 | 0.0 | 0.0 | 209.4 | 104.1 | 0.0 |
| 16 | 0.0 | 0.0 | 7.2 | 0.0 | 0.0 | 0.0 | 7.2 | 0.0 |
| | 0.0 | 0.0 | -6.8 | 0.0 | 0.0 | 6.8 | 0.0 | 0.0 |



ANUAL 06/07 * SETEMBRO 2006 PESADA S/SE 19H N/NE 19H * ANAT0 - FSE - C13
RELATORIO DE TOTAIS DE AREA

| AREA NUM. | GERACAO MW/ Mvar | INJ EQV MW/ Mvar | CARGA MW/ Mvar | ELO CC MW/ Mvar | SHUNT Mvar/ EQUIV | EXPORT MW/ Mvar | IMPORT MW/ Mvar | PERDAS MW/ Mvar |
|---|---|---|---|---|---|---|---|---|
| 17 | 12079.3 | 0.0 | 722.0 | 0.0 | 0.0 | 11347.8 | 0.0 | 9.4 |
| | 3538.7 | 0.0 | 339.0 | 0.0 | 0.0 | 1425.9 | 0.0 | 1773.8 |
| 18 | 207.5 | 0.0 | 210.3 | 0.0 | 38.0 | 0.1 | 7.4 | 4.5 |
| | 9.8 | 0.0 | 82.0 | 0.0 | 0.0 | 0.0 | 15.5 | -18.8 |
| 19 | 5449.0 | 0.0 | 35.3 | 0.0 | 0.0 | 5413.0 | 5.0 | 5.7 |
| | -410.7 | 0.0 | 15.9 | 0.0 | 0.0 | 38.8 | 1185.0 | 719.6 |
| 20 | 0.0 | 0.0 | 46.5 | 0.0 | -642.2 | 11438.6 | 11739.3 | 254.2 |
| | 24.8 | 0.0 | 1.2 | 0.0 | 0.0 | 3562.9 | 690.6 | -3490.9 |
| 21 | 0.0 | 0.0 | 0.0 | 0.0 | 14.2 | 8219.1 | 8256.7 | 37.6 |
| | 0.0 | 0.0 | 0.0 | 0.0 | 0.0 | 1328.0 | 1605.3 | 291.6 |
| 22 | 203.8 | 0.0 | 3655.8 | 0.0 | 712.8 | 46.5 | 3573.4 | 74.9 |
| | 0.0 | 0.0 | 1532.3 | 0.0 | 0.0 | 151.5 | 877.6 | -93.4 |
| 23 | 784.0 | 0.0 | 0.0 | 0.0 | 155.6 | 4048.4 | 3339.6 | 75.2 |
| | 60.3 | 0.0 | 0.0 | 0.0 | 0.0 | 818.4 | 470.2 | -132.3 |
| 24 | 155.0 | 0.0 | 15.5 | 0.0 | 0.0 | 139.5 | 0.0 | 0.0 |
| | -0.4 | 0.0 | 7.7 | 0.0 | 0.0 | 0.0 | 8.2 | 0.0 |
| 25 | 75.7 | 0.0 | 2439.1 | 0.0 | 243.6 | 139.5 | 2551.2 | 48.3 |
| | 12.0 | 0.0 | 334.7 | 0.0 | 0.0 | 225.1 | 283.0 | -21.3 |
| 26 | 66.7 | 0.0 | 574.3 | 0.0 | 52.9 | 211.1 | 761.9 | 43.2 |
| | -2.2 | 0.0 | 139.1 | 0.0 | 0.0 | 105.1 | 79.3 | -114.2 |

| | | | | | | | | |
|---|---|---|---|---|---|---|---|---|
| 27 | 34.0 | 0.0 | 19.0 | 0.0 | 0.0 | 611.8 | 603.1 | 6.3 |
| | 210.9 | 0.0 | 0.0 | 0.0 | 0.0 | 209.6 | 31.9 | 33.2 |
| 28 | 0.0 | 0.0 | 7265.9 | 0.0 | 0.0 | 0.0 | 7268.6 | 2.7 |
| | 0.0 | 0.0 | 1988.1 | 0.0 | 0.0 | 0.0 | 2005.1 | 17.0 |
| 29 | 0.0 | 0.0 | 2083.5 | 0.0 | 0.0 | 0.0 | 2083.6 | 0.1 |
| | 0.0 | 0.0 | 385.9 | 0.0 | 0.0 | 13.3 | 400.3 | 1.1 |
| 30 | 12.7 | 0.0 | 2045.7 | 0.0 | 0.0 | 31.9 | 2066.9 | 2.0 |
| | 0.0 | 0.0 | 327.5 | 0.0 | 0.0 | 24.2 | 328.1 | -23.6 |
| 31 | 24.0 | 0.0 | 1102.3 | 0.0 | 0.0 | 20.1 | 1102.1 | 3.8 |
| | 0.0 | 0.0 | 194.9 | 0.0 | 0.0 | 22.2 | 210.1 | -6.9 |
| 32 | 59.9 | 0.0 | 1299.5 | 0.0 | 0.0 | 107.6 | 1354.7 | 7.5 |
| | 9.8 | 0.0 | 73.2 | 0.0 | 0.0 | 104.9 | 160.6 | -7.6 |



ANUAL 06/07 * SETEMBRO 2006 PESADA S/SE 19H N/NE 19H * ANAT0 - FSE - C13
RELATORIO DE TOTAIS DE AREA

| AREA NUM. | GERACAO MW/ Mvar | INJ EQV MW/ Mvar | CARGA MW/ Mvar | ELO CC MW/ Mvar | SHUNT Mvar/ EQUIV | EXPORT MW/ Mvar | IMPORT MW/ Mvar | PERDAS MW/ Mvar |
|---|---|---|---|---|---|---|---|---|
| 33 | 0.0 | 0.0 | 0.0 | 0.0 | 0.0 | 0.0 | 0.2 | 0.3 |
| | -108.6 | 0.0 | 0.0 | 0.0 | 0.0 | 66.9 | 45.6 | -129.9 |
| 34 | 540.0 | 0.0 | 10.0 | 0.0 | 0.0 | 530.0 | 0.0 | 0.0 |
| | 21.4 | 0.0 | 0.0 | 0.0 | 0.0 | 21.4 | 0.0 | 0.0 |
| 35 | 49.0 | 0.0 | 532.6 | 0.0 | 0.0 | 156.1 | 643.9 | 4.2 |
| | 0.0 | 0.0 | 176.1 | 0.0 | 0.0 | 62.4 | 237.0 | -1.5 |
| 36 | 13.5 | 0.0 | 240.8 | 0.0 | 0.0 | 0.0 | 227.3 | 0.0 |
| | 4.6 | 0.0 | 62.1 | 0.0 | 0.0 | 0.0 | 57.5 | 0.0 |
| 37 | 23.0 | 0.0 | 168.1 | 0.0 | 0.0 | 0.0 | 145.4 | 0.3 |
| | 8.2 | 0.0 | 45.3 | 0.0 | 0.0 | 0.0 | 39.3 | 2.2 |
| 38 | 4093.0 | 0.0 | 7.2 | 0.0 | 0.0 | 4085.8 | 0.0 | 0.0 |
| | -279.3 | 0.0 | 0.0 | 0.0 | 0.0 | 48.0 | 327.3 | 0.0 |
| 39 | 527.0 | 0.0 | 0.0 | 0.0 | 0.0 | 607.3 | 83.0 | 2.7 |
| | -55.3 | 0.0 | 0.0 | 0.0 | 0.0 | 18.2 | 90.6 | 17.2 |
| 41 | 2068.0 | 0.0 | 1177.7 | 0.0 | 16.3 | 2851.9 | 1972.4 | 10.8 |
| | -174.9 | 0.0 | 402.2 | 0.0 | 0.0 | 209.5 | 990.9 | 220.6 |
| 42 | 0.0 | 0.0 | 1895.8 | 0.0 | 0.0 | 328.7 | 2225.7 | 1.2 |
| | 0.0 | 0.0 | 377.1 | 0.0 | 0.0 | 41.6 | 423.3 | 4.6 |
| 44 | 1080.0 | 0.0 | 96.4 | 0.0 | 0.0 | 1012.1 | 28.5 | 0.0 |
| | 84.3 | 0.0 | 64.0 | 0.0 | 0.0 | 37.2 | 16.9 | 0.0 |
| 45 | 124.0 | 0.0 | 55.4 | 0.0 | 108.9 | 668.7 | 633.2 | 33.1 |
| | -8.4 | 0.0 | 15.9 | 0.0 | 0.0 | 120.6 | 104.2 | 70.8 |

| | | | | | | | | |
|---|---|---|---|---|---|---|---|---|
| 46 | 263.5 | 0.0 | 704.6 | 0.0 | 12.5 | 291.3 | 749.4 | 17.0 |
| | -51.7 | 0.0 | 182.7 | 0.0 | 0.0 | 18.1 | 116.1 | -123.9 |
| 51 | 4509.0 | 0.0 | 0.0 | 0.0 | 0.0 | 5150.2 | 668.5 | 27.3 |
| | -874.7 | 0.0 | 0.0 | 0.0 | 0.0 | 257.9 | 1189.6 | 57.0 |
| 52 | 0.0 | 0.0 | 74.0 | 0.0 | -1.0 | 0.0 | 74.1 | 0.1 |
| | 0.0 | 0.0 | 22.4 | 0.0 | 0.0 | 1.4 | 19.0 | -5.8 |
| 53 | 463.3 | 0.0 | 383.3 | 0.0 | -148.9 | 1033.6 | 986.9 | 33.3 |
| | -187.6 | 0.0 | 59.6 | 0.0 | 0.0 | 31.6 | 391.9 | 61.4 |
| 54 | 573.0 | 0.0 | 2745.4 | 0.0 | 32.5 | 0.0 | 2216.8 | 44.3 |
| | 136.9 | 0.0 | 591.8 | 0.0 | 0.0 | 718.0 | 0.0 | -1113.6 |



ANUAL 06/07 * SETEMBRO 2006 PESADA S/SE 19H N/NE 19H * ANAT0 - FSE - C13
RELATORIO DE TOTAIS DE AREA

| AREA NUM. | GERACAO MW/ Mvar | INJ EQV MW/ Mvar | CARGA MW/ Mvar | ELO CC MW/ Mvar | SHUNT Mvar/ EQUIV | EXPORT MW/ Mvar | IMPORT MW/ Mvar | PERDAS MW/ Mvar |
|---|---|---|---|---|---|---|---|---|
| 55 | 372.6 | 0.0 | 2845.9 | 0.0 | 118.5 | 200.6 | 2758.4 | 84.5 |
| | 47.4 | 0.0 | 744.3 | 0.0 | 0.0 | 462.7 | 0.0 | -1007.4 |
| 56 | 259.1 | 0.0 | 1380.5 | 0.0 | 105.5 | 89.6 | 1235.9 | 24.8 |
| | -15.7 | 0.0 | 284.3 | 0.0 | 0.0 | 182.1 | 84.8 | -447.6 |
| 57 | 157.0 | 0.0 | 691.2 | 0.0 | -104.7 | 900.2 | 1456.6 | 22.3 |
| | -3.8 | 0.0 | 237.5 | 0.0 | 0.0 | 57.6 | 185.7 | -217.8 |
| 58 | 0.0 | 0.0 | 661.1 | 0.0 | -308.5 | 4880.7 | 5574.3 | 32.5 |
| | 69.5 | 0.0 | 304.1 | 0.0 | 0.0 | 349.0 | 887.4 | -4.7 |
| 59 | 3505.0 | 0.0 | 1097.1 | 0.0 | -99.6 | 5168.3 | 2891.6 | 131.3 |
| | -743.4 | 0.0 | 239.2 | 0.0 | 0.0 | 553.4 | 200.8 | -1434.8 |
| 61 | -219.1 | 0.0 | 967.0 | 546.9 | 886.4 | 943.2 | 2683.8 | 7.6 |
| | 86.2 | 0.0 | 233.5 | 286.9 | 0.0 | 384.5 | 164.0 | 231.7 |
| 62 | 0.0 | 0.0 | 200.6 | 0.0 | 0.0 | 0.0 | 200.6 | 0.0 |
| | 0.0 | 0.0 | 76.7 | 0.0 | 0.0 | 0.0 | 78.2 | 1.4 |
| 63 | 565.0 | 0.0 | 150.1 | 0.0 | -389.4 | 1582.7 | 1235.2 | 67.4 |
| | -56.6 | 0.0 | -26.5 | 0.0 | 0.0 | 507.7 | 0.0 | -927.2 |
| 64 | 1605.0 | 0.0 | 0.0 | 0.0 | 0.0 | 1592.6 | 0.0 | 12.4 |
| | -48.9 | 0.0 | 0.0 | 0.0 | 0.0 | 0.0 | 299.3 | 250.5 |
| 65 | 7.4 | 0.0 | 64.0 | 0.0 | 7.6 | 15.5 | 72.3 | 0.2 |
| | 0.0 | 0.0 | 15.2 | 0.0 | 0.0 | 13.9 | 19.6 | -1.9 |
| 66 | 0.0 | 0.0 | 170.0 | 0.0 | 0.0 | 52.4 | 222.6 | 0.3 |
| | 0.0 | 0.0 | 69.7 | 0.0 | 0.0 | 15.7 | 78.4 | -7.1 |
| 68 | 0.0 | 0.0 | 18.0 | 0.0 | 0.0 | 0.0 | 18.0 | 0.0 |

| | | | | | | | | |
|---|---|---|---|---|---|---|---|---|
| | 0.0 | 0.0 | 7.7 | 0.0 | 0.0 | 0.0 | 7.7 | 0.0 |
| 70 | 5.0 | 0.0 | 1159.8 | 0.0 | 0.0 | 158.2 | 1314.4 | 1.4 |
| | 0.0 | 0.0 | 303.0 | 0.0 | 0.0 | 18.7 | 305.2 | -16.6 |
| 72 | 74.5 | 0.0 | 0.0 | 0.0 | 0.0 | 74.5 | 0.0 | 0.0 |
| | -8.0 | 0.0 | 0.0 | 0.0 | 0.0 | 0.0 | 12.9 | 4.9 |
| TOTAL | 63243.0 | 0.0 | 59620.1 | 751.1 | 12831.7 | 148087.7 | 148087.7 | 2871.7 |
| | -868.5 | 0.0 | 16349.2 | 5600.5 | 0.0 | 27722.0 | 27722.0 | -10093.8 |



ANUAL 06/07 * SETEMBRO 2006 PESADA S/SE 19H N/NE 19H * ANAT0 - FSE - C13
RELATORIO DE SHUNTS DE LINHA CA

| BARRA DE NUM. | NOME | TENSAO | SHUNT Mvar | BARRA PARA NUM. | NOME | TENSAO | SHUNT Mvar | NC |
|---|---|---|---|---|---|---|---|---|
| 60 | F.IGUACU-765 | 0.997 | -328.2 | 62 | IV-FOZ-1-765 | 1.039 | -162.0 | 1 |
| 60 | F.IGUACU-765 | 0.997 | -328.2 | 63 | IV-FOZ-2-765 | 1.039 | -161.8 | 1 |
| 60 | F.IGUACU-765 | 0.997 | -328.2 | 64 | IV-FOZ-3-765 | 1.035 | -160.8 | 1 |
| 69 | IV-ITA-1-765 | 1.038 | -355.2 | 72 | ITABERA--765 | 1.016 | -340.9 | 1 |
| 70 | IV-ITA-2-765 | 1.038 | -355.6 | 72 | ITABERA--765 | 1.016 | -340.9 | 1 |
| 71 | IV-ITA-3-765 | 1.037 | -354.9 | 72 | ITABERA--765 | 1.016 | -340.9 | 1 |
| 73 | ITA-TP-1-765 | 1.012 | | 76 | T.PRETO--765 | 0.968 | -309.2 | 1 |
| 74 | ITA-TP-2-765 | 1.013 | | 76 | T.PRETO--765 | 0.968 | -309.2 | 1 |
| 75 | ITA-TP-3-765 | 1.009 | | 76 | T.PRETO--765 | 0.968 | -309.2 | 1 |
| 100 | MARIMBON-500 | 1.078 | | 101 | ARARAQUA-500 | 1.085 | -86.0 | 1 |
| 100 | MARIMBON-500 | 1.078 | | 101 | ARARAQUA-500 | 1.085 | -86.0 | 2 |
| 101 | ARARAQUA-500 | 1.085 | -86.0 | 102 | POCOS----500 | 1.086 | | 1 |
| 101 | ARARAQUA-500 | 1.085 | -86.0 | 103 | CAMPINAS-500 | 1.076 | | 1 |
| 102 | POCOS----500 | 1.086 | -160.4 | 1503 | ITAJU3-5-500 | 1.093 | | 1 |
| 104 | C.PAULIS-500 | 1.090 | | 103 | CAMPINAS-500 | 1.076 | -157.4 | 1 |
| 125 | IBIUNA--CAP1 | 1.083 | -109.4 | 112 | Bateias500-1 | 1.039 | -165.5 | 1 |
| 130 | IBIUNA--CAP2 | 1.083 | -109.4 | 113 | Bateias500-2 | 1.039 | -165.5 | 1 |
| 210 | ITUMBIAR-500 | 1.086 | | 370 | SSIMAO---500 | 1.072 | -104.6 | 1 |
| 220 | CORUMBA--345 | 1.044 | | 219 | B.SUL----345 | 1.040 | -65.0 | 1 |
| 231 | R.VERDE--230 | 1.030 | | 4502 | B.PEIXE--230 | 1.017 | -20.7 | 1 |
| 231 | R.VERDE--230 | 1.030 | | 4502 | B.PEIXE--230 | 1.017 | -20.7 | 2 |
| 233 | SAMAMBAI-500 | 1.095 | -88.2 | 210 | ITUMBIAR-500 | 1.086 | | 1 |
| 233 | SAMAMBAI-500 | 1.095 | -88.2 | 320 | EMBORCAC-500 | 1.098 | -88.6 | 1 |
| 235 | S.MESA---500 | 1.079 | | 92 | SAMAMB--CAP1 | 1.077 | -85.2 | 1 |
| 235 | S.MESA---500 | 1.079 | -158.3 | 93 | SAMAMB--CAP2 | 1.092 | -162.3 | 1 |
| 235 | S.MESA---500 | 1.079 | -158.3 | 94 | SAMAMB--CAP3 | 1.092 | -162.3 | 1 |
| 235 | S.MESA---500 | 1.079 | -158.3 | 6444 | R.EGUAS--500 | 1.023 | -209.4 | 1 |
| 320 | EMBORCAC-500 | 1.098 | | 210 | ITUMBIAR-500 | 1.086 | -130.8 | 1 |
| 325 | JAGUARA--500 | 1.117 | -113.5 | 370 | SSIMAO---500 | 1.072 | -104.6 | 1 |
| 325 | JAGUARA--500 | 1.117 | -113.5 | 4050 | BDESPAC3-500 | 1.116 | | 1 |
| 325 | JAGUARA--500 | 1.117 | -113.5 | 4050 | BDESPAC3-500 | 1.116 | | 2 |
| 549 | CAPIVARA-440 | 1.039 | | 552 | ASSIS----440 | 1.030 | -95.6 | 1 |
| 896 | CascavOe-525 | 1.023 | | 999 | IvaiporE-525 | 1.030 | -106.1 | 1 |
| 933 | Areia----525 | 1.015 | | 955 | CNovos---525 | 1.030 | 0.0 | 1 |
| 959 | Curitiba-525 | 0.986 | 0.0 | 895 | Bateias--525 | 0.989 | | 1 |
| 972 | Garabi-1-525 | 0.992 | -224.1 | 1045 | SAngelo--525 | 1.013 | | 1 |
| 973 | Garabi-2-525 | 1.014 | -275.3 | 995 | Ita------525 | 1.025 | -157.7 | 1 |
| 978 | Guaira-F-230 | 1.023 | | 1086 | Dourados-230 | 1.013 | 0.0 | 1 |
| 1040 | CCC_BINF-1GR | 1.020 | | 970 | Garabi-2-500 | 1.018 | -85.8 | 1 |
| 1040 | CCC_BINF-1GR | 1.020 | | 971 | Garabi-1-500 | 1.018 | -85.8 | 1 |

```
 1045 SAngelo--525  1.013          995 Ita------525  1.025  -157.7  1
 4065 IRAPE----345  1.018          341 MCLAROS--345  1.021   -52.1  1
 4502 B.PEIXE--230  1.017         4522 RONDON.--230  1.018   -31.1  2
 4512 C.MAGAL. 230  1.059         4522 RONDON.--230  1.018   -31.1  1
 4522 RONDON.--230  1.018   -20.7 4502 B.PEIXE--230  1.017          1
 4522 RONDON.--230  1.018   -10.4 4521 ITIQUIRA-230  1.022          1
 4522 RONDON.--230  1.018         4532 COXIPO---230  1.020   -31.2  1
 4522 RONDON.--230  1.018         4532 COXIPO---230  1.020   -31.2  2
 4522 RONDON.--230  1.018   -10.4 4594 P.PEDRA--230  1.015          1
 4542 NOBRES---230  1.032         4552 N.MUTUM--230  1.007   -20.3  1
```



ANUAL 06/07 * SETEMBRO 2006 PESADA S/SE 19H N/NE 19H * ANAT0 - FSE - C13
RELATORIO DE SHUNTS DE LINHA CA

```
X-------------------------------X-------------------------------X--X
    BARRA DE                SHUNT    BARRA PARA              SHUNT
 NUM.     NOME     TENSAO   Mvar  NUM.     NOME     TENSAO   Mvar  NC
X----X------------X------X-------X----X------------X------X-------X--X

 4562 SORRISO--230  1.014         4582 SINOP----230  1.029   -21.2  1
 4862 JAURU----230  1.027   -31.7 4532 COXIPO---230  1.020   -31.2  1
 4862 JAURU----230  1.027   -31.7 4532 COXIPO---230  1.020   -31.2  2
 5001 P.AFONSO-500  1.074         5100 ANGELIM--500  1.044  -163.6  1
 5001 P.AFONSO-500  1.074         5740 OLINDINA-500  1.069  -171.3  1
 5050 L.GONZAG-500  1.077         5100 ANGELIM--500  1.044  -163.6  1
 5050 L.GONZAG-500  1.077  -232.1 5408 MILAGRES-500  1.081  -116.8  1
 5050 L.GONZAG-500  1.077         5740 OLINDINA-500  1.069  -171.3  1
 5050 L.GONZAG-500  1.077  -174.1 6300 SOBRAD.--500  1.070  -114.5  1
 5050 L.GONZAG-500  1.077  -174.1 6300 SOBRAD.--500  1.070  -171.7  2
 5060 XINGO----500  1.057         5100 ANGELIM--500  1.044  -163.6  1
 5060 XINGO----500  1.057         5300 MESSIAS--500  1.023  -157.0  1
 5060 XINGO----500  1.057         5720 JARDIM---500  1.068  -114.2  1
 5401 B.NOME---230  1.029         5411 MILAGRES-230  1.037   -10.8  1
 5401 B.NOME---230  1.029         5411 MILAGRES-230  1.037   -10.8  2
 5401 B.NOME---230  1.029         5411 MILAGRES-230  1.037   -10.8  3
 5411 MILAGRES-230  1.037         5421 BANABUIU-230  1.044   -10.9  1
 5411 MILAGRES-230  1.037         5421 BANABUIU-230  1.044   -10.9  2
 5421 BANABUIU-230  1.044         5452 FORTALEZ-230  1.038   -10.8  1
 5421 BANABUIU-230  1.044         5452 FORTALEZ-230  1.038   -10.8  3
 5428 QUIXADA  500  1.097  -180.5 5408 MILAGRES-500  1.081  -175.2  1
 5451 FTZ-II---500  1.080  -175.0 5428 QUIXADA  500  1.097          1
 5458 FTZ-II---230  1.038         5452 FORTALEZ-230  1.038   -10.8  1
 5458 FTZ-II---230  1.038         5452 FORTALEZ-230  1.038   -10.8  3
 5480 SOBRALIII500  1.087  -172.6 5451 FTZ-II---500  1.080  -175.0  1
 5480 SOBRALIII500  1.087  -177.3 5451 FTZ-II---500  1.080  -175.0  2
 5480 SOBRALIII500  1.087  -172.6 5500 TERES-II-500  1.066  -332.1  1
 5481 SOBRALII-230  1.028   -10.6 5491 PIRIPIRI-230  1.012          1
 5481 SOBRALII-230  1.028   -10.6 5651 CAUIPE---230  1.038          1
 5491 PIRIPIRI-230  1.012   -10.2 5501 TERESINA-230  1.034          1
 5500 TERES-II-500  1.066  -341.2 5480 SOBRALIII500  1.087  -177.3  2
 5501 TERESINA-230  1.034   -10.7 5511 B.ESPER.-230  1.043          1
 5501 TERESINA-230  1.034   -10.7 5511 B.ESPER.-230  1.043          2
 5510 B.ESPER.-500  1.075  -115.6 5574 BCSBEASJI500  1.083          1
 5510 B.ESPER.-500  1.075  -120.2 5580 P.DUTRA--500  1.076  -222.3  1
 5550 S.LUISII-500  1.029  -105.9 5580 P.DUTRA--500  1.076  -155.1  1
 5550 S.LUISII-500  1.029  -105.9 5580 P.DUTRA--500  1.076  -155.1  2
 5570 S.J.PIAUI500  1.106  -122.4 5572 BCSSJIUSB500  1.090          1
 5570 S.J.PIAUI500  1.106  -122.4 5574 BCSBEASJI500  1.083          1
 5572 BCSSJIUSB500  1.090         6300 SOBRAD.--500  1.070  -229.0  1
```

```
 5580 P.DUTRA--500  1.076  -169.0 5500 TERES-II-500  1.066  -111.5  1
 5580 P.DUTRA--500  1.076  -169.0 5500 TERES-II-500  1.066  -111.5  2
 5580 P.DUTRA--500  1.076  -172.5 6512 PD-C1-BCS500  1.057          1
 5580 P.DUTRA--500  1.076  -155.1 6514 PD-C2-BCS500  1.055          1
 5590 IMPERATR-500  1.100  -180.3 6400 MARABA---500  1.098  -157.9  1
 5590 IMPERATR-500  1.100  -121.0 6400 MARABA---500  1.098  -159.1  2
 5590 IMPERATR-500  1.100  -180.3 6513 IZ-C1-BCS500  1.073          1
 5590 IMPERATR-500  1.100  -158.5 6515 IZ-C2-BCS500  1.077          1
 5631 ICO------230  1.039         5421 BANABUIU-230  1.044   -10.9  1
 5720 JARDIM---500  1.068         5750 CAMACARI-500  1.050  -165.4  1
```



ANUAL 06/07 * SETEMBRO 2006 PESADA S/SE 19H N/NE 19H * ANAT0 - FSE - C13
RELATORIO DE SHUNTS DE LINHA CA

```
X-------------------------------X-------------------------------X--X
    BARRA DE                SHUNT    BARRA PARA              SHUNT
 NUM.     NOME     TENSAO   Mvar  NUM.     NOME     TENSAO   Mvar  NC
X----X------------X------X-------X----X------------X------X-------X--X

 5970 ITAPEBI--230  1.004         5972 EUNAPOLIS230  0.987    -9.7  1
 5970 ITAPEBI--230  1.004         5972 EUNAPOLIS230  0.987    -9.7  2
 6349 BJLAPAII-500  1.036  -160.9 6359 IBICOARA-500  1.030  -212.0  1
 6351 B.J.LAPA-230  1.000         6361 BARREIRAS230  0.935    -8.8  1
 6359 IBICOARA-500  1.030  -212.0 6369 SAPEACU--500  1.054  -166.6  1
 6400 MARABA---500  1.098  -160.3 6510 MB-C1-BCS500  1.099          1
 6400 MARABA---500  1.098  -157.9 6511 MB-C2-BCS500  1.098          1
 6400 MARABA---500  1.098         6701 AC-MB-BCS500  1.094  -119.8  1
 6400 MARABA---500  1.098         6703 AC-MB-BCS500  1.098     0.0  1
 6410 TUCURUI--500  1.075         6460 V.CONDE--500  1.071  -183.5  2
 6416 TUC-ATR--230  0.950         6521 ALTAMIRA-230  0.986   -29.1  1
 6430 TUCURUI2-500  1.099         6460 V.CONDE--500  1.071  -183.0  1
 6430 TUCURUI2-500  1.099         6507 MB-C4-BCS500  1.098     0.0  1
 6430 TUCURUI2-500  1.099         6509 MB-C3-BCS500  1.093  -119.6  1
 6444 R.EGUAS--500  1.023  -209.4 6349 BJLAPAII-500  1.036  -160.9  1
 6521 ALTAMIRA-230  0.986         6531 TRANSAM.-230  0.968   -28.1  1
 6531 TRANSAM.-230  0.968         6541 RUROP.---230  0.943   -26.7  1
 6702 AC-PD-BCS500  1.093  -215.2 6517 PD-C3-BCS500  1.074  -207.6  1
 7102 GUR-MIR--500  1.083  -159.6 7201 MIR-GUR--500  1.075  -157.3  1
 7103 GUR-SMA2-500  1.097  -163.6 7237 SMA-GUR2-500  1.067  -154.8  1
 7104 GUR-MIR2-500  1.082  -159.2 7203 MIR-GUR2-500  1.076  -157.4  1
 7200 MIRACEM--500  1.077  -157.8 7301 COL-MIR--500  1.086          1
 7200 MIRACEM--500  1.077  -157.8 7303 COL-MIR2-500  1.085          1
 7236 SMA-GUR--500  1.067  -154.9 7101 GUR-SMA--500  1.098  -164.0  1
 7302 COL-IPZ--500  1.088  -322.2 7591 IPZ-COL--500  1.097  -163.6  1
 7304 COL-IPZ2-500  1.088  -321.7 7593 IPZ-COL2-500  1.096  -163.3  1
```



ANUAL 06/07 * SETEMBRO 2006 PESADA S/SE 19H N/NE 19H * ANAT0 - FSE - C13
RELATORIO DE CONVERGENCIA

OPCOES ATIVADAS: QLIM VLIM CREM CTAP STEP NEWT CELO

```
X-----------X---------------X---------------X---------------X--X-------------------------------------------------------X
   ITERACAO   ERRO MAX BARRA  ERRO MAX BARRA  ERRO MAX  CONV
 FC  P  Q  V      MW    NUM.     Mvar   NUM.  TENSAO %  NUM. FM  BARRA(B), CIRCUITO(C) E CONVERSOR COM LIMITE VIOLADO
X--X--X--X--X---------X-----X---------X-----X---------X-----X--X-------------------------------------------------------X

  1           5300.00    85   2659.14    85
.................................................................
```

```
CONVERGENCIA FINAL

X----------X--------------X--------------X--------------X
   ITERACAO   ERRO MAX BARRA  ERRO MAX BARRA  ERRO MAX  CONV
 FC  P  Q  V      MW    NUM.     Mvar   NUM.  TENSAO %  NUM.
X--X--X--X--X---------X-----X---------X-----X---------X-----X

  1              0.00    85      0.00    85
     0  0  0     0.05  1107      0.00   442     0.000     0
```